APPENDIX 4A
SPORT RULES AND REGULATIONS

APPENDIX 4A: SPORT RULES AND REGULATIONS

Olympic Winter Games

1. Alpine Skiing: The International Ski Competition Rules (ICR), Book IV, Joint Regulations for Alpine Skiing, International Ski Federation (FIS), July 2016
2. Biathlon: Event and Competition Rules, International Biathlon Union (IBU), 2016
3. Bobsleigh: International Bobsleigh Rules, International Bobsleigh and Skeleton Federation (IBSF), June 2015
4. Cross-Country Skiing: The International Ski Competition Rules (ICR), Book II, Cross-Country, International Ski Federation (FIS), October 2013
5. Curling: The Rules of Curling and Rules of Competition, World Curling Federation, October 2016
6. Figure Skating: Special Regulations and Technical Rules - Single & Pair Skating and Ice Dance, International Skating Union, 2016
7. Freestyle Skiing: The International Freestyle Skiing Competition Rules (ICR), Book V, Joint Regulations for Freestyle Skiing, International Ski Federation (FIS), August 2015
8. Ice Hockey: Official Rule Book 2014-2018, International Ice Hockey Federation (IIHF), July 2015
9. Luge: International Luge Regulations for Artificial Track (IRO), International Luge Federation, 2016
10. Nordic Combined: The International Ski Competition Rules (ICR), Book VII, Nordic Combined, International Ski Federation (FIS), August 2016

11. Short Track Speed Skating: Special Regulations and Technical Rules – Speed Skating and Short Track Speed Skating, International Skating Union 2016
12. Skeleton: International Skeleton Rules, International Bobsleigh and Skeleton Federation (IBSF), September 2016
13. Ski Jumping: The International Ski Competition Rules (ICR), Book III, Ski Jumping, International Ski Federation (FIS), October 2013
14. Snowboard: The International Snowboard Competition Rules (ICR), Book VI, Joint Regulations for Snowboarding, International Ski Federation (FIS), November 2013
15. Speed Skating: *see Short Track Speed Skating*

Paralympic Winter Games

1. Para Alpine Skiing: Alpine Skiing Classification Rules and Regulations, International Paralympic Committee (IPC), August 2015
2. Para Biathlon: Nordic Skiing Classification Rules and Regulations – Cross-Country Skiing and Biathlon, International Paralympic Committee (IPC), August 2015
3. Para Cross-Country Skiing: *see Para Biathlon*
4. Para Ice Hockey: Ice Sledge Hockey Regulations 2016-2017, International Paralympic Committee (IPC), December 2016
5. Para Snowboard: Snowboard Rules and Regulations, International Paralympic Committee (IPC), December 2016
6. Wheelchair Curling: Classification Rules, Wheelchair Curling, World Curling Federation, October 2014

THE INTERNATIONAL

SKI COMPETITION RULES (ICR)

BOOK IV
JOINT REGULATIONS FOR ALPINE SKIING

DOWNHILL
SLALOM
GIANT SLALOM
SUPER-G
COMBINED EVENTS
TEAM EVENTS
PARALLEL EVENTS
KO EVENTS

APPROVED BY THE 50th INTERNATIONAL SKI CONGRESS, CANCUN (MEX)

July 2016

INTERNATIONAL SKI FEDERATION
FEDERATION INTERNATIONALE DE SKI
INTERNATIONALER SKI VERBAND

Blochstrasse 2; CH- 3653 Oberhofen / Thunersee; Switzerland

Telephone: +41 (33) 244 61 61
Fax: +41 (33) 244 61 71
Website: www.fisski.com

All rights reserved.
© Copyright: International Ski Federation FIS, Oberhofen, Switzerland, 2016.

Oberhofen, July 2016

Table of Content

	1st Section	**1**
200	Joint Regulations for all Competitions	1
201	Classification and Types of Competitions	1
202	FIS Calendar	3
203	Licence to participate in FIS Races (FIS Licence)	5
204	Qualification of Competitors	6
205	Competitors Obligations and Rights	7
206	Sponsorships and Advertising	8
207	Advertising and Commercial Markings	11
208	Exploitation of Electronic Media Rights	11
209	Film Rights	15
210	Organisation of Competition	16
211	The Organisation	16
212	Insurance	16
213	Programme	17
214	Announcements	17
215	Entries	18
216	Team Captains' Meetings	18
217	Draw	18
218	Publication of Results	19
219	Prizes	20
220	Team Officials, Coaches, Service Personnel, Suppliers and Firms' Representatives	21
221	Medical Services, Examinations and Doping	21
222	Competition Equipment	22
223	Sanctions	23
224	Procedural Guidelines	25
225	Appeals Commission	27
226	Violation of Sanctions	28
	2nd Section	**30**
	Rules Common to Alpine Events	30
600	Organisation	30
601	Organising Committee and Jury	30
602	The Technical Delegate (TD)	39
603	Course Setter	42
604	Accreditation / Rights and Duties of Team Officials	44
605	Forerunners	45
606	Competitors' Outfits (see Specifications for Competition Equipment)	46
607	Age Limits	47
608	Youth International Alpine Competitions	47
610	Start, Finish, Timing and Calculations	52
611	Technical Installations	52
612	Start and Finish Officials	55
613	The Start	56
614	Course and Competition	57
615	The Finish	60
616	Microphones	61

617 Calculation and Announcement of Results 61
618 FIS Race Points and Participation at FIS competitions 62
619 Award Ceremony 62

620 Start Order 62
621 Group Draw and Start Order 62
622 Start Intervals 65
623 Re-runs 65
624 Interruption of the Run or Training 66
625 Termination of a Competition 67
626 Report 67
627 Not Permitted to Start 67
628 Penalties 68
629 Disqualifications 68

640 Protests 69
641 Types of Protests 69
642 Place of Submittal 69
643 Deadlines for Submittal 69
644 Form of Protests 70
645 Authorisation 70
646 Settlement of Protests by the Jury 70
647 Right of Appeals 71

650 Rules regarding the Homologation of the Courses 71
655 Competitions under Artificial Light 76

660 Gate Judges' Instructions 76
661 Control of Passage (Explanation) 76
662 Importance of the Task of the Gate Judge 78
663 Giving Information to a Competitor 79
664 Immediate Announcement of Disqualifying Faults 79
665 Duties of the Gate Judge on completion of the 1st and 2nd run 79
666 Duties of the Gate Judge at the Conclusion of the Race 79
667 Supplemental Duties of the Gate Judge 79
668 Location and support of the Gate Judge 80
669 Number of Gate Judges 80

670 Video control 80
680 Poles 80
690 Gate Panels for Giant Slalom and Super-G 81

3rd Section **83**

Particular Rules for the different Events 83
700 Downhill 83
701 Technical Data 83
702 The Courses 84
703 Course Setting 84
704 Official Training 85
705 Yellow Flag 86
706 Execution of the Downhill 87
707 Crash Helmet 88

800 Slalom 88
801 Technical Data 88
802 The Courses 91
803 Course Setting 91

804 Single Pole Slalom 93
805 The Start 95
806 Execution of the Slalom 95
807 Crash Helmet 96

900 Giant Slalom 96
901 Technical Data 96
902 The Courses 97
903 Course Setting 97
904 Single Gate Giant Slalom 97
905 The Start 98
906 Execution of the Giant Slalom 98
907 Crash Helmet 98

1000 Super-G 98
1001 Technical Data 98
1002 The Courses 99
1003 Course Setting 100
1005 Start 100
1006 Execution of the Super-G 100
1007 Crash Helmet 101
1008 Yellow Flag 101

1100 Combined 101
1101 Alpine Combined 102
1102 Classical Combined 102
1103 Special forms of Combined events 102

1210 General Team Competitions 102
1211 Combined Team Event 103
1212 Alpine Team Event 103
1213 Special Cup Rules 105

1220 Parallel Events 105
1221 Definition 105
1222 Vertical Drop 105
1223 Choice and Preparation of the Course 105
1224 The Courses 106
1225 Distance between the Two Courses 106
1226 Start 106
1227 Finish 107
1228 Jury and Course Setter 107
1229 Timing 107

1230 Execution of a Parallel on Two Courses 107
1231 Control of the Runs 109
1232 Disqualifications / Did Not Finish 109
1233 Slalom Rules 109

1240 KO System 111
1241 Mode and time frame 111
1242 Results after the Intermediate Rounds and the Final 111

200 Joint Regulations for all Competitions

200.1 All events in the FIS Calendar must be held under the applicable FIS Rules[1].

200.2 Organisation and Conduct

Rules and instructions for the organisation and conduct of the various competitions are to be found in their respective rules.

200.3 Participation

Competitions listed in the FIS Calendar are only open to all properly licensed competitors entered by their National Ski Associations in accordance with current quotas.

200.4 Special Regulations

The FIS Council can authorise a National Ski Association to adopt rules and regulations to organise national or international competitions with different grounds for qualification but only provided that they do not go beyond the limits laid down in the present rules.

200.5 Control

All competitions listed in the FIS Calendar must be supervised by a Technical Delegate of the FIS.

200.6 Every legal sanction imposed and published in respect of a competitor, official or trainer will be recognised by the FIS and the National Ski Associations respectively.

201 Classification and Types of Competitions

201.1 Competitions with Special Rules and/or Limited Participation

National Ski Associations affiliated with the FIS - or clubs belonging to these National Ski Associations with the approval of their association - may invite neighbouring National Ski Associations or their clubs to their own competitions. These competitions must not be promulgated or announced as international competitions, and the limitation must be made clear in the announcement.

201.1.1 Competitions with special rules and/or limited participation or including non-members may be held under special competition rules as approved by the FIS Council. Any such rules must be published in the announcement.

201.2 Competitions with Non-Members of the FIS

The FIS Council can authorise one of its member National Ski Associations to invite a non-member organisation (military etc.) to competitions, or accept invitations from such an organisation.

[1] Throughout the ICR, the use of the masculine he/his, etc. also includes the feminine she/her, etc.

201.3 Classification of Competitions

201.3.1 Olympic Winter Games, FIS World Ski Championships and FIS World Junior Ski Championships

201.3.2 FIS World Cups

201.3.3 FIS Continental Cups

201.3.4 International FIS Competitions (FIS Races)

201.3.5 Competitions with Special Participation and/or Qualifications

201.3.6 Competitions with Non-Members of the FIS

201.4 FIS Disciplines

A discipline is a branch of a sport and may comprise one or several events. For example Cross-Country Skiing is a FIS Discipline, whereas the Cross-Country Sprint is an Event.

201.4.1 Recognition of Disciplines in the International Ski Federation

New disciplines, comprising one or several events, widely practised in at least twenty-five countries and on three continents may be included as part of the programme of the International Ski Federation.

201.4.2 Exclusion of Disciplines from the International Ski Federation

If a discipline is no longer practised in at least twelve National Ski Associations on at least two continents the FIS Congress may decide to exclude the discipline from the programme of the International Ski Federation.

201.5 FIS Events

An event is a competition in a sport or in one of its disciplines. It results in a ranking and gives rise to the award of medals and/or diplomas.

201.6 Types of Competitions

International competitions consist of:

201.6.1 Nordic Events

Cross-Country, Roller Skiing, Ski-Jumping, Ski-Flying, Nordic Combined, Team Competitions in Nordic Combined, Nordic Combined with Roller Skiing or In-line, Team Ski-Jumping, Ski-Jumping on plastic jumping hills, Popular Cross-Country races

201.6.2 Alpine Events

Downhill, Slalom, Giant Slalom, Super-G, Parallel Competitions, Combined, KO, Team Competitions

201.6.3 Freestyle Ski Events

Moguls, Dual Moguls, Aerials, Ski Cross, Halfpipe, Slopestyle, Big Air, Team Competitions

201.6.4 *Snowboard Events*
Slalom, Parallel Slalom, Giant Slalom, Parallel Giant Slalom, Super-G, Halfpipe, Snowboard Cross, Big Air, Slopestyle, Team Competitions

201.6.5 *Telemark Events*

201.6.6 *Firngleiten*

201.6.7 *Speed Skiing Events*
Speed 1 (S1), Speed Downhill (SDH), Speed Downhill Junior (SDH Jun)

201.6.8 *Grass Ski Events*

201.6.9 *Combined Events with other Sports*

201.6.10 *Youth, Masters, Para Snow Events, etc.*

201.7 FIS World Championship Programme

201.7.1 To be included in the programme of the FIS World Championships, events must have a recognised international standing both numerically and geographically, and have been included for at least two seasons in the World Cup before a decision about their admission can be considered.

201.7.2 Events are admitted no later than three years before specific FIS World Championships.

201.7.3 A single event cannot simultaneously give rise to both an individual and a team ranking.

201.7.4 Medals may only be awarded at the FIS World Championships and FIS Junior World Championships in all disciplines (Alpine, Nordic, Snowboard, Freestyle Ski, Grass Skiing, Rollerski, Telemark, Speed Skiing) when there are a minimum of 8 nations participating in team competitions and 8 nations represented in an individual event.

202 FIS Calendar

202.1 Candidature and Announcement

202.1.1 Each National Ski Association is entitled to present its candidature for the organising of the FIS World Ski Championships in accordance with the published "Rules for the Organisation of World Championships"

202.1.2 For all other competitions, the registrations for inclusion in the International Ski Calendar have to be made to FIS by the National Ski Association according to the Rules for the FIS Calendar Conference published by the FIS.

202.1.2.1 The applications of the National Ski Associations (NSA) are entered by using the FIS Calendar program in the members section of the FIS website: www.fis-ski.com by 31st August (31st May for the Southern Hemisphere).

202.1.2.2 *Allocation of competitions*

Allocation of the competitions to the National Ski Associations is made through the electronic communication process between FIS and the National Ski Associations. In the case of FIS World Cup competitions, the calendars are subject to the approval of the Council, on proposal of the respective Technical Committee.

202.1.2.3 *Homologations*

Competitions that appear in the FIS Calendar may only take place on competition courses or jumping hills homologated by the FIS.
The homologation certificate number must be indicated when applying for the inclusion of competition in the FIS Calendar.

202.1.2.4 *Publication of the FIS Calendar*

The FIS calendar is published by FIS on the FIS website www.fis-ski.com. It will be updated to reflect cancellations, postponements and other changes continuously by FIS.

202.1.2.5 *Postponements*

In case of the postponement of a competition listed in the FIS Calendar, the FIS has to be informed immediately and a new invitation must be sent to the National Ski Associations, otherwise the competition cannot be considered for FIS points.

202.1.2.6 *Calendar Fees*

In addition to the annual subscription, a calendar fee is set by the FIS Congress and is due for each year and for each event listed in the FIS Calendar. For additional events, a 50% surcharge will be made in addition to the regular calendar fee for applications submitted 30 days before the date of the competition. The calendar fee for a competition that has to be rescheduled remains the responsibility for payment in full of the original organising National Ski Association.

At the beginning of the season, each NSA will receive an invoice for 70 % of its total invoice from the previous season. This amount will be debited from its FIS account. At the end of the season each NSA will receive a detailed invoice for all registered competitions during the season. The balance will be subsequently be debited or credited to the NSA account at FIS.

202.1.3 *Appointment of Race Organiser*

In the event that the National Ski Association appoints a race organiser, such as an affiliated ski club, it shall do so using the form “Registration Form National Ski Association and Organiser” or by means of a similar written agreement. An application by a National Ski Association for inclusion of an event on the International Ski Calendar shall mean that the necessary agreement to organise the event has been established.

202.2 **Organisation of Races in other Countries**

Competitions which are organised by other National Ski Associations may only be included in the FIS Calendar when the National Ski Association of the country concerned where the competitions will be organised gives its approval.

203 Licence to participate in FIS Races (FIS Licence)

A licence to participate in FIS races is issued by a National Ski Association to competitors who fulfil the criteria for participation through registering the competitor with FIS in the respective discipline(s).

203.1 The FIS licence year begins on July 1st and finishes on June 30th of the following year.

203.2 To be eligible for participation in FIS events, a competitor must have a licence issued by his National Ski Association. Such a licence shall be valid in the Northern and Southern hemispheres for the licence year only. The validity of a licence can be limited to participation in one specific country or in one or more specific events.

203.2.1 The National Ski Association must guarantee that all competitors registered with a FIS License to participate in FIS races accept the Rules of the International Ski Federation, in particular the provision which foresees the exclusive competence of the Court of Arbitration for Sport as the court of appeal in doping cases.

203.3 A National Ski Association may only issue a FIS licence to participate in FIS races when the competitor has proven his nationality and therefore eligibility by submitting a copy of his passport and signed the Athletes Declaration in the form approved by the FIS Council and returned it to his National Ski Association. All forms from under-age applicants must be counter signed by their legal guardians. Both the copy of the passport and signed Athletes Declaration must be made available to FIS on request.

203.4 During the FIS licence year, a competitor may only participate in International FIS competitions with a FIS licence to participate in FIS races issued by one National Ski Association.

203.5 Application for a change of FIS Licence Registration

All applications to change licence registration from one member National Ski Association to another are subject to consideration by the FIS Council at its Meetings in the spring. In principle an application to change licence registration will not be granted unless the competitor demonstrates his personal association with the new nation.

Prior to submitting an application to change licence registration a competitor must possess the citizenship and passport of the country for which he wishes to compete. In addition, the competitor must have had his principal legal and effective place of residence in the new country for a minimum of two (2) years immediately prior to the date of the request to change registration to the new country/National Ski Association. An exception to the two year residency rule may be waived if the competitor was born in the territory of the new country, or whose mother or father is a national of the new country. Applications will not be accepted if a parent has obtained a passport for the new country, but is not resident, and/or there is no family ancestry.

Furthermore the competitor is required to submit a detailed explanation with the application about his personal circumstances and the reason for requesting a change of licence registration.

203.5.1 If a competitor has already participated in FIS calendar events for a National Ski Association, he must have the written agreement to be released from the former National Ski Association in addition to the citizenship, passport and residency requirements in art. 203.5 before the new National Ski Association may submit a request to FIS for a change of registration.
If such a written agreement is not given, the competitor may not participate in any FIS calendar events for a period of twelve months from the end of the last season in which he competed for his present National Ski Association, nor may he be issued with a licence to participate in FIS races by the new National Ski Association.
These rules are also valid when a competitor has more than one nationality and would like to change National Ski Association licence registration.

203.5.2 The FIS Council reserves the right in its absolute discretion, to grant or to decline to grant, a change of licence notwithstanding the fulfilment of the aforementioned conditions where it deems it is contrary to the spirit of the rule and in the best interests of the International Ski Federation to do so (e.g. to decline to grant a change of licence if a member National Ski Association tries to “import” a competitor).

203.5.3 In the event that a competitor does not fulfil all the criteria required to apply for a change of National Ski Association licence registration, the onus shall be on the competitor to demonstrate in writing to the satisfaction of the FIS Council that exceptional circumstances exist and it is in the best interests of the International Ski Federation to grant the change.

203.5.4 A competitor will retain his FIS points if he changes his National Ski Association under the condition that the former National Ski Association granted the release of the competitor.

203.5.5 In the event that any of the documents for an application to change licence registration submitted by the National Ski Association (letter of release from the former National Ski Association, passport, residency papers) are found to be false, the FIS Council will sanction the competitor and the new National Ski Association.

204 Qualification of Competitors

204.1 A National Ski Association shall not support or recognise within its structure, nor shall it issue a licence to participate in FIS or national races to any competitor who:

204.1.1 has conducted himself in an improper or unsportsmanlike manner or has not respected the FIS medical code or anti-doping rules,

204.1.2 accepts or has accepted, directly or indirectly, any money-payments for the participation at competitions,

204.1.3 accepts or has accepted a prize of a higher value than fixed by article 219,

204.1.4 permits or has permitted his name, title or individual picture to be used for advertising, except when the National Ski Association concerned, or its pool for this purpose, is party to the contract for sponsorship, equipment or advertisements.

204.1.5 knowingly competes or has competed against any skier not eligible according to the FIS Rules, except if:

204.1.5.1 the competition is approved by the FIS Council, is directly controlled by the FIS or by a National Ski Association, and the competition is announced "open",

204.1.6 has not signed the Athletes Declaration,

204.1.7 is under suspension.

204.2 With the issuance of a licence to participate in FIS competitions and entry the National Ski Association confirms, that valid and sufficient accident insurance for training and competition is in place for the competitor and assumes full responsibility.

205 Competitors Obligations and Rights

Competitors whatever their age, gender, race, religion or belief, sexual orientation, ability or disability have the right to participate in snow sports in a secure environment and protected from abuse.

FIS encourages all member nations to develop policies to safeguard and promote the welfare of children and young persons

205.1 The competitors are obliged to make themselves familiar with the appropriate FIS Rules and must comply with the additional instructions of the Jury. Competitors must also follow the FIS rules regulations.

205.2 Competitors are not permitted to use doping. (see FIS Anti-Doping Rules and Procedural Guidelines).

205.3 As stated in the Athletes Declaration, competitors have the right to inform the Jury of safety concerns they may have regarding the training and competition courses. More details are given in the corresponding discipline rules.

205.4 Competitors who do not attend the prize-giving ceremonies without excuse lose their claim to any prize including prize money.
In exceptional circumstances, the competitor may be represented by another member of his team, but this person has no right to take his place on the podium.

205.5 Competitors must behave in a correct and sportsmanlike manner towards members of the Organising Committee, volunteers, officials and the public.

205.6 Support for the Competitors

205.6.1 A competitor is registered with FIS by his National Ski Association to participate in FIS races may accept:

205.6.2 full compensation for travel cost to training and competition,

205.6.3 full reimbursement for accommodation during training and competitions,

205.6.4 pocket money,

205.6.5 compensation for loss of income according to decisions of his National Ski Association,

205.6.6 social security including insurance for training and competition,

205.6.7 scholarships.

205.7 A National Ski Association may reserve funds to secure a competitor's education and future career after retiring from active competitive skiing. The competitor has no claim to these funds which shall be dispensed only according to the judgement of his National Ski Association.

205.8 Gambling on Competitions

Competitors, trainers, team officials and technical officials are prohibited from betting on the outcome of competitions in which they are involved. Reference is made to the FIS Betting and other Anti-Corruption Violations Rules July 2013.

206 Advertising and Sponsorship

In the context of this rule advertising is considered as the presentation, of signage or other visibility at the venue informing the public of the name of a product or service to achieve awareness of a company or an organisation and its brand name, activities, products or service. On the other hand Sponsorship provides a company with the opportunity to have a direct association with the competition or series of events.

206.1 Olympic Winter Games and FIS World Championships

All Advertising and Sponsorship rights to the Olympic Winter Games and FIS World Championships belong to the IOC and to the FIS respectively and are subject to separate contractual arrangements.

206.2 FIS Events

For all FIS Events the FIS Advertising Rules define the advertising opportunities in the competition area and are subject to the approval of the FIS Council. For the FIS World Cup Events the FIS Advertising Rules form an integral part of the FIS Organisers Agreement with the National Ski Associations and Organisers.

206.3 Member National Ski Associations

Each FIS affiliated National Ski Association that organises events in its country which are included in the FIS calendars, has the authority as the owner of the event advertising rights to enter into contracts for their sale.

In the case of FIS World Cup competitions these rights shall be defined in the Organiser Agreement upon approval of the FIS Council and considering the National Ski Associations responsibilities.
In cases where a National Ski Association organises events outside its own country these FIS Advertising rules also apply.

206.4 Title and Presenting Sponsorship Rights

In the case of FIS series approved by the FIS Council, FIS markets the rights of the title/presenting sponsor (alternative naming possible) package. For the FIS World Cup series these are marketed to appropriate sponsors that promote the image and values of the discipline concerned. The revenue generated from the sale of the title/presenting sponsor rights is invested by FIS to provide a professional organisation.

206.5 Use of Markings and supports

All Advertising and commercial markings and supports used shall comply with the technical specifications set forth in the applicable FIS Advertising Rules.

206.6 Advertising Packages

Location, number, size and form of the advertising are specified in the FIS Advertising Rules for each discipline. Detailed information including graphical illustrations is laid out in the discipline-specific Marketing Guides which are published on the FIS Website. The Marketing Guides are reviewed and updated as necessary by the Committee for Advertising Matters and approved by the FIS Council prior to their publication.

206.7 Sponsorships by commercial betting companies

206.7.1 FIS will not allocate Title / Presenting Sponsor rights to commercial betting companies.

206.7.2 Sponsorships of events by commercial betting companies is permitted subject to 206.7.3 below.

206.7.3 Advertising of commercial betting companies or other betting activities on or with the athletes (head sponsors, competition suits, starting bibs) is prohibited with the exception of lotteries and companies operating non-sports betting only.

206.8 A National Ski Association or its pool may enter into contracts with a commercial firm or organisation for financial sponsorship and or the supply of goods or equipment if the specific company or organisation is acknowledged as an Official Supplier or Sponsor by the National Ski Association. Advertising using photographs, likeness or names of FIS competitors with any sportsman not eligible according to either the FIS eligibility rules or the eligibility rules of the IOC, is forbidden.
Advertising with or on competitors with tobacco or alcohol products or drugs (narcotics) is forbidden.

206.9 All compensation under such contracts must be made to the National Ski Association or its ski pool which shall receive the compensation subject to the regulations of each National Ski Association. Competitors may not

directly receive any part of such compensation except as stated in art. 205.6. The FIS may at any time call for a copy of the contract.

206.10 Equipment goods supplied to and used by the national team must, with reference to markings and trademarks, conform with the specifications stated in art. 207.

207 Competition Equipment and Commercial Markings

207.1 Competition Equipment at FIS Events

Only the competition equipment, according to the FIS rules on advertising, provided by the National Ski Association, complete with the commercial markings approved by the National Ski Association, may be worn in FIS World Cup and FIS World Ski Championships competitions. Obscene names and/or symbols on clothing and equipment are forbidden.

207.1.1 At FIS World Ski Championships, FIS World Cup and all events on the FIS Calendar, a competitor is not allowed to take equipment (skis/board, poles, ski boots, helmet, glasses) to the official ceremonies involving anthems and/or flag raising. Holding/carrying equipment on the victory podium after conclusion of the whole ceremony (handing over trophies and medals, national anthems) for press photos, pictures, etc. is however permitted.

207.1.2 Winners presentation / Equipment on the podium

At FIS World Ski Championships and all events of the FIS Calendar, a competitor is allowed to take the following equipment on the podium:

- Skis / Snowboards
- Footwear: The athletes may wear their boots on their feet, but are not allowed to wear them anywhere else (such as around their neck). Other shoes cannot be taken on the podium during presentation except if they are worn on the feet.
- Poles: not on/around skis, normally in the other hand
- Goggles: either worn or around the neck
- Helmet: if worn only on the head and not on another piece of equipment, e.g. skis or poles
- Ski straps: maximum of two with name of the producer of skis; eventually one can be used for a wax company
- Nordic Combined and Cross-Country Ski Poles Clips. A clip can be used to hold the two poles together. The clip can be the width of the two poles, though not wider than 4 cm. The length (height) can be 10 cm. The long side of the clip is to be parallel to the poles. The commercial marking of the pole manufacturer can cover the entire surface of the clip.
- All other accessories are prohibited: waist bags with belt, phones on neck-bands, bottles, rucksack/backpack, etc.

207.1.3 An unofficial presentation (flower ceremony) of the winner, and the winners ceremony immediately after the event in the event area with the national anthem even before the protest time has expired, is allowed at the organiser's own risk. Visible wearing of the starting bibs is mandatory.

207.1.4 Visible wearing of the starting bib of the event or other outerwear of the NSA is mandatory in the restricted corridor (including the leader board and TV interview locations).

207.2 Commercial Markings

Specifications about the size, the form and the number of commercial markings on equipment and clothing as well as the by-laws for commercial markings and for advertising are to be reviewed by the Committee for Advertising Matters and approved by the FIS Council each spring for the following competition season and published by the FIS.

207.2.1 The rules governing commercial markings and advertising on equipment and clothing as well as the relevant by-laws published in the Specifications for Competition Equipment/Commercial Markings must be followed.

207.2.2 Any competitor who breaches the advertising rules is subject to sanction, as provided for in art. 223.1.1. An offence for which a sanction may apply and a penalty be imposed is defined as conduct that is in violation or non – observance of competition rules.

207.2.3 If a National Ski Association fails to enforce these rules with on its own competitor(s) or for any reason prefers to refer the case to the FIS, the FIS may take immediate steps to suspend a competitor's licence. The competitor concerned and/or his National Ski Association have the right to make an appeal before a final decision is taken.

207.2.4 If an advertiser uses the name, title or individual picture of a competitor in connection with any advertisement, recommendation or sale of goods without the approval or knowledge of the competitor, the competitor may give a "power of attorney" to his National Ski Association or to the FIS to enable them, if necessary, to take legal action against the company in question. If the competitor concerned fails to do so, the FIS shall judge the situation as if the competitor had given permission to the company.

207.2.5 The FIS Council shall be informed of infractions or breaches of these rules that have taken place with regard to the qualification of competitors, sponsorship and advertising and support for the competitors, and shall review what measures to take to deal with cases.

208 Exploitation of Electronic Media Rights

208.1 General Principles

208.1.1 Olympic Winter Games and FIS World Championships

All Media rights to the Olympic Winter Games and FIS World Championships belong to the IOC and to the FIS respectively, and are subject to separate contractual arrangements.

208.1.2 Rights owned by the member National Ski Associations

Each FIS affiliated National Ski Association that organises events in its country which are included in the annual FIS calendars, has the authority as the owner of the electronic media rights to enter into contracts for the sale of the electronic media rights on those events. In cases where a

National Ski Association organises events outside its own country, these rules also apply, subject to bi-lateral agreement with the National Ski Association of the country where the event takes place.

208.1.3 *Promotion*

Contracts shall be prepared in consultation with the FIS with the intention of giving the widest promotion and exposure to the sports of skiing and snowboarding and considering the best interests of the National Ski Associations.

208.1.4 *Access to events*

For all competitions, admission of personnel and their equipment to the media areas will be limited to those having the necessary accreditation and access passes. Priority access will be given to rights holders and the system of accreditation and access control must avoid possible abuse by non-rights holders.

208.1.5 *Control by the FIS Council*

The FIS Council exercises control over the adherence to the principles of this Rule by National Ski Associations and all organisers. Should a contract or individual clauses thereof, create a major conflict of interest for the FIS, a member National Ski Association or its organiser, then this will be evaluated by the FIS Council. Full information will be provided so that the appropriate solution can be found.

208.2 Definitions

In the context of this rule the following definitions will apply:

"Electronic Media Rights" means the rights for Television, Radio, Internet and Mobile devices.

"Television rights" means the distribution of television images, both analogue and digital, comprising video and sound, by means of terrestrial transmitters, satellite, cable, fibre or wire for public and private viewing on television screens. Pay-per-view, subscription, interactive TV, video on demand services, IPTV or similar technologies, are also included in this definition.

"Radio rights" means the distribution and reception of radio programmes, both analogue and digital, over the air, by wire or via cable to devices, both fixed and portable.

"Internet" means access to images and sound through interconnected computer networks.

"Mobile and portable devices" means the provision of images and sound through a telephone operator and receivable on mobile telephone or other non fixed devices, such as Personal Digital Assistants.

208.3 Television

208.3.1 *Standard of production and promotion of competitions*

In the agreements concerning production with a TV organisation or agency acting as host broadcaster, the quality of TV transmissions for ski and snowboard events published in the FIS Calendar – especially for FIS

World Cup competitions – must be considered. Of particular importance, while taking into consideration applicable national laws and rules affecting broadcasting, are:

a) Top quality and optimal production of a TV signal (for live or deferred transmission depending on the event) in which sport is the centrepiece;

b) Adequate consideration and appearance of venue advertising and event sponsors;

c) A standard of production in conformity with the FIS TV Production Guidelines and appropriate to current market conditions for the discipline and to the level of the FIS competition series. This means live coverage of the entire event including the winner presentation for live transmission (unless circumstances determine that a live production is not provided). This coverage shall be produced in a neutral way, shall not concentrate on any athlete or nation and shall show all competitors

d) The live international signal of the host broadcaster must include appropriate graphics in English, particularly the official FIS logo, timing and data information and results, and international sound.

e) Where it is appropriate to the individual TV market, there should be live TV transmission in the country where the event takes place and in other countries with a high interest.

208.3.2 *Production and Technical costs*

Except when otherwise agreed between the National Ski Association and the agency/company managing the rights, the cost of producing the television signal for the exploitation of the different rights will be borne by the broadcaster having acquired the rights in the country where the competition takes place or a production company mandated to produce the signal by the company owning the rights. In certain cases, the organiser or the National Ski Association may assume these costs.

For each of the different rights granted under this rule the technical expenses that are to be paid for by those organisations that have acquired the rights and which are seeking to access the television signal (original picture and sound without commentary), have to be agreed between the producing company or the agency/company managing the rights, as applicable. This also applies to any other production costs that may be requested.

208.3.3 *Short extracts*

Short extracts granting news access for non-rights holders are to be provided to television companies according to the following rules. It is noted that in a number of countries national legislation governs the showing of short extracts in news programmes.

These extracts may only be used in regularly scheduled news programmes and cannot be kept for archive purposes

a) In those countries where legislation exists regarding news access to sporting events then this legislation will always hold precedence for reporting on FIS events.

b) In those countries where no legislation exists regarding news access by competing networks and provided that agreements between the company managing the rights and the primary rights holder take precedence then short extracts of a maximum of 90 seconds news access will be granted to competing networks by the agency/company managing the rights for transmission four hours after the rights holding network has shown the competition. The use of this material will cease 48 hours after the end of the competition. If the rights holding network delays its transmissions by more than 72 hours from the end of the competition, then competing networks can show extracts of a maximum of 45 seconds commencing 48 hours after and ending 72 hours after the event itself. Any request to exploit short extracts shall be addressed to the agency/company managing the rights which shall grant to the broadcasters access to the short extracts subject to agreement regarding the technical costs incurred to receive the material.

c) In those countries where no transmission rights have been purchased by a television company, all television organisations will be able to transmit short extracts of 45 seconds as soon as the material is available, subject to agreement with the agency/company managing the rights regarding the technical costs to be incurred to receive the material. Permission for the use of this material will expire after 48 hours.

d) Short extracts will be produced by the host broadcaster or the agency/company managing the rights and distributed by that agency/company, taking into consideration 208.3.2 above.

208.4 Radio

The promotion of FIS events through radio programmes will be encouraged by making available accreditation to the principle radio station(s) in each interested country. Access to the venue will be granted solely to those radio organisations that have obtained the necessary contractual authorisation from the rights holder, and will be only for the production of radio (audio) programmes. If accepted by national practice and the authorisation is granted, these programmes can also be distributed on the internet site of the radio station.

208.5 Internet

Unless the contract for the sale of the Electronic Media Rights on FIS events states otherwise, each television rights holder that also acquires the internet rights, will ensure that video streams from its website other than short extracts are geoblocked against access from outside its own territory. Regularly scheduled news bulletins containing material of FIS events may be streamed on the rights holding broadcaster’s website, provided no changes are made to the bulletin as transmitted in the original programme.

Video and audio material produced in public areas where accreditation, tickets or other permissions are not required to gain access must not contain race footage. It is recognised that new technology provides members of the public with the possibility to produce unauthorised video recordings that may be posted on websites. Appropriate information

advising that the unauthorised production and use of video material is prohibited and that legal proceeding could be taken, will be shown at all entrances and printed on entrance tickets.
All National Ski Associations and the rights holders/agencies will give permission for short extracts to be placed on the FIS website for non-commercial use subject to the following conditions:

a) When short extracts have not been acquired for Internet distribution the maximum duration of the news material from FIS competitions will be 30 seconds per discipline/per session and will be accessible on the FIS website until 48 hours after the end of the competition. The financial conditions relating to the provision of this material will be agreed between the FIS and the rights owner.

b) The material will be provided by the rights owner or host broadcaster as soon as possible, but at the latest six hours after the end of the competition.

208.6 Mobile and portable devices

In the cases where the rights for distribution by mobile and portable devices have been awarded, the rights purchaser/operator will be free to produce from the television signal the content it considers best meets the needs of its customers. Any live streaming of television programmes on a national basis using these devices shall not be altered from that available through other distribution channels.

In countries where no mobile distribution rights have been sold, short extracts or clips of a maximum duration of 20 seconds will be offered to operators when the material has been produced and for a period of 48 hours on the condition that the operators pay all related technical costs to the agency/company managing the rights.

208.7 Future developments

The principles contained in this Rule 208 shall be the basis for the exploitation of Electronic Media Rights to FIS events in the future. The FIS Council, on the recommendation of the National Ski Associations, the relevant commissions and experts, will establish the conditions considered appropriate to each new development.

209 Film Rights

All agreements regarding film productions of FIS competitions will be between the film producer and the National Ski Association or the company managing the related rights. All contractual arrangements regarding the exploitation of other media rights will be respected.

210 Organisation of Competition

211 The Organisation

211.1 The Organiser

211.1.1 The Organiser of a FIS competition is the person or group of persons who make the necessary preparations and directly carry out the running of the competition in the resort.

211.1.2 If the National Ski Association itself is not the competition organiser, it may appoint an affiliated club to be the organiser.

211.1.3 The organiser must ensure that accredited persons accept the regulations regarding the competition rules and Jury decisions, and in World Cup races the organiser is obliged to obtain the signature of all persons who do not have a valid FIS season accreditation to this effect.

211.2 The Organising Committee

The Organising Committee consists of those members (physical or legal) who are delegated by the organiser and by the FIS. It carries the rights, duties and obligations of the organiser.

211.3 Organisers which hold competitions involving competitors not qualified under art. 203 - 204 have violated the International Competition Rules and measures are to be taken against them by the FIS Council.

212 Insurance

212.1 The organiser must take out liability insurance for all members of the Organising Committee. The FIS shall provide its employees and appointed officials, who are not members of the Organising Committee (e.g. equipment controller, medical supervisor, etc.), with liability insurance when they are acting on behalf of the FIS.

212.2 Before the first training day or competition, the organiser must be in possession of a binder or cover notes issued by a recognised insurance company and present it to the Technical Delegate. The Organising Committee requires liability insurance with coverage of at least CHF 1 million; whereby it is recommended that this sum is at least CHF 3 million; this sum can be increased according to decisions of the FIS Council (World Cup etc.).
Additionally, the policy must explicitly include liability insurance claims by any accredited participant, including competitors, against any other participant including but not limited to officials, course workers, coaches, etc.

212.3 The Organiser respectively its' National Ski Association may request the FIS insurance broker to arrange cover for the competition (at the cost of the Organiser) if the organiser does not have the necessary insurance cover in place.

212.4 All competitors participating in FIS events must carry accident insurance, in sufficient amounts to cover accident, transport and rescue costs

including race risks as well as an appropriate third party liability insurance. The National Associations are responsible for adequate insurance coverage of all their competitors sent and inscribed by them.
The National Ski Association or their competitors must be able to show proof of the respective insurance coverage at any time on request of the FIS, one of its representatives or the organising committee.

212.5 All trainers and officials inscribed and sent to FIS events by a National Association must carry accident and third party liability insurance, in sufficient amounts to cover accident, transport and rescue costs from damages caused. The National Ski Association or their trainers and officials must be able to show proof of the respective insurance coverage at any time on request of the FIS, one of its representatives or the organising committee.

213 Programme

A programme must be published by the organisers for each competition listed in the FIS Calendar which must contain the following:

213.1 name, date and place of the competitions, together with information on the competition sites and the best ways of reaching them,

213.2 technical data on the individual competitions and conditions for participation,

213.3 names of principal officials,

213.4 time and place for the first team captains' meeting and the draw,

213.5 timetable for the beginning of the official training and the start times,

213.6 location of the official notice board,

213.7 time and place for the prize-giving,

213.8 final date of entry and address for entries, including telephone, telefax and e-mail address.

214 Announcements

214.1 The Organising Committee must publish an announcement for the event. It must contain the information required by art. 213.

214.2 Organisers are bound by the rules and decisions of the FIS in limiting the number of entries. A further reduction in entries is possible under art. 201.1 provided it is made clear in the announcement.

214.3 Postponements or cancellations of competitions and programme alterations must be communicated immediately by telephone, e-mail or telefax to the FIS, all invited or entered National Ski Associations and the appointed TD. Competitions moved to an earlier date must be approved by the FIS.

215 Entries

215.1 All entries must be sent so that the Organising Committee receives them before the final date of entry. The organisers must have a final and complete list not later than 24 hours before the first draw.

215.2 National Ski Associations are not permitted to enter and draw the same competitors in more than one competition on the same date.

215.3 Only National Ski Associations are entitled to make entries for international competitions. Every entry should include:

215.3.1 code number, name, first name, year of birth, National Ski Association;

215.3.2 an exact definition of the event for which the entry is made.

215.4 Entries for FIS World Championships (see Rules for the Organisation of FIS World Championships).

215.5 The entry of a competitor by the National Ski Association for a race shall constitute a contract solely between the competitor and the organiser and shall be governed by the Athletes Declaration.

216 Team Captains' Meetings

216.1 The time and location of the first team captains' meeting and of the draw must be shown in the programme. The invitations for all other meetings have to be announced to the team captains at their first meeting. Emergency meetings must be announced in good time.

216.2 Representation by a substitute from another nation during discussions at team captains' meetings is not allowed.

216.3 The team captains and trainers must be accredited by the organisers according to quota.

216.4 Team captains and trainers must obey the ICR and the decisions of the Jury and must behave in a proper and sportsmanlike manner.

217 Draw

217.1 Competitors' starting order for each event and each discipline is decided according to a specific formula by draw and/or point order.

217.2 The competitors entered by a National Ski Association will only be drawn if provided written entries have been received by the organiser before the closing date.

217.3 If a competitor is not represented at the draw by a team captain or trainer, he will only be drawn if it is confirmed by telephone, telegram, e-mail or telefax by the beginning of the meeting that the competitors who are entered will participate.

217.4 Competitors who have been drawn and are not present during the competition must be named by the TD in his report, indicating if possible the reasons for absence.

217.5 Representatives of all the nations taking part must be invited to the draw.

217.6 If a competition has to be postponed by at least one day, the draw must be done again.

218 Publication of Results

218.1 The unofficial and official results will be published in accordance with the rules for the specific event.

218.1.1 *Transmission of Results*

For all international competitions, there must be direct communication between the Start and the Finish. In Olympic Winter Games the communications must be assured by fixed wiring.

In the data service area, access to the internet (at least ADSL speed) is required for World Cup, World Championships and Olympic Winter Games competitions.

218.2 The data and timing generated from all FIS competitions is at the disposal of FIS, the organiser, the National Ski Association and participants for use in their own publications, including websites. Use of data and timing on websites is subject to the conditions laid down in the FIS Internet Policies.

218.3 FIS Internet Policies and Exchange of Data relating to the FIS Competitions

218.3.1 *General*

As part of the ongoing promotion of skiing and snowboard, the International Ski Federation encourages and appreciates the efforts made by the National Ski Associations to provide messages and information to their members and fans. An increasingly important medium for this provision of information is through the Internet.

The following policy has been established in order to assist National Ski Associations through the provision of data from FIS competitions, and to clarify certain conditions that relate to the use and presentation of the data from FIS competitions.

218.3.2 *FIS Calendar data*

The online FIS Calendar program has been developed for the free use of National Ski Associations and is available in the members section of the FIS website.

218.3.3 *Results and Standings*

National Ski Associations can obtain official results, after they have been approved by the FIS Points verification procedure at the FIS Office. This data will be available on request to the FIS IT Manager who will provide the necessary instructions and/or routines on a case-by-case basis. The FIS World Cup results will include a credit to the results service providers.

Standings from the various Cup series will also be available after receipt from the results service providers in the case of the FIS World Cup, or they have been input manually for other Cup series.

1. The results and data from FIS competitions may only be used on the National Ski Associations', Organisers' and participants' websites and may not be passed on for commercial use to third parties or organisations.
   The National Ski Association may download the data into its' own software for evaluating performances, etc.

2. National Ski Associations who wish to display results on their website, but do not have a database structure to upload the raw data can create a link to the relevant page of the FIS website. The exact addresses can be obtained from the FIS IT Manager.

3. A link will be established from the FIS Website to all National Ski Associations with their own website, as well as the ski industry and relevant media websites on requests. A reciprocal link to the FIS website should also be created.

218.3.4 *Organisers access to results*

Organisers of FIS World Cup races can obtain official results from their races after they have been approved by the FIS Points verification procedure in the results database. The upload is a computer-automated procedure for World Cup races and takes place immediately after the end of the race.

The pdf file containing the results and standings can be downloaded from www.fis-ski.com followed by the discipline code and the name of the site: AL (Alpine), CC (Cross-Country), JP (Ski Jumping), NK (Nordic Combined); SB (Snowboarding), FS (Freestyle Skiing) etc. The individual competition can be identified by the competition codex as published on the detailed page of the calendar on www.fis-ski.com.

219 Prizes

219.1 The detailed rules concerning the awarding of prizes will be published by the FIS. Prizes shall consist of mementos, diplomas, cheques or cash. Prizes for records are forbidden. The FIS Council decides in the autumn on the minimum respectively maximum values of the prize money approximately one and a half years before the competition season. The organisers have to inform the FIS by October 15th of the amount.

219.2 If two or more competitors finish with the same time or receive the same points, they shall be given the same placing. They will be awarded the same prizes, titles or diplomas. The allocation of titles or prizes by drawing lots or by another competition is not allowed.

219.3 All prizes are to be awarded no later than the final day of a competition or event series.

220 Team Officials, Coaches, Service Personnel, Suppliers and Firms' Representatives

In principle these regulations apply to all disciplines, taking into consideration the special rules.

220.1 The Organising Committee of an event must provide the Technical Delegate with a list of persons accredited to the competition.

220.2 It is forbidden for suppliers and for persons in their service to advertise inside the restricted area or to wear clearly visible commercial markings on their clothing or equipment which do not conform with art. 207.

220.3 Team officials accredited service personnel and suppliers receive from the FIS an official FIS accreditation in the Event concerned and must perform their specified function. The individual organisers are free to accredit additional company representatives or other important persons.

220.4 Only persons who have the official FIS accreditation or a special accreditation from the organiser for course or jumping-hill have access to the courses and jumping-hills (according to special rules of the discipline).

220.5 The Different Types of Accreditation

220.5.1 Technical Delegates, the Jury, and the persons mentioned in art. 220 with clearly visible accreditation have access to the courses and jumping-hills.

220.5.2 Servicemen attached to teams are permitted entry to start area and service area at the finish. They are not allowed entry to the courses or jumping-hills.

220.5.3 Company representatives accredited at the discretion of the organisers who do not have FIS accreditation are not permitted entry to the courses and restricted service areas.

221 Medical Services, Examinations and Doping

221.1 National Ski Associations are responsible for the fitness of their competitors to race. All competitors, male and female are required to undergo a thorough evaluation of their medical health. This evaluation is to be conducted within the competitor's own nation.

221.2 If requested by the FIS Medical Committee or its representative, competitors must undergo a medical examination before or after the competition.

221.3 Doping is forbidden. Any offence under these FIS Anti-Doping Rules will be punished under the provisions of the FIS Anti-Doping Rules.

221.4 Doping controls may be carried out at any FIS competition (as well as out-of competition). Rules and procedures are published in the FIS Anti-Doping Rules and FIS Procedural Guidelines.

221.5 Gender of the Competitor

If any question or protest arises as to the gender of the competitor, FIS shall assume responsibility for taking the necessary steps to determine the gender of the competitor.

221.6 Medical Services Required from Event Organisers

The health and safety of all those involved in a FIS competition is a primary concern of all event Organisers. This includes the competitors as well as volunteers, course workers and spectators.

The specific composition of the medical support system is dependent on several variables:

- The size, level, type of the event being held (World Championships, World Cup, Continental Cup, FIS-level, etc.) together with the local medical standards of care and geographic locations and circumstances.
- The estimated number of competitors, support staff and spectators
- The scope of responsibility for the Event Medical Organisation (competitors, support staff, spectators) should also be determined.

The Organiser / The Chief of Medical and Rescue Services must confirm with the race director or technical delegate that the required rescue facilities are in place before starting the official training or competition. In the event of an incident, or issue that prevents the primary medical plan from being utilized, the back up plan must be in place before recommencing the official training or competition.
The specific requirements concerning facilities, resources, personnel and team physicians are contained in the respective discipline rules and the FIS Medical Guide.

222 Competition Equipment

222.1 A competitor may only take part in a FIS competition with equipment which conforms to the FIS Regulations. A competitor is responsible for the equipment that he uses (skis, snowboard, bindings, ski boots, suit, etc). It is his duty to check that the equipment he uses conforms to the FIS specifications and general safety requirements and is in working order.

222.2 The term competition equipment encompasses all items of equipment which the competitor uses in competitions. This includes clothing as well as apparatus with technical functions. The entire competition equipment forms a functional unit.

222.3 All new developments in the field of competition equipment must be approved in principle by the FIS.
The FIS does not take any responsibility for the approval of new technical developments, which at the time of introduction may contain unknown risk to the health or cause an increase in the risk of accidents.

222.4 New developments must be submitted by May 1st, at the latest, for the following season. The first year new developments can only be approved provisionally for the following season and must be finally confirmed prior to the subsequent competition season.

222.5 The Committee for Competition Equipment publishes equipment by-laws after approval by the FIS Council (definitions or descriptions of the equipment items which are allowed).
In principle unnatural or artificial aids which modify the performance of the competitors and/or constitute a technical correction of the individual's physical predisposition to a defective performance, as well as competition equipment which impact the health of the competitors or increase the risk of accidents are to be excluded.

222.6 Controls

Before and during the competition season or on submission of protests to the Technical Delegate at the competition concerned, various controls can be carried out by members of the Committee for Competition Equipment or official FIS Equipment Controllers. Should there be a well-founded suspicion that regulations were violated, the equipment items must be confiscated immediately by the controllers or Technical Delegates in the presence of witnesses and be forwarded sealed to the FIS, which will submit the items to a final control by an officially recognised institution. In cases of protest against items of the competition equipment, the losing party will bear the investigation costs.
No testing of equipment or material in independent laboratories may be requested at races where a FIS Technical Expert has performed the controls, unless it can be demonstrated that the controls have not been carried out according to the rules.

222.6.1 At all FIS events where official FIS measurement experts using the official FIS measurement tools are appointed, the result of measurements carried out at the time are valid and final, irrespective of previous measurements.

223 Sanctions

223.1 General Conditions

223.1.1 An offence for which a sanction may apply and a penalty be imposed is defined as conduct that:

- is in violation or non-observance of competition rules, or
- constitutes non-compliance with directives of the jury or individual members of the jury in accordance with art. 224.2 or
- constitutes unsportsmanlike behaviour

223.1.2 The following conduct shall also be considered an offence:

- attempting to commit an offence
- causing or facilitating others to commit an offence
- counselling others to commit an offence

223.1.3 In determining whether conduct constitutes an offence consideration should be given to:

- whether the conduct was intentional or unintentional,
- whether the conduct arose from circumstances of an emergency

223.1.4 All FIS affiliated associations, including their members registered for accreditation, shall accept and acknowledge these rules and sanctions

imposed, subject only to the right to appeal pursuant to the FIS Statutes and ICR

223.2 Applicability

223.2.1 *Persons*

These sanctions apply to:

- all persons who are registered with or accredited by the FIS or the organiser of an event published in the FIS calendar (an event) both within and outwith the confines of the competition area and any location connected with the competition, and
- all persons who are not accredited, within the confines of the competition area

223.3 Penalties

223.3.1 *The commission of an offence may subject a person to the following penalties:*

- Reprimand - written or verbal
- Withdrawal of accreditation
- Denial of accreditation
- Monetary fine not more than CHF 100’000.--
- A time penalty

223.3.1.1 FIS-affiliated associations are liable to the FIS for the payment of any fines and incurred administrative expenses imposed on persons whose registration or accreditation they arranged.

223.3.1.2 Persons not subject 223.3.1.1 also are liable to the FIS for fines and incurred administrative expenses. If such persons do not pay these fines, they shall be subject to a withdrawal of any permission to apply for accreditation to FIS events for a period of one year.

223.3.1.3 Payment of fines is due within 8 (eight) days following their imposition.

223.3.2 *All competing competitors may be subject to the following additional penalties:*

- Disqualification
- Impairment of their starting position
- Forfeiture of prizes and benefits in favour of the organiser
- Suspension from FIS events

223.3.3 A competitor shall only be disqualified if his mistake would result in an advantage for him with regard to the end result, unless the Rules state otherwise in an individual case.

223.4 A jury may impose the penalties provided in art. 223.3.1 and 223.3.2, however they may not impose a monetary fine of more than CHF 5'000.-- or suspend a competitor beyond the FIS event at which the offence occurred.

223.5 The following Penalty decisions may be given verbally:

- reprimands

- the withdrawal of accreditation for the current event from persons who had not been registered with the organiser through their National Associations
- the withdrawal of the accreditation for the current event from FIS-accredited persons
- the denial of accreditation to the current event from persons who are within the confines of the competition area or any other location connected with the competition.

223.6 **The following Penalty decisions shall be in writing:**

- monetary fines
- disqualification
- impaired starting position
- competition suspensions
- withdrawal of accreditation from persons who had been registered through their National Association
- withdrawal of accreditation of FIS accredited persons

223.7 Written Penalty decisions must be sent to the offender (if it is not a competitor), the offender's National Association and the Secretary General of FIS.

223.8 Any disqualification shall be recorded in the Referee's and/or the TD`s Report.

223.9 All penalties shall be recorded in the TD's Report.

224 Procedural Guidelines

224.1 **Competence of Jury**

The Jury at the event has the right to impose sanctions according to the above rules by majority vote. In the case of a tie, the chairman of the Jury has the deciding vote.

224.2 Within the location, especially during the training and the competition period, each voting Jury member is authorised to issue oral reprimands and withdraw the accreditation which is issued for the current event.

224.3 **Collective Offences**

If several persons commit the same offence at the same time and under the same circumstances, the Jury's decision as to one offender may be considered binding upon all offenders. The written decision shall include the names of all offenders concerned, and the scope of the penalty to be assessed upon each of them. The decision will be delivered to each offender.

224.4 **Limitation**

A person shall not be sanctioned if proceedings to invoke such sanction have not been commenced against that person within 72 hours following the offence.

224.5 Each person who is a witness to an alleged offence is required to testify at any hearing called by the Jury, and the Jury is required to consider all relevant evidence.

224.6 The Jury may confiscate objects that are suspected of being used in violation of equipment guidelines.

224.7 Prior to the imposition of a penalty (except in cases of reprimands and withdrawal of accreditation according to art. 223.5 and 224.2), the person accused of an offence shall be given the opportunity to present a defence at a hearing, orally or in writing.

224.8 All Jury decisions shall be recorded in writing and shall include:

224.8.1 The offence alleged to have been committed

224.8.2 The evidence of the offence

224.8.3 The rule (s) or Jury directives that have been violated

224.8.4 The penalty imposed.

224.9 The penalty shall be appropriate to the offence. The scope of any penalty imposed by the Jury must consider any mitigating and aggravating circumstances.

224.10 Remedies

224.10.1 Except as provided for in art. 224.11, a penalty decision of the Jury may be appealed in accordance with the provisions in the ICR.

224.10.2 If an appeal is not filed within the deadline established in the ICR, the penalty decision of the Jury becomes final.

224.11 The following decisions of the Jury are not subject to appeal:

224.11.1 Oral penalties imposed under art. 223.5 and 224.2

224.11.2 Monetary fines less than CHF 1'000.-- (One Thousand Swiss Francs) for single offence and a further CHF 2'500.-- for repeated offences by the same person.

224.12 In all remaining cases, appeals are to be directed to the Appeals Commission, as per the ICR.

224.13 The Jury shall have the right to submit to the Appeals Commission recommendations for penalties in excess of monetary fines of CHF 5'000.- and suspensions beyond the event in which the offence occurred (art. 223.4).

224.14 FIS Council shall have the right to submit to the Appeals Commission comments with respect to any written penalty decisions by the Jury.

224.15 Costs of Proceedings

Fees and cash expenses, including travel expenses (costs of the proceedings) are to be calculated comparable to costs paid to TD's and

are to be paid by the offender. In the case of a reversal of Jury decisions, in whole or in part, the FIS covers all costs.

224.16 Enforcement of Monetary Fines

224.16.1 The FIS oversees the enforcement of monetary fines and the costs of proceedings. Enforcement costs are considered costs of the proceedings.

224.16.2 Any outstanding monetary fines imposed on an offender is considered a debt of the National Association to which the offender is a member.

224.17 Benefit Fund

All monetary fines are paid into the FIS Youth Promotion Fund.

224.18 These rules are not applicable to any violation of FIS Doping rules.

225 Appeals Commission

225.1 Appointments

225.1.1 The FIS Council shall appoint from the Discipline Sub-committee for Rules (or Discipline Committee if there is no Rules Sub-Committee) a Chairman and a Vice Chairman of the Appeals Commission. The Vice Chairman shall preside when the Chairman is either unavailable or is disqualified for bias and prejudice.

225.1.2 The Chairman shall appoint 3 members, which may include himself, to the Appeals Commission from the Discipline Rules Sub-Committee or Discipline Committee for each case appealed or submitted to be heard, whose decisions shall be by majority vote.

225.1.3 To avoid either actual bias and prejudice or the appearance of bias and prejudice, members appointed to an Appeals Commission shall not be members of the same National Association as the offender whose case is under appeal. In addition, members appointed to an Appeals Commission must report voluntarily to the Chairman any bias and prejudice they may hold for or against the offender. Persons who are biased and prejudiced shall be disqualified from serving on the Appeals Commission by the Chairman or, in the event the Chairman is disqualified, by the Vice Chairman.

225.2 Responsibility

225.2.1 The Appeals Commission shall only hold hearings with respect to appeals by offenders or by the FIS Council from decisions of competition juries, or matters referred to it by competition juries recommending penalties in excess of those provided for in the Sanction rules.

225.3 Procedures

225.3.1 The Appeal must be decided within 72 hours of receipt of the Appeal by the Chairman, unless all parties involved in the Appeal agree in writing to an extension of time for the hearing.

225.3.2 All appeals and responses must be submitted in writing, including any evidence the parties intend to offer in support of or in response to the Appeal.

225.3.3 The Appeals Commission shall decide on the location and format for the Appeal (phone conference, in person, e-mail exchanges).
The Appeals Commission members are required to respect the confidentiality of the appeal until the decision is made public and to consult only with the other members of the panel during the deliberations.
The Chairman of the Appeals Commission may request additional evidence from any of the parties involved, providing this does not require disproportionate means.

225.3.4 The Appeals Commission shall allocate costs of the appeal pursuant to art. 224.15.

225.3.5 Decisions of the Appeals Commission may be announced orally at the conclusion of the deliberations or hearing should one take place. The decision, together with its reasoning, shall be submitted in writing to the FIS, which shall deliver them to the parties involved, their National Associations and all members of the Jury whose decision was appealed. In addition, the written decision shall be available at the FIS Office.

225.4 Further Appeals

225.4.1 Decisions of the Appeals Commission may be appealed to the FIS Court in accordance with Article 52; 52.1 and 52.2 of the Statutes.

225.4.2 Appeals to the FIS Court shall be in writing and submitted to the FIS Secretary-General in accordance with the time limits prescribed in Article 52; 52.1 and 52.2 of the Statutes from the date of the publication of the Appeals Commission decision.

225.4.3 An Appeal to the Appeals Commission or to the FIS Court will not delay the implementation of any penalty decision of the Competition Jury, Appeals Commission or Council.

226 Violation of Sanctions

Where there is a violation of a sanction that has been imposed (according to ICR art. 223 or the FIS Anti-Doping Rules, the Council may impose such further and other sanctions that it considers appropriate.
In such cases, some or all of the following sanctions may apply:

226.1 Sanctions against individuals involved:

- a written reprimand;

and/or

- a monetary fine not to exceed the sum of CHF 100'000.--

and/or

- competition suspension at the next level of sanction - for example if a three month suspension for a doping offence was imposed, a violation of the suspension will cause a two year suspension; if a two year suspension for a doping offence was imposed, a violation of the suspension will cause a lifetime suspension;

and/or

- withdrawal of accreditation from individuals involved.

226.2 **Sanctions against a National Ski Association:**

- withdrawal of FIS funding to the National Ski Association;

and/or

- cancellation of future FIS events in the country involved;

and/or

- withdrawal of some or all FIS membership rights, including participation in all FIS calendar competitions, voting rights at the FIS Congress, membership of FIS Committees.

Rules Common to Alpine Events

The rules of the FIS Alpine World Cup apply to the technical organisation of the Olympic Winter Games and FIS World Ski Championships (Alpine Events) unless further specific rules have been detailed in the ICR.

600 Organisation

Reference is made to art. 211.

601 Organising Committee and Jury

601.1 Composition

The Organising Committee consists of those members (physical or legal) who are delegated by the organiser and by the International Ski Federation. It carries the rights, duties and obligations of the organiser.

601.2 Appointments by the International Ski Federation

The International Ski Federation appoints the Technical Delegate for all competitions and:

601.2.1 *In World Cup Races:*

- the Referee (Chief-Race-Director) and the Assistant Referee (Race-Director)

601.2.2 *For the Olympic Winter Games and FIS World Ski Championships*

- all Jury members (see art. 601.4.1)

601.2.3 *In all other races the Technical Delegate appoints:*

- the Referee and
- for Downhill and Super-G the Assistant Referee

601.2.4 By these appointments the above persons become members of the Organising Committee.

601.3 Appointments by the organiser

The Organiser appoints all other members of the Organising Committee (OC). The Chairman or his representative represents the Committee in public, leads the meetings and makes decisions concerning all matters that are not made by other persons or groups. Before, during and after the competition(s) he works closely with the International Ski Federation and its appointed officials. He takes on all other duties that are necessary for carrying out the competition.
The following officials must be appointed:

601.3.1 *The Chief of Race*

The Chief of Race directs all preparation of the competition and supervises the activities in the technical area. He summons meetings for consideration of technical questions and leads the team captains' meetings after consultation with the Technical Delegate.

601.3.2 *The Chief of Course*

The Chief of Course is responsible for the preparation of the courses in accordance with the directives and decisions of the Jury. He must be familiar with local snow conditions on the terrain concerned.

601.3.3 *The Start Referee*

The Start Referee must remain at the start from the beginning of the official inspection time and until the end of a training/event.

- He makes sure that the regulations for the start and the start organisation are properly observed.
- He determines late and false starts.
- He must be able to communicate immediately with the Jury at all times (see art. 705.5).
- He reports the names of the competitors who did not start to the Referee, and informs the Jury of all infringements against the rules, such as false or delayed starts or violations against the rules for equipment.
- He must ensure that reserve bibs are available at the start.

601.3.4 *The Finish Referee*

The Finish Referee must remain at the finish from the beginning of the official inspection time until the end of a training/event throughout the training and the race.

- He makes sure that all the regulations for the organisation of the finish and the finish in-run and out-run are properly observed.
- He supervises the finish controller, the timing and the crowd control in the finish area.
- He must be able to communicate immediately with the Jury at all times.
- He reports the names of the competitors who did not finish to the Referee and informs the Jury of all infringements against the rules.

601.3.5 *The Chief Gate Judge*

The Chief Gate Judge organises and supervises the work of the gate judges. He designates the gates each will supervise and places them in position. At the end of the first run and the end of the race he collects the gate judges' control cards and delivers them to the Referee.

He distributes, in good time, the material that is needed (control card, pencil, start list, etc.) to each gate judge and is prepared to offer assistance either to help keep the spectators off the course or to help maintain the course, etc. He makes sure that the numbering and the marking of the gates is completed within the required time.

601.3.6 *The Chief of Timing and Calculations*

The Chief of Timing and Calculations is responsible for the coordination of officials at the start and finish, including timing and calculations. In Slalom, he or a special assistant will decide the interval between starts. The following officials are under his direction:

- starter
- assistant starter
- start recorder
- chief timekeeper
- assistant timekeepers

- finish controller
- chief of calculations and his assistants

He oversees the preparation of the Timing and Data Technical Report (TDTR) and xml file for the electronic transmittal to FIS following the competition. A copy of the report may also be printed (only if the TD has no access to his report) for review prior to the transmission of the xml file. The TDTR Software can be found on the FIS website.

601.3.7 *The Race Secretary*

The Race Secretary is responsible for all secretarial work for the technical aspects of the competition and amongst others for the preparation of the draw. He ensures that the official results contain the information required by art. 617.3.4. He is responsible for the minutes of the technical officials, the Jury and team captains' meetings.

He ensures that all forms for start, finish, timing, calculations, and gate-judging are well prepared, and handed over to the officials concerned in good order at the proper time.

He facilitates the calculation of results by appropriate preparation and ensures that the result xml file is available for transmission to FIS. He also ensures the duplication and publication of the official results after the Results are considered “Valid for FIS points”. In the case that the transmission of the electronic xml result file is delayed, results may be duplicated and published with the permission of the TD.

601.3.8 *The Chief of Medical and Rescue Services*

The Chief of Medical and Rescue Services is responsible for organising adequate first aid and medical coverage during the official training periods and the actual competition.

He must arrange an appropriate facility to which injured competitors should be taken and treated.

He coordinates plans with the team doctors before the start of the official training or the start of any competition.

During training and the races he must be in telephone or radio communication with his assistants. He must co-ordinate plans with the Chief of Race before the start of the official training, or start of any competition.

A doctor, who should be a good skier, should be ready at the start to deal with any eventuality and must stay in contact with the Jury and the members of the rescue service. This task can be delegated to a team doctor. Details of the Medical Support Requirements are given in chapter 1 of the FIS Medical Guide.

601.3.9 *Other officials within the Organising Committee (OC)*

The following officials may also be appointed:

601.3.9.1 *The Chief Steward*

The Chief Steward takes all measures to ensure that spectators are kept off the course. To this end sufficient personnel must be used. Attention should be paid to ensure sufficient space behind the barriers to permit circulation of spectators.

601.3.9.2 *The Chief of Course Equipment and Technical Equipment*

The Chief of Course Equipment is responsible for the provision of equipment and tools needed for the preparation and maintenance of the courses and the conduct of the race, where these duties have not been assigned to another official.

601.3.9.3 *The Chief of Press*

The Chief of Press is responsible for all briefing and information provided to journalists, photographers, television and radio reporters, in accordance with the instructions of the Organising Committee.

601.3.9.4 *The following additional officials are recommended:*

- chief of finance (treasurer)
- chief of accommodation and meals
- chief of protocol

The Organiser is authorised to include other officials within the Organising Committee.

601.4 The Jury

The following members of the Jury, who are members of the Organising Committee are responsible for technical matters within the closed competition areas (see job description World Cup Rules of the Race Directors and TD's for Olympic Winter Games, FIS World Ski Championships and World Cup):

- the Technical Delegate
- the Referee
- the Chief of Race
- the Assistant Referee for Downhill and Super-G (and also for Slalom and Giant Slalom for Olympic Winter Games, FIS World Ski Championships and World Cup)
- the Start Referee (Olympic Winter Games and FIS World Ski Championships)
- the Finish Referee (Olympic Winter Games and FIS World Ski Championships)

601.4.1 *Appointment of the Jury for Olympic Winter Games and FIS World Ski Championships*

601.4.1.1 *The FIS Council appoints:*

- the Technical Delegate
- the Referee
- the Assistant Referee
- the Start Referee
- the Finish Referee

601.4.1.2 The Sub-Committee for Alpine Technical Delegates proposes qualified TD's as Jury members to the Alpine Committee, who in turn submit the names to the FIS Council for approval.

In order to qualify, a proposed member must hold a valid licence as a Technical Delegate of the FIS.

601.4.1.3 The organising National Ski Association submits its proposals for the Chief of Race in the Organising Committee to the FIS Council for approval.

601.4.1.4 The Jury of a ladies' race must include at least one lady.

601.4.1.5 All members of the Jury must be able to understand each other in one and the same FIS language.

601.4.1.6 Persons who work for a National Ski Association with responsibility for a ski team must not be members of the Jury.

601.4.1.7 For Olympic Winter Games and FIS World Ski Championships a visiting nation can be represented on the Jury by only one FIS Council appointed member (not including the TD).

601.4.2 Appointment of the Jury for International Races (World Cup: see World Cup Rules)

601.4.2.1 The Sub-Committee for Alpine Technical Delegates appoints the Technical Delegate.

601.4.2.2 The TD appoints

- the Referee, and for Downhill and Super-G, the Assistant Referee.

He substitutes Jury members in case of force majeure

601.4.2.3 For international races for ladies´ the Jury should where possible include a lady.

601.4.2.4 The Chief of Race must belong to the organising National Ski Association.

601.4.3 Exclusions

601.4.3.1 A competitor cannot be a member of the Jury.

601.4.4 Tenure of the Jury

601.4.4.1 The appointed Jury members gather for their first meeting prior to the first Team Captain's meeting.

601.4.4.2 The active duty of the Jury begins with its first meeting and ends, if no protest is submitted, at the expiration of the protest deadline, otherwise after settlement of all submitted protests.

601.4.5 Franchise and Voting (World Cup: See also FIS World Cup Rules)

The TD is chairman of the Jury. He conducts the meetings. Each of the following has one vote in the Jury:

601.4.5.1 For Olympic Winter Games and FIS World Ski Championships, all Jury members.

601.4.5.2 For International races

The TD, Chief of Race, Referee and in the case of Downhill and Super-G, the Assistant Referee.

601.4.5.3 Decisions are made by simple majority vote of members present and voting (exception art. 646.3).

601.4.5.4 In the case of a tie, the TD has the casting vote (also see FIS World Cup Rules).

601.4.5.5 Minutes must be kept of all meetings and decisions of the Jury and signed by each individual member of the Jury, with each individual vote on decisions recorded, as per art. 601.3.7.

601.4.5.6 The Minutes must be written in at least one of the FIS languages (English, French or German).

601.4.5.7 In cases where an immediate decision must be made and it is not possible to convene the entire Jury, each member of the Jury has the right, prior to or during the race, to make decisions which according to the rules are reserved to the Jury as a whole; but only provisionally with the obligation to have the decision confirmed by the Jury as soon as possible.

601.4.6 *Duties of the Jury*

The Jury monitors the adherence to the rules throughout the entire race, including the official training.

601.4.6.1 *From a technical standpoint particularly by:*

- Checking the race-course and the set courses
- Checking the snow conditions
- Checking the preparation of the course
- Approving the use of snow compactors and other chemicals
- Checking the crowd control systems
- Checking the start, the finish and the run-out from the finish
- Checking the first aid service
- Appointing the course setters
- Fixing the time of course setting
- Overseeing the work of the course setters
- Spot-checking of the gate panels
- Opening or closing race courses for training after consideration of the technical preparations and the prevailing weather conditions
- Determining the method of the competitor's course inspection
- Inspection of the course before the race
- Determining the number of forerunners for each run and setting the start order of the forerunners
- Debriefing the forerunners as necessary
- Changing the start order after consideration of course conditions and in extraordinary conditions
- Changing the start intervals
- Giving instructions to and obtaining information from the gate judges

For Downhill:

- Arrangement of an additional competitor's inspection in unusual weather conditions
- Shortening the official training
- Positioning of yellow flag
- Checking on the setting of gates

- Changing the position and distance of the gates or adding extra gates as indicated by the experience gained in the training runs. Following significant changes, the competitors must be allowed at least one more training run on the course.

601.4.6.2 *From an organisational viewpoint particularly by:*

- Ranking of the competitors for the draw
- Division of the competitors without points into groups according to some determined basis
- Granting of re-runs
- Cancellation of the race (beforehand),
  - if snow conditions are unsuitable
  - the recommendations of the Technical Advisor's report have not been carried out
  - the first aid and medical service are inadequate or missing
  - the crowd control is insufficient
- Shortening the course, if snow or weather conditions make this appear necessary
- Interruption of the race if the prerequisites of art. 624 are present
- Termination of the race if the prerequisites of art. 625 are present

601.4.6.3 *From a disciplinary viewpoint particularly by:*

- Decision on a proposal of the Technical Delegate or a Jury member to exclude a competitor for lack of physical and technical ability
- Enforcement of the checks on regulations concerning advertising on equipment and clothing in the competition area
- Decisions on limitation of quotas for officials, technicians and medical personnel for admission to the race-course
- Imposition of sanctions
- Decisions on protests
- Issue of particular directives throughout the entire event

601.4.7 *Questions not Covered by Rules*

In general, the Jury makes decisions on all questions not clarified by the Rules.

601.4.8 *Radios*

At all competitions published in the FIS Calendar, the Jury members plus Start and Finish Referee must be equipped with radios. These must function on a single reserved frequency and be free of interference.

601.4.9 *Duties of the TD for all Events*

For FIS World Cup, FIS World Ski Championships and Olympic Winter Games the duties of the TDs are defined in the World Cup rules.

601.4.9.1 *Before the race*

The TD

- Reviews the homologation file and consults the organiser regarding the existence of a special authorisation.
- If he establishes that no homologation exists, the Jury must cancel the race (see art. 650).

- He reads the TD reports concerning previous events at the site and checks whether any improvements proposed in these reports have been carried out.
- Inspects the liability insurance certificate as required by art. 212.2 and reports where necessary to the FIS.
- Inspects the competition courses.
- Supervises the compliance with art. 704 concerning the official training.
- Spot checks the gate panels.
- Collaborates in the administrative and technical preparations.
- Checks the official entry lists, including FIS points.
- Checks on the presence of sufficient radios for all members of the Jury (with separate frequencies).
- Takes note of the accreditation and the authorisation for entry to the competition course.
- Checks over the race courses with regard to preparation, marking, crowd control, as well as the layout of start and finish areas.
- Supervises the course setting together with the Jury.
- Checks on the location of the television towers and sees that they are adequately protected if necessary.
- Checks the locations of the first aid service along the course as well as the organisation of the medical care.
- Checks on all technical installations such as timekeeping, hand timing, communications, transport of people, etc.
- Is present in the race area during all official training.
- Takes part in all meetings of the Jury and of the team captains.
- Works closely together with the officials of the Organising Committee and the FIS technical advisor.
- Is Chairman of the Jury with a casting vote in case of a tie.
- If necessary, appoints members to the Jury.
- Has the right, if a Slalom or Giant Slalom cannot be carried out on the homologated course owing "force majeure", to move the race to a "substitute course" proposed by the organiser. This is on the explicit condition that the necessary homologation measures can be fulfilled. For Downhill and Super-G there is only the possibility of shortening the run on a homologated course. The minimum prescribed vertical drops must, however, be observed in every case.

601.4.9.2 *During the race*

The TD

- Must be present in the course area.
- Works closely with the Jury, the team captains and the coaches.
- Observes that the valid rules and directives with regard to advertising, on clothing and race equipment are obeyed.
- Supervises the technical and organisational conduct of the event.
- Advises the organisation concerning the observance of the FIS Rules and regulations, and directives of the Jury.

601.4.9.3 *After the race*

The TD

- Helps with the compilation of the Referee's report.
- Calculates the race and penalty points for the individual races. If these points are calculated by computer, it is the TD's duty to re-check the

points and to confirm their accuracy with his personal signature. Above all he checks the correct use of the corresponding F value for each event.
- Presents properly submitted protests to the Jury for decision.
- Signs the official result lists provided by the race secretary and gives the authorisation for the award ceremony.
- Oversees the electronic transmission of the Timing Report (TDTR) xml files and completes his TD Report online immediately after the event. He must also check that the results are correct on the FIS website. For more information see Rules of the FIS Points.
- Presents to the FIS proposals for changes in the competition rules on the basis of practical experience at the event in question.

601.4.9.4 *In general*

The TD
- Decides on questions which are not covered or are insufficiently covered by the FIS Rules, in so far as these have not already been decided by the Jury and do not fall within the scope of other authorities.
- Works very closely with the Referee and Assistant Referee.
- Has the right to propose to the Jury the exclusion of competitors from participating in the race.
- Has the right to obtain support from the Organising Committee and all officials under its jurisdiction in all matters necessary for the fulfilment of his duties.

601.4.9.5 *Olympic Winter Games, FIS World Ski Championships and FIS Junior World Ski Championships*

The TD prepares a detailed final report to be sent to the FIS and the Organising Committee.

601.4.10 *Duties and Rights of the Referee*
- The Referee supervises the draw.
- At the end of the first run, and again at the end of the race, the Referee will receive the Start and Finish Referees' reports, and any other official reports regarding breach of rules and disqualifications.
- Checks, signs and posts the Referee's Report on the official notice board at the end of each run, and at the end of the race, including a list of disqualified competitors, the gate numbers where the faults occurred, the name of the relevant gate judge or judges, and the exact time of the posting.
- Sends a report to the FIS should unusual circumstances arise or in the event of a serious difference of opinion among the Jury members or in the case of severe injury to a competitor.

601.4.10.1 *Collaboration with the TD*

The Referee and the Assistant Referee work very closely with the TD.

601.4.11 *The Technical Adviser*

To support the Jury, the Alpine Committee can appoint technical advisers for all categories of races.

The technical adviser has the right to express his opinion within the Jury - without the right to vote.

601.5 The FIS can impose sanctions against a Jury or individual Jury members.

602 The Technical Delegate (TD)

602.1 Definition

602.1.1 *The primary duties of the TD*

- to make sure that the rules and directions of the FIS are followed
- to see that the event runs smoothly
- to advise the organisers about the scope of their duties
- to be the official representative of the FIS

602.1.2 *Responsibility*

The TD structure comes under the responsibility of the Alpine Committee. The Sub-Committee for Alpine Technical Delegates exercises this authority.

602.1.3 *Prerequisites*

The TD must hold a valid TD licence (exception see art. 602.3).

602.1.4 *Development*

602.1.4.1 *The development of a TD is:*

- Applicant
- Observer at National Level FIS races
- Oral entrance examination
- Written entrance examination
- Candidate
- Practical examination (Downhill Event acting as the Assistant Referee)
- Practical examination (Giant Slalom or Slalom acting as TD)
- TD

The FIS recommends that the National Ski Associations apply a maximum age limit of 40 for applicants and 65 years for TD's (qualifying date: 1st July).

602.1.4.2 Each National Ski Association should nominate capable persons to train as a TD. The Sub-Committee for Alpine Technical Delegates has the final decision as to their acceptance.

602.1.5 *Training*

602.1.5.1 The basic training of the applicant is the responsibility of each National Ski Association.

602.1.5.2 The applicant must be nominated by his respective NSA.

First Year

- The applicant must attend the annual TD update course held be the NSA (June-July Southern Hemisphere, October-November Northern Hemisphere).

- Attend two FIS races held in his country in order to gain experience under the supervision of the TD Commissioner or his appointed representative.
- Complete official reports for these assignments and send them to his TD Commissioner, with copies to the FIS (in an official language).
- At the end of the season the NSA applies to the FIS for official acceptance of the applicant, copy to the TD Commissioner.

Second Year
- The applicant must attend the annual national TD update.
- Must pass the written and oral entrance examination conducted in an official FIS language.

As a Candidate
Is assigned under the supervision of a TD Examiner (from another country) to a:
- Practical examination (Downhill event acting as the Assistant Referee)
- Practical examination (Giant Slalom or Slalom and acting as the TD)
- Complete official reports for these assignments and send them to his TD Commissioner, with copies to the FIS (in an official language)
- The FIS Office will verify all the information from the different reports from the candidate and examiners and provide such details as necessary to the Sub-Committee for TDs.
- The Sub-Committee may decide not to issue a TD licence if the candidate has not completed all requirements or is deemed to be unsuitable. In this event the Sub-Committee may decide as to whether the candidate may continue to train as a FIS TD and which parts of the procedure have to be repeated.
- If the candidate is considered to be suitable he will become an official FIS Alpine Technical Delegate after the next TD update course.

602.1.5.3 At any event only one TD candidate may serve with a TD. Exceptions can be authorised by the FIS.

602.1.5.4 The assignment of the TD candidates is conducted, on proposal of the national responsible officials for TD questions, by the FIS, which also checks the performances of the individual candidates.

602.1.5.5 The TD candidate has no right to reimbursement of costs.

602.1.5.6 The TD is responsible for training the candidate assigned to him.

602.1.6 *Licence*
The licence is a numbered identification document valid for 12 months. It must be renewed each year and is obligatory for every TD.

602.1.7 *Further Training and Expiration of Licence*
Every licensed TD must take part annually in a further training course supervised by FIS. A TD will lose his licence if he misses two consecutive TD updates or misses two years' assignments and can show no good reason for his absence. To regain the licence he must once again undergo the TD Candidate procedures.

602.2 Appointment

602.2.1. For Olympic Winter Games, FIS World Ski Championships and FIS Junior World Ski Championships the appointment is made by the FIS Council on recommendation of the Alpine Committee.

602.2.2 For all other competitions, the appointment is made by the Sub-Committee for Alpine Technical Delegates.

602.2.3 An exception is made for Youth, CIT, Masters, World Cup DAR, DAR, CISM, Customs and UNI races, for which the TD's are proposed by the Sub-Committee in question and confirmed by the Sub-Committee for Alpine Technical Delegates.

602.2.4 A TD cannot be member of the organising association.
In exceptional cases the Committee for Alpine Technical Delegates may appoint a TD from the same country. He must, however, not be a member of the organising club or of the regional association.

602.3 TD Replacement

602.3.1 If the TD for Olympic Winter Games, FIS World Ski Championships or FIS Junior World Ski Championships is unable to serve, the FIS Council as well as the National Ski Association to which the TD belongs must be notified. The FIS Council must appoint another TD immediately.

602.3.2 For all other races the National Ski Association to which the TD belongs is responsible for the immediate appointment of a replacement. The Organising Committee in question and the FIS are to be informed immediately.

602.3.3 If for unforeseen reasons, a TD for the Olympic Winter Games or FIS World Ski Championships does not arrive or arrives too late at a competition and is thereby partly or completely unable to fulfil his function at the competition, a deputy is to be named by the FIS Council from amongst the members of the Jury present at the competition site.

602.3.4 At all other international races, a deputy for the absent TD is to be named on the spot by the Jury. The replacement must likewise meet the requirements of art. 602.1.6.
In an emergency, a TD can also be named who does not meet these requirements, but is competent to ensure the conduct (or continuation) of the race. Stringent criteria must be applied when choosing this person.

602.3.5 The replacement TD has the same rights and duties as the TD originally appointed.

602.4 Organisation of the Assignments

602.4.1 The TD must establish early contact with the Organiser.

602.4.2 Cancellations or postponements of events must be announced to the TD and to the FIS immediately, taking into account any applicable deadlines.

602.4.3 For Downhill and Super-G, the TD must arrive at the competition site at least 48 hours before the draw for the first training. In all other events this must be at least 24 hours before the draw for the event concerned.

602.5 Expense Accounts

The TD[2)] has a right to reimbursement for his travel expenses up to a maximum of CHF 600.--[1)] (highway taxes included), as well as free accommodation and meals during the assignment. This rule also applies to agreed inspections as well as the trip to the competition (train, first class; for longer distances air fare, tourist class; or payment of a per kilometre fee of CHF 0.70 or equivalent).

In addition a fixed daily rate of CHF 100. -- is added for the travel days to and from, as well as each day of the assignment, which includes postage charges for mailing reports, etc. Double charges (e.g. travelling home on the same day as the last race) are not permitted. If overnight accommodation during the journey to and from the assignment is necessary, this must be justified and reimbursed separately.

1) The maximum payment of CHF 600. -- is valid for all races except Olympic Winter Games, World Cup and Continental Cup.

2) This rule applies to all jury members at the Olympic Winter Games and FIS World Championships.

603 Course Setter

603.1 Prerequisites

603.1.1 For Olympic Winter Games, FIS World Ski Championships and World Cup:

- nomination by the National Ski Association team captain to the Coaches Working Group and
- proof of appropriate experience in the setting of courses for World Cup events, Olympic Winter Games or FIS World Ski Championships

603.1.2 For all other competitions entered in the FIS Calendar:

- Continental Cup: Nomination from National Ski Associations to Cup Coordinators or Working Group.
- All other events in the FIS Calendar: Nomination through the Jury or Organising Committee

603.1.3 For Downhill's, the course setter must be acquainted with the particular race course.

603.2 Appointment

603.2.1 For Olympic Winter Games, FIS World Ski Championships and World Cups, the appointment is made after examination by the Chief Race Director.

603.2.2 For European Cup, the EC Coordinator appoints the course setters.

603.2.3 For all other competitions included in the FIS Calendar, the appointment is made by the Jury. For competitions consisting of two runs, each run is to

be set by a different course setter. One of the two course setters may be named by the organiser.

603.3 Supervision of the Course Setters

603.3.1 The work of the course setters is supervised by the Jury.

603.4 Organisation of the Assignment

For Olympic Winter Games, FIS World Ski Championships and World Cup races the course setter assignment is managed by the Chief Race Director. For European Cup races the course setter assignment is managed by the EC Coordinator. For all remaining races the assignment is managed by the Jury.

603.5 Replacement of Course Setters

603.5.1 For Olympic Winter Games and FIS World Ski Championships, the Chief Race Director names a replacement course setter immediately, details of which are published by the FIS Office.

603.5.2 For all other competitions entered in the FIS Calendar, the Jury names a replacement course setter.

603.5.3 The replacement course setter should have the same qualifications as the original course setter.

603.6 Rights of the Course Setter

603.6.1 To recommend the introduction of changes in the competition terrain and in the safety measures.

603.6.2 Availability of a sufficient number of helpers for the setting of the course, so that he can concentrate solely on the course setting.

603.6.3 Provision of all necessary materials by the chief of course equipment.

603.6.4 Immediate completion of the finishing touches to the race course.

603.7 Duties of the Course Setter

603.7.1 In order to set the course appropriately, respecting the terrain, the snow cover and the ability of the participating competitors, the course setter conducts a pre-inspection of the race terrain in the presence of the TD, the Referee, the Chief of Race, and the Chief of Course.

603.7.2 The course setter sets the course respecting the existing safety measures and course preparation. The course setter must take speed control into consideration.

603.7.3 All courses must be set according to the ICR

603.7.4 The courses must be set and ready in time, so that the competitors are not disturbed during course inspection.

603.7.5 The course setters should take care that the difference between the winning times of each run of Slalom and Giant Slalom will not be too great.

603.7.6 The course setting is a task of the course setter alone. He is responsible for adhering to the rules of the ICR and may be advised by members of the Jury, and by the technical advisor in Downhill and Super-G, if present.

603.7.7 The course setters must participate in all team captains' meetings at which a report is to be made about his course.

603.8 Arrival at the Race Site

603.8.1 For Downhill and Super-G races, this should be no later than the morning of the day of the first team captains' meeting, so that if required any additional course preparation or safety measures can be implemented.

603.8.2 For Slalom and Giant Slalom races if possible this should be the day before, but always before the first team captains' meeting.

604 Accreditation / Rights and Duties of Team Officials

604.1 Officials, Medical* and Technical Personnel

Quotas for the right of access to the closed race course:

- up to 3 competitors: 3 trainers 2 doctors* 2 technicians
- 4 or 5 competitors: 4 trainers 2 doctors* 3 technicians
- 6 to 10 competitors: 5 trainers 2 doctors* 4 technicians

As well as representatives of the FIS in an official capacity.

These quotas include the national team officials (team captains, etc.).
These persons must be identified by armband or another clearly visible accreditation. If necessary, the Jury can reduce these quotas, Cup Rules can determine special quotas.
The persons accredited according to art. 220.3 and 220.5, as well as the official technicians and medical personnel must comply with the directions of the officials charged by the organisers with responsibility for overall security (e.g.: stewards, police, etc.).
The instructions given by the Jury to accredited journalists, coaches and team captains have priority in all cases.

*) Medical personnel includes doctors, physiotherapists, first aid people etc.

604.2 Team Captains and Trainers

The team captains and trainers must be accredited by the organisers according to quota. The accreditation gives the following rights and duties:

- to be a member of the Jury;
- to be nominated as a competition official if these have not been appointed by the FIS or if the appointed person is not present;
- to be issued with a lift pass or armband during the training or competition (or reimbursement for costs if a lift pass has not been provided);

- to be issued with a pass or armband stating the function or written “Course”.

604.2.1 Team captains and trainers must obey the ICR and the decisions of the Jury, and must behave in a proper and sportsmanlike manner.

604.2.2 A team captain or trainer must fulfil the duties he has accepted as a member of the Jury, or as a course setter.

604.3 Team Captains Meetings and Draw

In accordance with ICR 213.4 and 216 the time and location of the first team captain’s meeting and of the draw must be shown in the program. An actual meeting, attended in person by team captains, jury, and race officials is an inseparable part of the competition and is important for communication of jury instructions, support of the OC, OC requests and information as well as a critical element for risk management and liability related matters. ICR 216 and 217 apply in all cases.

604.4 Entries and Draw

604.4.1 The Organiser must determine the final date of entry (art. 213.8) between 48 h and 24 h (art. 215.1) before the first Team Captains´ Meeting.

604.4.2 A Team Captain may only make substitutions before the Draw.

604.4.3 The event programme as determined in art. 213 must be published on the FIS website alpine competition calendar.

605 Forerunners

605.1 The organiser is obliged to provide at least three forerunners who have signed the FIS Athletes Declaration. The forerunner is a member of the Organising Committee. In Downhill, the forerunners should participate in all training runs. In extraordinary conditions, the Jury may increase the number of forerunners.
The Jury may designate different forerunners for each run.

605.2 The forerunners must wear forerunner's start numbers (bibs).

605.3 The nominated forerunners should have the skiing ability to ski the course in a racing manner.

605.4 Forerunners are not permitted to start in the competition.

605.5 The Jury determines the forerunners and their start order. After an interruption of the race additional forerunners may be authorised as necessary.

605.6 The times of the forerunners should not be published.

605.7 Upon request the forerunners must report to members of the Jury regarding the snow conditions, the visibility and the race line, as the case requires.

606 Competitors' Equipment (see also Specifications for Competition Equipment)

606.1 Equipment Rules

For more details, see ICR, art. 222 and following and the FIS Specifications for Competition Equipment and Commercial Markings.

606.2 Competition Suits

606.2.1 For Downhill, Giant Slalom and Super-G competitions at the Olympic Winter Games, FIS World Ski Championships, FIS World Cup, FIS Continental Cups and FIS World Junior Ski Championships competition suits must conform to the Specifications for Competition Equipment. (see art. B 5.f)

606.2.2 The competition suit must have a label attesting conformity with FIS specifications for competition suits.
DH/SG/GS:
Fulfillment of requirements is to be attested by a specific standardized conformity label affixed in a non-removable way at the back of the lower left leg above the top of the ski boot cuff area of the competition suit in a location, which is and shall remain visible during competition. The conformity label shall include the following text:
“Conforms to FIS specifications CS 2015”.

Labels affixed by manufacturers shall comply with the specifications set forth in the attachment. The conformity label attests that the manufacturer and NSA are guaranteeing that the surfaces of the competition suit are not plasticised or treated by any chemical means (gaseous, liquid or solid) and that they have a minimum permeability of 30 litres per m2/sec with a measurement tolerance of 3,0 litres per m2/sec.

Both conformity systems, label and plomb systems, will be valid during the transition period until the end of the 2017/18 season.

606.2.3 In this case or when a doubt exists concerning subsequent modification of a racing suit or if there is a protest, the following procedure must be followed:
Following recognition of one of the above circumstances the racing suit is immediately marked. At the end of the race the TD must confiscate this competition suit and send it to the FIS for control.

606.2.4 Officials present at the competition and appointed for suit controls by the Committee for Competition Equipment have the right to make re-examinations on site.

606.3 Ski Brakes

For competitions and official training only skis with ski brakes must be used. Competitors without ski brakes are not allowed to start.

606.4 Helmets

In all events all competitors and forerunners are obliged to wear crash helmets that conform to the Specifications for Competition Equipment.

606.5 **Start Numbers (Bibs)**

All competitors must wear the official start numbers (Bibs) during the race. For the design of bibs and the commercial imprints see specifications in the FIS Advertising Rules. All bibs used during a single competition must have the same shape and size lettering and attachment method must not be altered.

606.6 **Advertising**

Advertising on material and equipment which is worn during races and training must conform to the FIS Specifications for Competition Equipment and Commercial Markings.

607 Age Limits

607.1 The FIS competition year is July 1st - June 30th of the following year.
In order to compete in international competitions (except U16 - U14 competitions) a competitor must be no younger than age group U18.

607.2 International junior competitions are restricted to U18 and U21 age group. (Exception National Junior Championship)

607.3 **Classification at International Competitions**

Admitted years of birth

FIS Competition Year	16/17	17/18
U14	2004 2003	2005 2004
U16	2002 2001	2003 2002
U18	2000 1999	2001 2000
U21	1998 1997 1996	1999 1998 1997
Licensed	2000 and earlier	2001 and earlier
Masters A (Men)	1986 to 1962	1987 to 1963
Masters B (Men)	1961 and earlier	1962 and earlier
Masters C (Ladies)	1986 and earlier	1987 and earlier

608 Youth International Alpine Competitions

608.1 **Approval by the FIS**

International U16 - U14 competitions are to be approved by the FIS and published in the FIS Calendar.

608.2 **TD Assignment**

TD's are proposed by the Youth Sub-Committee and are to be confirmed by the Sub-Committee for Alpine Technical Delegates. (art. 602.2.3)

608.3 Age Limits

International U16 - U14 competitions are restricted to U14 and U16 age group. Each competitor at U16 - U14 events has to prove their year of birth with an official document (Identity card, passport). The year of birth has to be mentioned on the race entry. Admitted years of birth, see art. 607.3

608.4 Limits on Competitions

608.4.1 A U14 competitor may take part in a maximum of two international U16 - U14 alpine competitions outside his own country.

608.4.2 A competitor in the first year of U16 may take part in a maximum three, international U16 - U14 alpine competitions outside his own country.

608.4.3 A competitor in the second year of U16 may participate in a maximum four international U16 - U14 alpine competitions outside his own country.

608.4.4 Athletes from the Southern Hemisphere are granted the following exception: U14 competitors may participate in a maximum of 4 (four) competitions in the Northern Hemisphere and U16 competitors may participate in a maximum of 8 (eight) competitions in the Northern Hemisphere.

608.4. 5 Adherence to these Rules should be monitored by the Youth Sub-Committee.

608.5 Quota regulations for Europe, USA and CAN

608.5.1 The quota per nation is max. 4 (four) U14 and 6 (six) U16 resulting in the total number of max. 10 competing athletes per nation. No more than 4 (four) athletes of the same gender may be registered within each category. The organising nation is entitled to a double quota that is maximum 20 competing athletes. In case of events within multiple races the quota is for the event and not for the race.

608.5.2 Under normal circumstances, the max. number of competing athletes must not exceed 140 per category and gender.

608.5.3 Pursuant to Rules of the FIS Points, the organising nation may register more than the double quota of participants other nations may also register more than the double quota, by invitation.

608.5.4 If the organising nation is unable to fill their legitimate quota other nations may be invited to participate with a double quota, at the invitation of the organising nation.

608.6 Allotment into groups and start order

608.6.1 In each group each participating nation is allotted one starting place max.

608.6.2 If more than 15 nations have registered, the following principles apply:

> Group 1: The first group will contain one athlete from each nation registered. Each nation is allotted one start place only.
> Group 2 - 3 - 4: Same as group 1.
> Last group: The last group consists of athletes from the organising nation, with its double quota. If the total number of competing athletes is thereby exceeded, a separate last group will be formed, using the same procedure as in Group 1.

608.6.3 In U16 - U14 races with few participants (see art. 608.5.4), the draw follows the principles described for the double quota of organising nations.

608.6.4 The team leaders are responsible for the identification of participants in each group.

608.6.5 Each group is drawn separately

608.6.6 Start order 2nd runs - The best 30 of the 1st run start in the reversed order.

608.7 U16 - U14 Events

608.7.1 U16 - U14 Events may include Slalom, Giant Slalom, Super-G, Parallel, and Kombi events and may also have a team competition.

608.7.2 Except where noted in ICR 608 for Youth the Alpine Rules in ICR are to be followed.

608.7.3 Team competitions may be conducted for U14 and U16. Such team competitions should be described as “Specifications for Youth Team Competitions”.

608.7.3.1 For the team evaluation, only the team declared at the first team captains meeting as "A" will be considered.

608.8 Equipment

608.8.1 All equipment used by Youth is governed by the FIS Specifications for Competition Equipment.

608.8.2 Youth are required to wear a crash helmet that conforms to the FIS specifications for competition equipment.

608.9 Border Regions

U16 - U14 events across nearby border regions, as long as they involve only neighbouring regional ski associations, are to be registered in writing with the FIS.

608.10 Club Competitions

Club competitions, so long as they really involve only teams from various clubs, are to be registered in writing by the organising club with its National Ski Association.

608.11 Parallel Events

The FIS ICR for the running of Parallel Events (art. 1220) applies.

608.12 Kombi

The U16 - U14 Kombi is an internationally recognized event that consists of a mixture of standard turns and gates. The event meets developmental needs for this age group, creating a tactical awareness by blending sections of different gates in a flowing, rhythmical, constantly changing pattern. Results may be determined by combined times of each run, or each run may be classified separately. The OC must indicate the method in advance.

608.12.1 Course Setting

608.12.1.2 The Course Setter and Jury are to provide an interesting but safe course.

608.12.1.3 The competitor´s speed must be controlled when transitioning from one section to a different section and the course setting should allow skiers a smooth transition from jumps or waves back into the course.

608.12.2 Kombi Design

There can be 2 different forms of the Kombi:
SL / GS Format (technical orientation) Setting with stubbies, SL gates and GS gates or coloured ground indicators and GS / SG Format (speed orientation). Setting with GS and SG gates or coloured ground indicators. The selected race style must be announced on the race notice prior to the race and again at the first team captains meeting.

608.12.3 SL / GS Kombi: Technical Data

Slalom Skis are recommended to be used for SL/GS Kombi and the OC must announce in advance the type of Kombi in order to enable correct ski selection.

608.12.3.1 Terrain and Vertical drop.

Use U16 - U14 GS slope, vertical drop between 140 - 200 meters

608.12.3.2 Gates

Gates consist of two poles. The outside gate must be the same type as the turning gate (stubby gate with stubby gate, SL gate with SL gate, GS panel with GS panel)

- Consecutive gates must alternate in red and blue.
- SL gates must have a minimum distance of 4m and max. 6m.
- GS gates must have a minimum distance of 4m and a max. 8m.
- SL Minimum distance between turning gate to turning gate 0.75m.
- SL Maximum distance turning gate to turning gate 12m.
- GS Minimum distance turning gate to turning gate. No minimum restriction
- GS Maximum distance turning gate to turning gate 20m.

608.12.3.3 Course characteristics and recommendations:

- Minimum of 30 turns
- Recommended to have a minimum of 5 different sections.
- Slalom skis recommended
- The course should test the skier’s ability to react and adapt to an ever changing rhythm and radius, but allow the competitors smooth transition between the various sections of gates.

- Building terrain is optional but not necessary as the course itself should apply enough demand. Use creativity with available terrain.
- Include a minimum of one jump
- Avoid gates that cause sudden braking and deceleration.
- Use the entire slope and natural terrain and skiing across the fall line as often as possible
- It is recommended to use only a single pole for vertical combinations
- The first and last gates should lead the skier comfortably.
- There should be at least one section of stubby gates.
- Forerunners or course testers should be available for course setting.

608.12.4 *GS / SG Kombi: Technical Data*

Giant Slalom Skis are recommended to be used for GS/SG Kombi and the OC must announce in advance the type of Kombi in order to enable correct ski selection.

608.12.4.1 *Terrain and Vertical drop.*

Use homologated GS course, 250 meters maximum vertical drop.

608.12.4.2 *Gates*

- Gates consist of two poles. Outside gate must be the same as turning gate.
- Consecutive gates must alternate in red and blue.
- GS gates must have a minimum distance of 4m and a max. 8m.
- SG gates must have a minimum distance of 6m and a max 8m.
- GS turning gate to turning gate minimum 10m maximum 20m
- SG turning gate to turning gate minimum 15m maximum 28m

608.12.4.3 *Course characteristics and recommendations:*

- Number of Direction changes 10% to 12% of Vertical drop.
- Recommended to have 3-5 different sections.
- Giant Slalom skis recommended.
- The course should test the skier’s ability to react and adapt to an ever changing rhythm and radius, but allow the competitors smooth transition between the various sections of gates.
- Building terrain is optional but must allow course to flow smoothly.
- Include a minimum of one jump
- Avoid gates that cause sudden braking and deceleration.
- The first and last gates should lead the skier comfortably.
- Forerunners or course testers should be available for course setting.

608.12.5 *Kombi Inspection*

A normal competitor's inspection and with a time limit established by the Jury is suggested. The concept is to test reaction and adaptability from the normal amount of inspection time.

608.12.6 *Number of runs*

The OC and Jury should decide on the number of runs by the first team captains meeting. Depending on weather and course conditions it is recommended that entries up to 140 competitors should be 2 runs and entries over 140 competitors should be one run.

608.12.7 *Rules*

The ICR Slalom and Giant Slalom rules apply for running of the Kombi race except as modified in art. 608.

608.12.8 *Starting order*

By team seeding.

608.12.9 *Gate judging*

A sufficient number of gate judges should be present. For the Stubby sections it is recommended to have one gate judge for every two gates. It is also recommended to spray a blue line on the inside of the gate to help to identify straddles.

610 Start, Finish, Timing and Calculations

611 Technical Installations

611.1 Communications & Cabling

In all international competitions, it is highly recommended that there is multiple communications (telephone or radios, etc.) between the Start and Finish. Voice communication between Start and Finish must be assured by fixed wire connection or radio. In case of radio, this must be on a separate channel from that used by any other function of the OC.

In Olympic Winter Games and FIS World Championships all communications and timing connections between Start and Finish must be assured by fixed wiring.

611.2 Timing Equipment

For all events in the FIS Calendar, electronic timers, start gates and photocells homologated by the FIS must be used. A list of these approved devices will be published. Races using timing equipment other than those on the homologated FIS list will not be considered for FIS points.

Specifications and procedures for timing are more fully described in a separate FIS Timing Booklet.

611.2.1 *Electric Timing*

For all international competitions, FIS World Cup, FIS Continental Cups and FIS competitions, two synchronised electronically isolated timing systems operating in time-of-day must be used. One system will be designated system A (main system), the other system B (back up system) prior to the beginning of the race.

Time of day times must be immediately and automatically sequentially recorded on printed strips at the maximum precision of the timing device according to the requirements for homologation. The final result is calculated by subtracting the start time from the finish time for each skier's run and is then expressed to 1/100th (0.01) precision by truncating the calculated net time on course.

All times used for the final result must be from system A. If there is a failure of system A, a calculated net time from system B must be used following the same procedure as set out in art. 611.3.2.1. It is not

permitted to substitute time-of-day times from system B for use with system A for the purpose of net time calculations.
For all events, system A must be connected to its respective start gate contact. System B must be separately connected to another electronically isolated start gate contact.
Refer to the FIS Timing Booklet for more details regarding cabling and complete wiring descriptions, diagrams and start gate installations.
All timing equipment and technical installation should be set up or protected in such a way that danger to the competitors is avoided where possible.
Synchronisation of the timing systems must occur within 60 minutes of the start of each run. Synchronisation of all systems must be maintained throughout each run. Timers must not be re-synchronised during any run.

611.2.1.1 *Start Gate*

The start gate must have separate electronically isolated switch contacts for triggering the start inputs of both system A & B.
If a start gate or start wand requires replacement during a run, it must be replaced with identical equipment in the same position

611.2.1.2 *Photocells*

For all events, there must be two photocell system(s) homologated by the FIS installed at the finish line. One is connected to system A. The other is connected to system B.
Procedures and regulations for start gates and photocells are found in the FIS Timing Booklet.

611.2.1.3 *Start Clock*

For DH, SG and GS, the use of a start clock that provides at least an acoustic countdown signal on the fixed start interval as prescribed by the Jury should be used as an aid to race management. This is mandatory for all Level 0,1 and 2 races.

611.2.2 *Hand Timing*

Manual (hand) timing, completely separate and independent of the electronic timing, must be used for all competitions listed in the FIS Calendar. Stopwatches or hand operated battery powered timers that are installed at both the start and the finish and capable of expressing times to at least 1/100th (0.01) precision qualify as proper hand timing devices. They must be synchronised prior to the start of each run, preferably with the same time-of-day as system A and system B. Printed records, either automatic or hand-written, of recorded hand times must be immediately available at the start and at the finish.

611.2.3 *Presentation of times*

Organisers should provide appropriate facilities for continuous presentation of all registered times of all competitors.

611.2.4 *Timing without Cable*

For FIS Level 3 events only, it is permitted to use homologated timing equipment in such a way that hill cable connection between start and finish is not required. Refer to the FIS Timing Booklet for a detailed discussion of how this is possible.

611.3 Timing

611.3.1 With electronic timing, the time is taken when a competitor crosses the finish line and triggers the beam between the photo cells.
In case of a fall at the finish where the competitor does not come to a full stop, the time can be taken without both of the competitor's feet having crossed the finish line.
For the registered time to become valid, the competitor must immediately completely cross the finish line with or without skis. With hand timing the time will be taken when any part of the competitor crosses the finish line.
The finish controller determines the correctness of passage across the finish line.

611.3.2 In the case of a failure of the main electronic timing system (system A), the results of the electronic back-up system (system B) will be valid as per art. 611.2.1. For the Olympic Winter Games, FIS World Ski Championships and FIS World Cup, a synchronised electronic timing system with printers, connected to the starting gate and to the photocells at the finish is obligatory.
In case of a failure in the lines of the timing system between start and finish, this back-up system will allow the calculation of the times to 1/100ths of a second.
In the case that calculated net times from either system A or system B are not available for a competitor, the calculated net manual time as per art. 611.3.2.1 will be considered valid.

611.3.2.1 Utilisation of times taken by hand

Hand times may be used in the official results after a correction has been calculated.
Calculation of the correction:

Calculate the difference between the times taken by hand and the electronic times of the 5 competitors starting before the missing time and the 5 starting after or if necessary, the 10 nearest competitors.
The sum of the 10 time differences is divided by 10 and rounded up or down to give the correction which must be applied to the hand time of the competitor without an electronic time.

611.3.2.2 Photo Finish

A Photo Finish System may be used to determine a competitor´s finish time. In case of a failure of system "A" and "B", and where the competition has been recorded by the Photo Finish System, this time must be used in place of hand-timing using a correction factor. The correction factor is the difference between the time taken by the Photo Finish System and the electronic times (where possible) of the 3 competitors before the missed time. Where there is not 3 previous competitors then the time of a competitor(s) immediately after the missed time can be used.
The sum of the 3 (or less) time differences divided by 3 (or less) is applied to the photo finish time of the competitor without electronic time.
The photo finish time is taken when any part of the competitor´s body first crosses the finish line. The photo finish result is to be provided to the Jury only.

611.3.3 The official timing strips from the printer will be given to the Technical Delegate for review. They will be kept by the OC until the official approval of the race or after any appeal dealing with timing or race results.
A technical timing report form as prescribed by the FIS must accompany the race results and must be reviewed and sent by the chief of timing and reviewed and confirmed by the TD as his approval of the race.
All printed records from system A, system B and hand timing must be retained by the OC for a period of three (3) months after the competition or after any appeal dealing with timing or race results.

611.3.4 When the official printing timer allows manual input or correction of a time, some type of indication (star, asterisk or other) concerning any effected change must be printed on all timing documentation.

611.3.5 Computer software calculating net times must use the precision of the time of the day as used in the timing device.

611.4 Private timing and speed measurement equipment of the Teams

Any request to install such equipment has to be made to the Jury by the team captain concerned, and the Jury decides concerning approval of the installation. At Olympic Winter Games, FIS World Ski Championships and FIS World Cup only the organisers timing equipment is permitted.

612 Start and Finish Officials

612.1 The Starter

The starter must synchronise his watch with those of the assistant starter and by telephone or radio with the chief timekeeper within ten minutes of the start. The starter is responsible for the warning signal and the start command as well as for the accuracy of the intervals between these signals. He assigns the supervision of the competitors to the assistant starter.

612.2 The Assistant Starter

The assistant starter is responsible for calling the competitors to the start in their correct order.

612.3 The Start Recorder

The start recorder is responsible for recording the actual start times of all competitors.

612.4 The Chief Timekeeper

The chief timekeeper is responsible for the accuracy of the timing. He synchronises the watches with the starter as shortly before and after the race as is possible. He must publish unofficial times as quickly as possible (on the score-board, etc.). If the electric timing fails, the chief timekeeper must communicate immediately with the start referee and the TD.

612.5 The Assistant Timekeeper

Two assistant timekeepers operate stop watches according to art. 611.2.2. One assistant timekeeper maintains a complete record with the registered times of all competitors.

612.6 The Finish Controller

The finish controller has the following duties:
- Supervision of the section between the last gate and the finish
- Supervision of the proper crossing of the finish line
- Recording of the order of finishing of all competitors who complete the course

612.7 The Chief of Calculations

The chief of calculations is responsible for quick and accurate calculation of results. He supervises the immediate duplication of unofficial results and the publication of official results after expiration of the protest interval, or after any protests have been dealt with.

613 The Start

613.1 The Start Area

The start area must be closed off to everyone except the starting competitor, accompanied by only one trainer and the start officials.
The start area must be protected appropriately against inclement weather. A special roped off area must be provided for trainers, team captains, service personnel etc., in which they may take care of the waiting competitors without being interrupted by the public. An adequate shelter must be prepared for the competitors waiting for the call to start.
The competitor enters the defined start hut with both skis attached without any covers on them.

613.2 The Start Ramp

The start ramp should be prepared in such a way that the competitors can stand relaxed on the starting line and can quickly reach full speed after leaving the start.

613.3 Start Procedure

No official or attendant who could possibly give an advantage to or disturb the starting competitor can be behind him. All outside help is forbidden. By order of the starter, the competitor must plant his poles in front of the start line, or where indicated. The Starter must not touch the competitor at the start. Pushing off from the start posts or other aids is forbidden and the competitor must start only with the help of his ski poles.

613.4 Start Signals

10 seconds before the start, the starter will tell each competitor "10 seconds". Five seconds before the start, he should count "5, 4, 3, 2, 1" and then give the start command "Go - Partez - Los".
(For Slalom see art. 805.3).
If possible, an automatic audible signal is to be used (art. 611.2.1.3). The starter will let the competitor see the start clock.

613.5 Start Timing

The start timing must measure the exact time the competitor crosses the start line with his leg below the knee.

613.6 Delayed Start

A competitor who is not ready to start on time will be sanctioned. The start referee may however excuse such a delay if, in his opinion the delay is due to "force majeure".
For example, breakdown of a competitor's personal equipment or minor sickness of a competitor does not constitute "force majeure".
In case of doubt, the Jury may allow the start provisionally.

613.6.1 The start referee makes the decisions after consultation with the Jury (according to art. 613.6.2 and 613.6.3) and must record the start numbers and names of competitors who were not allowed to start because of late appearance, or who were allowed to start in spite of late appearance, or who were allowed to start provisionally.

613.6.2 In the case of fixed start intervals, the delayed competitor may start at the fixed interval after he has reported to the start referee, in accordance with the decision of the Jury. The Start Referee informs the Jury as to when (after which start number) a delayed competitor is starting.

613.6.3 In the case of irregular start intervals, the delayed competitor will start according to art. 805.3. The start referee informs the Jury as to when (after which start number) a delayed competitor is starting.

613.7 Valid and False Starts

In competitions with a fixed start interval the competitor must start on the start signal. The start time is valid if it occurs within the following limits: 5 seconds before and 5 seconds after the official start time. A competitor who does not start within that space of time will be disqualified.
The start referee must inform the Referee of the start numbers and names of the competitors who made a false start or have contravened the starting rules.

614 Course and Competition

614.1 Course

614.1.1 Technical Parts of a Competition Course

Start and finish installations, television towers, measuring equipment, sponsor advertising equipment etc. are necessary items for a competition.

614.1.2 Course Setting

614.1.2.1 Assistance

Assistance must be provided for the course setter, at a time to be fixed by the Jury, so that he can concentrate on the actual course setting and not be distracted by fetching poles, etc.
The Chief of Course equipment must provide enough of the following:

- enough blue and red slalom poles
- a corresponding number of gate panels, divided by colours
- hammers, drills, gate-keys, wedges etc.
- enough gate numbers
- colouring substance for marking the position of the poles.

614.1.2.2 *Marking of the gates*

The positions of the gate poles may be marked with an easily recognisable colouring substance which remains visible throughout the entire race.

614.1.2.3 *Numbering the gates*

The gates must be numbered from top to bottom of the course. Start and Finish are not counted.

614.1.2.4 *Marking of the course and terrain*

In Downhill and in Super-G the course should be marked using:

- on the inside and/or outside of the racing line before and after the gate
- small pine needles or similar material spread on the course

and/or

- coloured dye used vertically from gate to gate as well as horizontally across the course or the inside and/or outside of the racing line before and after the gate notably on the approaches indicating changes in terrain, jumps, etc.

614.1.2.5 *Spare Poles*

The Chief of Course equipment is responsible for the availability and correct placing of enough spare poles. The poles are to be placed so that the competitors are not mislead by them.

614.1.3 *Warm up Slope*

Appropriate warm up slopes should be made available.

614.1.4 *Closing and Modification of the Course*

A course is closed from the time the course setting begins. Nobody except for the Jury is permitted to change gates, gate panels, markings, etc. or modify the course structure (jumps, bumps, etc.) on a closed course.
Competitors are not permitted to enter a closed competition course.
Trainers, servicemen etc., who are allowed on a closed competition course are to be decided by the Jury.
Photographers and camera teams are allowed into the closed course area for the necessary documentation of the competition. Their total number can be limited by the Jury. They will be located by the Jury where possible and must remain only in this area.
The Jury or the Organising Committee may close a course or sections of a course to competitors, trainers, media and service personnel outside of the actual competition or training times for preparation and maintenance purposes.

614.1.5 *Course changes*

In case of necessary changes on the course, such as small relocation of gates, an additional inspection or training run is not necessary.
Details must be communicated to all team captains and competitors must be informed by the Start Referee at the start.

614.1.6 *Downhill and Super-G at FIS World Ski Championships and Olympic Winter Games*

Alpine men's and ladies Downhill and Super-G competitions should be carried out on independent courses, but start and finish installations and short sections of the courses can be used for both genders.

614.2 Competition

614.2.1 *Passage of the Gates*

A gate must be passed according to art. 661.4.1.

614.2.2 *Interdiction to Continue after a Gate Fault*

If a competitor misses a gate, he must no longer continue through further gates.

614.2.3 *Interdiction to Continue after a competitor stops*

If a competitor comes to a complete stop (e.g. after a fall), he must no longer continue through previous or further gates. This interdiction is valid in all events with a fixed start interval (Downhill, Super-G, Giant Slalom). Only exception is for Slalom (art. 661.4.1), as long as the competitor:

- does not interfere with the run of the next competitor or,
- has not been passed by the next competitor.

614.2.4 *Loss of one ski*

If a competitor loses a ski without having committed a gate fault or without coming to a complete stop, he may continue, as long as he

- does not interfere with the run of the next competitor or,
- has not been passed by the next competitor.

See also details in art. 615.3, 661.4.1, 804.3, 904.3.

614.3 Inspection

614.3.1 *Jury inspection*

On race day, the Jury inspects the course and has to confirm the FIS programme for the day. Team Captains may accompany the Jury.

614.3.2 *Competitor inspection*

The competitor inspection is held after Jury inspection and after the Jury has opened the course and is normally inspected, from top to bottom of the course. The course must be in racing condition from the time the competitor's inspection starts and the competitors must not be disturbed during the inspection by workers on the course or similar. The competitors are authorised to study the final setting of the course by either skiing down at the side of the course at low speed, or side slipping through the gates (inspection). Skiing through gates or making practice turns parallel to those required by gates on the course is not allowed. Competitors must carry their start numbers. Fenced, roped or blocked off sections of the course or gates must be respected. By the end of the inspection time, Competitors have to be outside the race course. Competitors are not permitted to enter the course on foot without skis.

614.3.3 *Jury decisions*

The time and duration of the Competitors Inspection is determined by the Jury and scheduled at the team captains meeting. If necessary (e.g. because of special weather conditions), the Jury may decide on special methods of competitors inspection.

615 The Finish

615.1 The Finish Area

615.1.1 The finish area should be plainly visible to competitors approaching the finish. It must be wide with a gently sloped smooth run-out.

615.1.2 In setting the course with gates particular attention should be paid to directing competitors across the finish on a natural line adapted to the terrain.

615.1.3 The finish area is to be fenced in. Any unauthorised entry is not allowed.

615.1.4 Finish installations and closures should be set up or secured through suitable protection measures.

615.1.5 The organiser must define by a clearly visible red line an "inner finish area" and ensure that the competitors are able easily to reach this area on skis.

615.1.6 For competitors who have finished their runs, a special area separated from the actual finish, is to be provided. In this area or corridor, it should be possible to make contact with the press (print, radio, TV and film) located in the media corridors.

615.1.7 The competitor must leave the finish area through the official exit with all the competition equipment used in the race.

615.2 The Finish and its Markings

The Finish is marked by two poles or vertical banners which may be connected by a horizontal banner. In Downhill and Super-G races, the finish must be no less than 15 metres wide and in Slalom and Giant Slalom no less than 10 metres wide. In exceptional cases, the Jury may decrease this distance on the spot for technical reasons or because of the terrain. The width of the finish is considered to be the distance between the two finish poles or banners. The supports used to mount the timing devices must also be at least this far apart.

The timing supports can usually be placed behind the finish poles or banners, on the downhill side. The finish line between the timing cells must be clearly marked horizontally with colouring substance.

615.3 Crossing of the Finish Line and Recording of the Times

The finish line must be crossed:

- on both skis or
- on one ski or

- with both feet in case of a fall between the last gate and the finish line. In this case the time is taken when any part of the competitor's body stops the timekeeping system.

615.4 Report

The Finish Referee must make a report to the Referee immediately after the race or the official training.

616 Microphones

Within the areas of Start and Finish as well as in the area of the closed course, the use of microphones installed without the agreement of the organiser ("roving" and so-called "gallows", microphones set into cameras or other technical instruments) is forbidden in training as well as in the race.

617 Calculation and Announcement of Results

617.1 Unofficial Times

Times taken by the timekeepers must be considered unofficial times. They should be posted on a score-board which should be readily visible from the area provided for the competitors who have finished, and from the press area. Whenever possible, unofficial times should be announced to the public over loud-speakers.

617.2 Announcement of Unofficial Times and Disqualifications

617.2.1 As soon as possible after completion of the race, unofficial times and disqualifications must be published on the official notice board at the finish.
The time limit for protest is counted from the moment of this announcement. (art. 643.4, 643.5)

617.2.2 Oral announcement of disqualifications may replace the publication on the official notice board.
It can be decided that protests can be delivered verbally to the Referee at the Finish within 15 minutes after the announcement of the disqualification. Protests submitted after this are considered null and void. The team captains must be informed beforehand of the announcement and protest procedure.

617.3 Official Results

617.3.1 Results are determined from the official times of those competitors who have been officially classified.

617.3.2 Combined results are calculated by adding together the race times obtained in each event of the combined event. (or by adding the race points)

617.3.3 If two or more competitors have the same time or the same number of points, the competitor with the higher start number must be listed first on the official list of results.

617.3.4 *The official result list must contain:*

- the name of the organising club or association
- the name of the competition, the site, event, category and gender
- the date of the race
- all technical data such as the name of the course, altitude at start and finish, vertical drop, FIS homologation number and, for Downhill and Super-G, the length of the course
- the names and nations of the members of the Jury
- for each run, the names and nations of the course setter and the forerunners, the number of gates (Slalom, Giant Slalom and Super-G between brackets number of direction changes) and the start time
- the weather, the snow conditions on the course and the air temperature at race start and finish recorded at time of race start.
- all details concerning the competitors, ranking, start number, code number, name and first name, nation (and possibly club), time and race points
- the start number, code number, name, first name and nation of those competitors who were not at the start, did not finish or were disqualified in each run
- the names of the official service companies, e.g. timing company, computer service etc.
- the codex and F value
- the penalty calculation sheet
- the signature of the Technical Delegate

617.3.5 Nations must be indicated by the designated FIS code of three capital letters (see FIS Bulletin or FIS Website).

618 FIS Points and Participation at FIS competitions

Reference is made to the Rules for the FIS Alpine Points (integral part of the ICR).

619 Award Ceremony

The official award ceremony must not be held before the completion of the race and not before the Technical Delegate has authorised it.
The organiser has the right to present the probable winners before this time. This presentation is unofficial and is organised at a place different from that of the official award ceremony.

620 Start Order

For the Olympic Winter Games, FIS World Ski Championships, FIS World Cup and the FIS Continental Cups special regulations may be issued.

621 Group Draw and Start Order

621.1 The classification of competitors who are present is made by the Jury.

621.2 The FIS points list worked out by FIS must be used for the classification of competitors. If a competitor does not appear in the last valid FIS points list, he will be assigned to that group of competitors without FIS points.

621.3 The starting order of the competitors in all alpine competitions is determined by their FIS points (Downhill, Slalom, Giant Slalom, Super-G and Alpine Combined). A first group of a maximum of the 15 best competitors present regardless of nationality will be drawn.
The group may be increased if two or more competitors share the 15th rank.
All remaining competitors start in order of their FIS points. All competitors without FIS points will be drawn in the last group.
If in the first 15 competitors present, the points difference between one and the next competitor is too great; the Jury will decide the number of competitors in the first group. The rest will start in the order of their FIS points.

621.3.1 Youth Competition (see art. 608.6)

621.3.2 Starting Order at National Championships (NC)
As an alternative to art. 621.3 for National Championships the Jury may permit the draw/choice of start numbers to be as follows:
For Slalom and Giant Slalom the first 15 ranked competitors according to current FIS points will be divided into two groups (1 to 7 and 8 to 15) Start numbers will then be drawn within the groups by double draw.
For Downhill, Super-G and Alpine Combined the first 15 ranked competitors according to current FIS points, in ranked order, may choose a start number between 1 and 30. The remaining start numbers between 1 and 30 will then be drawn amongst the competitors ranked 16 to 30 according to current FIS points. All other competitors start in the order of their FIS points.

621.3.3 Starting order Alpine Combined
If the Slalom run takes place before the Downhill or Super-G, competitors who are shown as DNS, DNF or DSQ will start in the Downhill or Super-G with their original bib after the last qualified competitor in the Slalom Run, with the exception of Olympic Winter Games, FIS World Ski Championships, World Cup and European Cup competitions. The starting order of AC competitions is determined by AC FIS points. Exception: AC competitions at NC and NJC may be seeded by DH or SG FIS points.

621.4 If the number without FIS points is too great, the Jury must divide them into several groups. In this case, each nation announces the groups to which it wishes its competitors to belong. Each group is then drawn separately. The Jury should whenever possible, take into account the observations made during the official downhill training and must divide the competitors from several nations fairly between the groups without FIS points. As a rule, each nation who has entered competitors without FIS points puts one competitor into the first group of competitors without FIS points.

621.5 The Jury has the right to change the starting order if they consider the condition of the course warrants it.

621.6 The draw must take place on the day before the race. For night races, the draw must take place at the latest before noon on the race day.

621.7 The first group and the groups without FIS Points in downhill training must be drawn every day.

621.8 The draw (first group and groups without FIS points) must be held in a team captains' meeting.
A double draw is recommended with a simultaneous draw of the start number and the name of the competitor.

621.9 The Jury may allow a computer-assisted draw. A representative of each nation is required to sign the team entry at the team captains' meeting before the draw is conducted by computer.

621.10 Starting Order in Extraordinary Conditions (Snow Seed)

In extraordinary conditions, the Jury may change the starting order of a Downhill race, a Giant Slalom or a Super-G (when snowing, etc.). A group of at least 6 competitors, nominated in advance, start before start number one.
These 6 competitors are drawn from among the last 20% of the start list. They will start in reverse order of their start numbers.

621.11 Starting Order for the 2nd Run

621.11.1 In competitions with two runs, the starting order for the second run is determined by the result list of the first run except for the first 30 places.

621.11.2 For the first 30 places the starting order is as follows:

- the 30th in the result list starts 1st
- the 29th in the result list starts 2nd
- the 28th in the result list starts 3rd
- the 27th in the result list starts 4th
- the 1st in the result list starts 30th
- from the 31st onward according to the result list of the first run.

If more than one competitor is ranked 30th, the competitor with the lowest start number will start first.

621.11.3 Starting Order for the 2nd Run at FIS Races

The Jury has the right to decide no later than one hour before the start of the first run; whether the reversed order shall be reduced to the first fifteen placed competitors from the first run.

621.11.4 A start list for the second run must be published in good time and made available to teams and officials at the start for the second run.

621.12 Double Entries

If a competitor has started in a competition he cannot appear as DNS 1 in another competition on the same day, except for a DH training. If a competitor is entered into and drawn for a DH competition and subsequently leaves this competition in order to participate in another DH competition, he will not be permitted to return to the first DH competition. The FIS Office will refer all double entries to the FIS Council for appropriate action.

622 Start Intervals

622.1 Regular Intervals

In Downhill, Giant Slalom and Super-G, competitors will normally start at regular intervals of 60 seconds; for Slalom see art. 805.1. The Jury may fix different intervals.

622.2 Special Start Intervals

The start intervals in Downhill, Super-G and if necessary, Giant Slalom may be changed under the following conditions:

622.2.1 The time extension must be used for sensible TV transmission of interesting sections of the entire course.

622.2.2 The start interval is determined by the Jury.

622.2.3 The start interval must not be less than 40 seconds in Downhill and Super-G and 30 seconds in Giant Slalom.

622.2.4 Further exceptions to art. 622.2.2 and 622.2.3 can be made only by the FIS Council (World Cup: According to World Cup Rules).

623 Re-runs

623.1 Prerequisites

623.1.1 A competitor who is obstructed while racing must stop immediately after the incident takes place and report this to the nearest gate judge. He may apply to any member of the Jury for a re-run. This claim can also be made by the team captain of the obstructed competitor. The competitor should make his way to the Finish along the side of the course.

623.1.2 In special situations (e.g. in case of missing gates, failure of the timekeeping system or other technical failures), the Jury may grant a re-run.

623.1.3 When a competitor is waved down by a yellow flag he must stop immediately. He has the right to a re-run, provided that the Jury considers this possible from an organisational point of view. The Jury should ensure that the competitor's re-run takes place before the last competitor on the start list of the race, or training run in the case of Downhill (see art. 705.2 and 705.3).

623.2 Grounds for Interference

623.2.1 Blocking of the course by an official, a spectator, an animal or other obstruction.

623.2.2 Blocking of the course by a fallen competitor who does not clear the course quickly enough.

623.2.3 Objects in the course such as a lost ski pole or the ski of a previous competitor.

623.2.4 Activities of the first aid service which obstruct the competitor.

623.2.5 Absence of a gate knocked down by a previous competitor that has not been promptly replaced.

623.2.6 Other similar incidents beyond the will and control of the competitor, which cause significant loss of speed or a lengthening of the racing line and consequently affect the competitors time.

623.2.7 Interruption by an official with a Yellow Flag (see art. 623.1.3).

623.3 Validity of a Re-run

623.3.1 If the Referee or another Jury member is unable to question the appropriate officials immediately or to judge the justification for the re-run he may grant a provisional re-run, to avoid delay for the competitor. This re-run will be valid only if it is subsequently confirmed by the Jury.

623.3.2 If the competitor was already disqualified before the incident entitling him to a re-run, the re-run is not valid.

623.3.3 The provisional or subsequently approved run remains valid even if it proves slower than the obstructed one.

623.4 Start Time of the Re-run

623.4.1 In the case of fixed start intervals, the competitor must start at the fixed interval, after he has reported to the start referee, in accordance with the decision of the start referee.

623.4.2 With non-fixed start intervals, the procedure is in accordance with the provisions of art. 805.3.

624 Interruption of the Run or Training

If an interrupted run cannot be finished on the same day, it is to be treated as a terminated run.

624.1 By the Jury

624.1.1 to allow course maintenance

624.1.2 for unfavourable or inconsistent weather and snow conditions

624.1.2.1 The race is to be restarted as soon as the work on the course has finished and if the weather and snow conditions have changed so that a fair competition can be assured.

624.1.2.2 A repeated interruption of the race ordered for the same reason should lead to a termination. A Downhill, a Super-G, as well as one run of Slalom or Giant Slalom may not last longer than four hours.

624.2 **Brief Interruption**

Each member of the Jury is entitled to order a brief interruption of the run, including at the request of a gate judge.

625 Termination of a Competition

625.1 **by the Jury**

- if the competitors are significantly affected by outside disturbing influences.
- if conditions arise that interfere with the fairness of the race or if the proper conduct of the race may no longer be guaranteed.

626 Report

For all interrupted or terminated competitions (art. 624 and 625), a full and detailed report is to be made by the TD to the FIS and the organising National Ski Association. The report must contain a well-founded recommendation, as to whether the terminated competition is to be taken into consideration for FIS points or not.

627 Not Permitted to Start (NPS)

A competitor will not be permitted to start (NPS) in any FIS International Ski competition who:

627.1 wears obscene names and/or symbols on clothing and equipment (art. 206.4) or behaves in an unsportsmanlike manner in the start area (art. 205.5, 223.1.1)

627.2 violates the FIS rules in regard to the FIS Specifications for Competition Equipment and Commercial Markings (art. 222 and 207). (Exception art. 606.2 Competition Suits)

627.3 refuses to undertake a FIS required medical examination (art. 221.2)

627.4 trains on a course closed for competitors (art. 614.1.4),

627.5 in training for Downhill has not participated in at least one timed training run (art. 704.8.3)

627.6 does not wear a crash helmet that conforms to the Specifications for Competition Equipment (art. 606.4), or does not have ski brakes on their skis (art. 606.3), does not wear or carry an official start number according to the rules. (art. 606.1)

627.7 was disqualified, (DSQ) did not start (DNS) or did not finish (DNF) in the first run. Alpine Combined FIS races are exempt from this rule. A competitor who was DSQ, DNS or DNF in the slalom run can start the speed event. If the speed event precedes the slalom run the exemption does not apply. (art. 621.3.3)

628 Penalties

A penalty will be assessed by the Jury especially where the competitor:

628.1 violate the rules governing advertising on equipment (art. 207.)

628.2 alters the start number (Bib) in a way which is not permitted (art. 606.1)

628.3 does not wear or carry the official start number according to the rules. (art. 606.1, 614.3)

628.4 skis through set gates or practices turns parallel to the course or violates in any way rules of competitors' inspection (art. 614.3)

628.5 is not ready to start on time or makes a false start (art. 613.6, 613.7, 805.3.1, 805.4, 1226.3)

628.6 violates rules of the start or starts in a manner that is not permitted by the rules (art. 613.3)

628.7 requests a re-run which proves not to be valid (art. 623.3.2)

628.8 continues to race after committing a gate fault or after a complete stop or violates the rule Loss of one Ski (art. 614.2.2, 614.2.3, 614.2.4)

628.9 fails to cross the finish line correctly (art. 615.3)

628.10 removes skis before crossing the red line (art. 206.5)

628.11 does not leave the finish area through the official exit with all the competition equipment used in the race (art. 615.1.7).

628.12 takes skis to the official ceremonies (art. 206.6)

628.13 receives outside help during a competition (art. 661.3)

628.14 wears obscene names and/or symbols on clothing and equipment (art. 207.1) or behaves in an unsportsmanlike manner in the competition area (art. 205.5, 223.1.1)

628.15 has actually started in a competition and is later determined by the Jury to have been in violation of art. 627 rules.

629 Disqualifications

A competitor will be disqualified if he:

629.1 participates in the race under false pretences

629.2 jeopardises the security of persons or property or causes actual injury or damage

629.3 does not pass through a gate correctly (art. 661.4) or does not start within the time limits defined by art. 613.7.

640 Protests

640.1 A Jury must only accept a protest if it is based upon physical evidence.

640.2 A Jury is only permitted to re-evaluate its previous decision where new evidence exists that relates to the original Jury decision.

640.3 All Jury decisions are final except those that may be protested under art. 641. Appeals can be made as per art. 647.1.1.

641 Types of Protests

641.1 Against admittance of competitors or their competition equipment,

641.2 Against the course or its condition,

641.3 Against a competitor or against an official during the race,

641.4 Against disqualifications,

641.5 Against timekeeping,

641.6 Against instructions of the Jury.

642 Place of Submittal

The various protests are to be submitted as follows:

642.1 Protests according to the art. 641.1 - 641.6 at the location designated on the official notice board or at a place announced at a team captains' meeting.

643 Deadlines for Submittal

643.1 Against the admittance of a competitor:

- before the Draw.

643.2 Against the course or its condition:

- not later than 60 minutes before the beginning of the race.

643.3 Against a competitor or competitor's equipment or against an official because of irregular behaviour during the competition:

- within 15 minutes after the last competitor has passed the finish.

643.4 Against disqualification:

- within 15 minutes after the posting or announcement of the disqualification.

643.5 Against the timekeeping:

- within 15 minutes after the posting of the unofficial result list.

643.6 **Against all instructions of the Jury:**

- immediately and no later than the deadlines for submittal of protest according to the art. 643.4.

644 Form of Protests

644.1 Protests are to be submitted in writing.

644.2 As exceptions, protests according to the art. 641.3, 641.4 and 641.5 can be made verbally (art. 617.2.2).

644.3 Protests must be substantiated in detail. Proof must be submitted and any evidence must be included.

644.4 CHF 100. -- or the equivalent in another valid currency must accompany the protest. This deposit will be returned if the protest is upheld, otherwise it goes to the account of the FIS.

644.5 A protest may be withdrawn by the protesting party before the publication of a decision by the Jury.
In this case, the money deposit must be returned. A withdrawal of the protest is not possible when the Jury or a member of the Jury takes, an intermediate decision for reasons of time, e.g. a decision "with reserve".

644.6 Protests not submitted on time in the correct manner or submitted without the protest fee will not be considered.

645 Authorisation

The following are authorised to submit protests:

- National Ski Associations
- Trainers
- Team Captains.

646 Settlement of Protests by the Jury

646.1 The Jury meets to deal with the protests at a predetermined place and time fixed and announced by it.

646.2 In dealing with a protest against disqualification (art. 661.4), the gate judge and, if needed, the gate judge of the adjacent gate combinations or other involved officials, the competitor in question and the protesting team captain or trainer must be invited to attend by the TD or Referee.
In addition any other requested evidence such as videotape, photos, and films should be checked.

646.3 At the vote on the protest, only the Jury members are to be present. The TD chairs the proceedings. Minutes of the proceedings are to be kept and signed by all voting members of the Jury. The decision requires a majority of all voting members of the Jury, not just of those present. In case of a tie, the TD's vote is decisive.

The principle of a free evaluation of the evidence is maintained. The rules on which the decision is to be based must be applied and interpreted in such a way that fair proceedings are guaranteed.

646.4 The decision is to be made public immediately after the proceedings by posting on the official notice board with the publication time stated.

647 Right of Appeals

647.1 The Appeal

647.1.1 *Can be made:*

- against the decisions of the Jury regarding monetary fines as per art. 224.11
- against the decision of the Jury to terminate a race (art. 625)
- against the recommendation of the Jury that a terminated race should count for FIS points
- against the official result. This appeal has to be directed exclusively against an obvious and proved calculation mistake.

647.1.2 Appeals must be submitted to the FIS Office.

647.1.3 *Time Limits*

647.1.3.1 Appeals against Jury decisions must be submitted to the Appeals Commission within 48 hours of their announcement.

647.1.3.2 The official results may be appealed to the Council via the FIS Office within 30 days for matters that are outside the competence of the jury.

647.1.4 *Decisions concerning appeals are taken by:*

- the Appeals Commission
- the FIS Court.

647.2 Postponing Effect

Evidence submitted (protest, appeal) will not cause a postponement of the sanction.

647.3 Submission

All appeals must be in writing. Proof and evidence are to be included. Appeals submitted after the deadlines (art. 647.1.3.1 and 647.1.3.2) will be declined by the FIS.

650 Rules regarding the Homologation of the Courses

650.1 General

All competitions must take place on FIS-approved courses. Exceptions may be granted on request.
Only the FIS Council can grant exceptions or deviations from the prescribed technical data.

The National Ski Association in question and the Sub-Committee for Alpine Courses submit the proposals. If exemptions are granted the exemption is valid from date of approval until revoked.

650.2 Request

The request for the homologation of a course is to be directed to the Sub-Committee for Alpine Courses through the appropriate National Ski Association.

650.3 Recipients

The request must be accompanied by the following documents in multi-page pdf format, sent or given to:

650.3.1 The chairman of the Sub-Committee for Alpine Courses

650.3.2 The appropriate National Ski Association

650.3.3 The applicant

650.3.4 The inspector in charge of the examination

650.4 Documents

The request for the homologation of a course must be accompanied by the following six documents:

650.4.1 A description of the course, containing:

- the name of the course
- the geographical location of the course
- the start point expressed in meters above sea level
- the finish point expressed in meters above sea level
- the vertical drop expressed in meters
- the surface length of the course expressed in meters
- the average gradient, the maximum gradient, the minimum gradient (in percentages)
- emergency evacuation arrangements for injured competitors
- possible water supply for the course
- possible helicopter landing sites
- artificial snow-making installations
- a description of the access facilities to the start and finish areas, and of the uphill transport with hourly capacity, (persons)
- a description of the start and finish areas including details of the terrain, aspect and facilities for journalists, radio and television commentators, and spectators, and description of the shelters for the competitors at the start and finish
- a description of the places requiring safety nets
- indications of the locations of the loudspeakers
- a description of the possibilities for auxiliary courses for the technical services, technical personnel, etc.
- evacuation distance to the nearest hospital in kilometres
- a description of the communication system and the available number of lines preferably with a circuit diagram showing:
  - underground cables
  - permanent air cable

- temporary air cable
- cross-section of lines
- number of outlets along the course
- connections between the finish area and the race office
- connections between the finish area and the press centre
- details about available radio apparatus
- connections between start and finish area

- contact address with telephone number, e-mail and fax numbers.

650.4.2 A map, minimum scale 1: 25,000, with contour lines and the course drawn on it.

650.4.3 A 1: 5,000 profile indicating the vertical drop and length of the course (contours at the same scale).

650.4.4 A large and comprehensive photograph on which the course is marked. It must be a genuine photograph and not a graphic representation from a prospectus. The size of the photograph shall be at least 18 x 24 cm. The photograph should be taken preferably from an opposite slope. If that is not possible, then an oblique aerial photograph will be acceptable.

650.4.5 A sketch of the entire course (1 : 5,000) with all details and data indicated, such as lift towers, groups of trees, snow-making hydrants, snow fences, steep sections, curves, trail intersections, etc. and information on elevations, section and resort names. The purpose of the sketch is primarily to provide the inspector with condensed information on the actual state of the course, any improvements planned and also the location of safety nets.

650.4.6 A certification that all the development/improvement work on the ski slopes subject to approval or re-approval has been made in accordance with the existing national laws and with local and national regulations relating to the environment.

a certification shall be provided only in case of:

- a first homologation, except if it is an already existing track or on land that needs no modification.
- a re-approval, only if additional, substantial work has been done.

650.5 Appointment of an Inspector

The chairman of the Sub-Committee for Alpine Courses will study the homologation request and appoint an inspector to examine the course. The inspector for Downhill courses must not belong to the country requesting a first homologation. The inspector for Downhill courses to be used for Entry League races should not belong to the country requesting a first homologation.

The courses proposed for homologation must comply with the technical requirements of the art. 701, 801, 901, 1001, 1102 and 1103.

Sufficient space must be provided on Downhill, Giant Slalom and Super-G courses, or on an emergency track or road or on the competition course itself, for the evacuation of competitors injured during the competition or training.

650.6 Homologation Procedure

650.6.1 *The Applicant*

As soon as the required documents are ready in pdf format, the applicant club will send the request for homologation through its National Ski Association to the chairman of the Sub-Committee for Alpine Courses or in agreement with the National Ski Association they deliver it, before the on-site inspection to the inspector, who will pass the copies to the right place. At the same time the applicant must remit the equivalent of CHF 150. -- per homologation to the National Ski Association.

This sum covers the administrative costs. The inspector's travel and accommodation (full board) expenses must be paid to him directly by the applicant. The travel from his home to the course site and back may be calculated as follows:

- Per travel day, CHF 100.--
- Train fare: first-class
- Travel in his own car: CHF 0.70 per kilometre
- Air travel: economy

650.6.1.1 The applicant (ski resort, owner, organiser, club) is responsible for the observance of applicable environmental regulations during development of the course including completion of any improvements required by the inspector.

650.6.2 *The National Ski Association*

The request for homologation prepared by the applicant must be submitted by its National Ski Association and then forwarded to the chairman of the Sub-Committee for Alpine Courses. If the inspector orders only minor improvements on the courses, the condition of the courses after completion of these improvements must be reported to the inspector by 31st October* of the current year. For more extensive work, the inspector will decide whether an additional inspection is necessary. Courses which have not been found to comply with the FIS specifications, and have not been homologated by 31st October* of the current year, may not be used in the following winter for competition. These competitions will be removed from the FIS Calendar.

*) = For the Southern Hemisphere by 30th April

650.6.3 *The Inspector*

After the request for homologation has been received by the chairman of the Sub-Committee for Alpine Courses, from the applicant via the National Ski Association, the chairman will appoint an inspector. The inspector immediately contacts the applicant about the time for his inspection and sends a copy to the appropriate National Ski Association. The inspector will receive a pdf copy of the homologation papers before his inspection. After his inspection, he writes his inspection report and marks the required improvements in red on the course plan. After checking all other documents, he sends the complete set of documents to the chairman of the Sub-Committee for Alpine Courses in multi-page pdf format. The latter will examine and ratify them. The homologation documents will be loaded on the FIS Website.

It is left to the discretion of the inspector to decide whether, in addition to the summer inspection, a second inspection in winter will be necessary in consideration of different conditions in winter. This applies especially to safety regulations and the placing of nets.

650.6.4 *Issue of the FIS Homologation Certificate*

If the inspection report is affirmative and no further work is needed, the chairman of the Sub-Committee for Alpine Courses will send the original of the homologation certificate to the applicant and a pdf copy to the appropriate National Ski Association, to FIS and the inspector. The homologation certificate itself sets out the name and type of the course and its technical data. The registration number of the certificate indicates the total number of homologated courses, the month and year in which the homologated certificate was issued. The expiry date is indicated.

650.6.5 *Expiration of the Application*

If work requested has not been completed within five years after the inspection is carried out and the homologation cannot be granted, the site (course) in question will be deleted from the list of pending homologation applications. For further consideration a new application is required.

650.6.6 *Validity of the FIS Homologation Certificate*

650.6.6.1 *Downhill and Super-G*

The certificate is valid from the date of issue: it will expire on 1st November*, five (5) years later. A re-homologation must be carried out before a new certificate is issued.
*) = For the Southern Hemisphere 1st July.

650.6.6.2 *Slalom and Giant Slalom*

The certificate is valid from the date of issue: it will expire on 1st November*, ten (10) years later. A re-homologation must be carried out before a new certificate is issued.
*) = For the Southern Hemisphere 1st July.

650.6.6.3 *For all Events*

Homologation certificates are valid (within periods in art. 650.6.6.1 and 650.6.6.2) as long as no natural or artificial changes or changes in the regulations or technical requirements have occurred.
Natural changes can consist of:
- erosion, land slides or the terrain becoming overgrown.

Artificial changes are:
- the construction of buildings, lifts,
- the construction of shelters, parks, roads or tracks etc.
- the installation of snow-making hydrants, snow retention fences or other significant hardware.

650.6.7 *Compulsory Report*

The National Ski Association which has proposed the homologation of a course must report to the Sub-Committee for Alpine Courses when any required improvements have been carried out.

650.6.8 *Publication*

The FIS publishes all homologated courses.

650.6.9 *Relationship between Homologation, Snow and Weather as well as Special Conditions*

An organiser should not depend entirely on the homologation of a course by the FIS, but also take note of the prevailing snow and weather conditions e.g. a Downhill course homologated by the FIS may be unsuitable for holding Downhill races when there is insufficient snow depth, unfavourable surface snow conditions, dense fog, heavy snow fall, storm or rain.

655 Competitions under Artificial Light

655.1 Competitions under artificial lights are permitted.

655.2 Lighting must meet the following specifications:

655.2.1 The light level anywhere on the course must not be less than 80 lux, measured parallel to the surface. The lighting should be as uniform as possible.

655.2.2 Floodlights must be placed so that the light does not alter the topography of the course. The light must enable the competitor to discern the terrain and must not alter the depth perception or definition.

655.2.3 The lights should not cast the competitor's shadow into the racing line and should not blind the competitor by glare.

655.3 The TD together with the Jury must check in advance that the lighting conforms to the rules.

655.4 The TD must submit a supplementary report on the quality of the lighting.

660 Gate Judges' Instructions

661 Control of Passage (Explanation)

Fig A Giant Slalom/Super G/Downhill

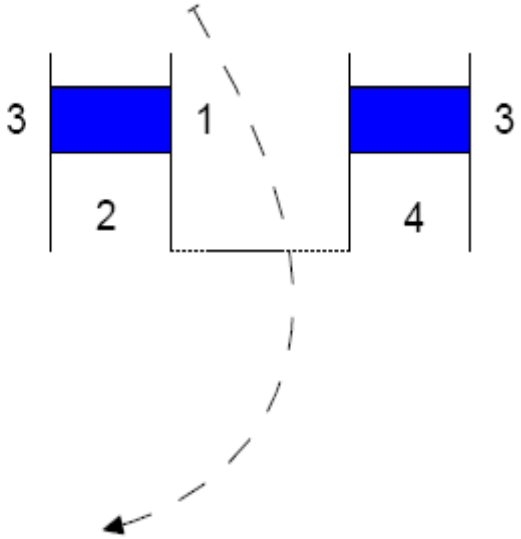

1.Turning Pole

2.Turning Gate

3. Outside Pole

4. Outside Gate

Fig B Parallel

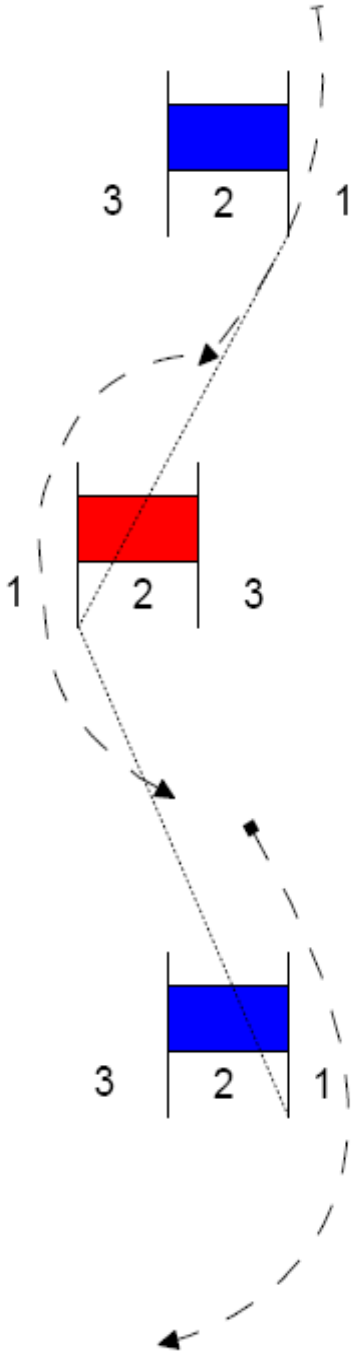

Fig C Slalom

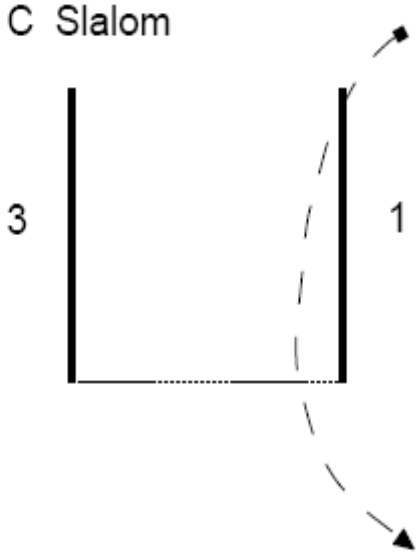

661.1 Every gate judge must receive a check card, along with weatherproof covering where necessary, for each run that will show:
Name of the gate judge,
Number(s) of the gate(s) for which he is responsible and designation of the run (1st or 2nd)

661.2 If a competitor fails to pass through a gate (or a gate marker) correctly according to art. 661.4 the Gate Judge must immediately record the competitor's bib number and the gate number(s) where the fault occurred.

661.2.1 A drawing of the fault committed is essential.

661.3 Should a competitor receive outside help, for instance after a fall, the Gate Judge must record this on his check card. (art. 628.13)

661.4 Correct Passage

661.4.1 A gate has been passed correctly when both the competitor's ski tips and both feet have crossed the gate line. If a competitor loses a ski, without committing a fault, e.g. not by straddling a pole, then the tip of the remaining ski and both feet must have crossed the gate line. This rule also applies when a competitor has to climb back up to a gate. (art. 614.2.3)

661.4.1.1 The gate line in Downhill, Giant Slalom and Super-G, where a gate consists of two pairs of poles holding gate panels between them, is the shortest imaginary line between the turning pole and the outside gate at snow level (art. 661).

661.4.1.2 The gate line in Slalom is the shortest imaginary line between the turning pole and the outside pole

661.4.1.3 If a competitor removes a pole from its vertical position before both the competitor's ski tips and both feet have passed the gate line, the ski tips and feet must still pass the original gate line (marks in the snow). This is also valid in the case of a missing turning pole (or gate).

661.4.2 In Parallel Slalom, the passage is correct when both ski tips and both feet have passed the turning pole in the direction of the turn (art. 661, fig. B).

662 Importance of the Task of the Gate Judge

662.1 Each gate judge should have a thorough knowledge of the competition rules. The gate judge is required to follow instructions from the Jury.

662.2 The decision handed down by the gate judge must be clear and unbiased. The gate judge must declare a fault only when he is convinced that a fault has been committed.

662.3 The gate judge can consult the adjacent gate judge in order to confirm his opinion. He can even demand via a member of the Jury that the race is briefly interrupted, so that he may check the tracks on the course.

662.4 When an adjacent gate judge, a member of the Jury or an official video controller makes a report concerning a competitor which differs from the notes of the gate judge in question, the Jury may freely interpret these notes in view of a possible disqualification of a competitor or of a decision concerning a protest.

663 Giving Information to a Competitor

663.1 A competitor, in the case of an error or a fall, is permitted to ask the gate judge if a fault was committed and the gate judge, if asked, must inform a competitor if he has committed a fault that would lead to disqualification.

663.2 The competitor himself is fully responsible for his action and, he cannot hold the gate judge responsible.

664 Immediate Announcement of Disqualifying Faults

664.1 The Jury may decide that the gate judge will signal a disqualifying fault immediately by raising a flag of a particular colour, by a sound signal, or by other means as provided by the organisers (art. 670 video control).

664.2 The gate judge must record all infringements on his check card regardless of immediate announcements.

664.3 The gate judge is required to give information to Jury members on request.

665 Duties of the Gate Judge on completion of the 1st and 2nd run

665.1 The chief gate judge (or his assistant) is required to collect all the check cards immediately after each run and to pass them on to the Referee in the finish.

666 Duties of the Gate Judge at the Conclusion of the Race

666.1 Each gate judge who has recorded a disqualifying fault or who has been witness to an incident leading to a re-run must be available to the Jury until after the settlement of any protests.

666.2 It is the responsibility of the Technical Delegate to dismiss a gate judge who is waiting to be called by the Jury.

667 Supplemental Duties of the Gate Judge

667.1 The gate judge may be asked to perform other duties after he performs his required function, including the replacement of gate poles, torn or missing panels.

667.2 He should assist in keeping the course clear and remove any markings made on the course by competitors or third parties.

667.3 A competitor who is obstructed during his run must stop immediately and report this to the nearest gate judge. The gate judge must enter the details of the incident on his check card and have the card available for the Jury at the end of the 1st or 2nd run. The competitor may apply to any member of the Jury for a re-run.

668 Location and support of the Gate Judge

668.1 The gate judge must be so placed that he can safely but properly observe the terrain, gates and course sections for which he is responsible, He should be near enough to be able to take prompt action, but distant enough not to hinder the competitor.

668.2 Organisers are obliged to outfit gate judges so that they are readily identifiable. Identification or clothing should be of a colour that will not be confused with a gate panel.

668.3 The gate judge must be in his location well before the start of the run. Organisers should provide gate judges with protective clothing against adverse weather where necessary and should provide some form of nourishment during the run.

668.4 Any equipment necessary to permit the gate judge to perform his assigned duties should be provided.

669 Number of Gate Judges

669.1 The organiser is responsible for having a sufficient number of competent gate judges available.

669.2 The organiser must inform the Jury of the number of gate judges available for training and particularly for the race.

669.3 At Olympic Winter Games, FIS World Ski Championships and FIS World Cup competitions, the number of gate judges will be determined by the Jury.

670 Video control

When the organiser has the equipment for official video control, the Jury will appoint an official video controller. The duties of the video controller are to observe the competitors' passage through the course.

680 Poles

All poles used in alpine events are described as slalom poles and are either rigid poles or flex-poles.

680.1 **Rigid Poles**

Must be round, uniform poles with a diameter between a minimum of 20 mm and a maximum of 32 mm without joints. They must be of such a length that when set, they project about 1.8 m out of the snow and must be made of a non-splintering material (plastic, plasticised bamboo or material with similar properties).

680.2 **Flex poles**

Flex poles are fitted with a spring loaded hinge. They must conform to the FIS specifications.

680.2.1 *Use of Flex-poles*

Flex-poles must be used for all alpine competitions published in the FIS Calendar except Downhill. The use of flex poles may be requested by the Jury for Downhill.

680.2.1.1 *Slalom*

Slalom poles must be coloured red or blue. The turning pole must be a flex-pole.

680.2.1.2 *Giant Slalom and Super-G*

In Giant Slalom and Super-G two pairs of slalom poles are used, each pair carrying a gate panel between them. The gate panels should be fixed or tied so they should tear or break away from one pole. The turning pole(s) must be flex-pole(s).

680.2.2 *FIS Specifications for Flex Poles*

All further details in regard to construction and functioning of the flex poles are regulated in the valid FIS Specifications for flex poles.

690 Gate Panels for Giant Slalom Super-G and Downhill

Gate panels which conform to the FIS Specifications must be used for all Giant Slalom, Super-G and Downhill competitions published in the FIS Calendar. A list of homologated panels is published on the FIS Website. ICR arts. 701.3.2, 901.2.2 and 1001.3.2 remain valid.

690.1 **Release in case of collision**

Gate panels should release from the pole when a competitor gets caught by it. The gate panel must meet the test requirements for this as defined in the specifications for Gate Panel Homologation.

690.2 **No removal during normal collision with the pole**

During normal collisions, the gate panel should not release from the pole. The gate panel must meet the test requirements for this defined in the specifications for Gate Panel Homologation.

690.3 **Wind permeability**

The panel must be made of wind-permeable material.

690.4 Advertising on Panels

Advertising on panels should not reduce wind permeability and the release mechanism of the panels.

695 Colours

For Major Events (art. 201.3.1) and Cups (art. 201.3.2 and 201.3.3) different alternative colours for poles and panels may be used. Orange can be used instead of red at all FIS levels. Poles and panels should be the same colour.

Particular Rules for the different Events

700 Downhill

701 Technical Data

701.1 Vertical Drop

701.1.1 Men's Courses

For Olympic Winter Games, FIS World Ski Championships and FIS World Cups:
- 800 m (in exceptional cases 750 m) – 1100 m

For Continental Cups:
- 500 m – 1100 m

For all other FIS races:
- 450 m - 1100 m (U21-U18, 700 m)

2 Run race
- 350 m – 450 m

701.1.2 Ladies' Courses

For all competitions:
- 450 m - 800 m (U21-U18, 700 m)

2 Run race
- 350 m – 450 m

701.1.3 Entry League Races (ENL) Ladies' and Men:

1 Run Race:
- 400 m - 500 m

2 Run Race:
- 300 m - 400 m

The course must be homologated for Downhill with the start and finish positions for ENL indicated.

701.2 Course Length

The course length has to be measured by a measuring tape, wheel or GPS and printed on the start and the results list.

701.3 Gates

701.3.1 A Downhill gate consists of 4 slalom poles and 2 gate panels.

701.3.1.1 Courses are marked with red or blue gates (see art. 701.3.2).

701.3.1.2 If men and ladies use the same course, the additional gates for ladies must be blue.

701.3.2 For gate panels, rectangular panels are to be used, approximately 0.75 m wide by 0.50 m high. They are to be fastened on the poles, so that they can be recognised as easily as possible by the competitors. In place of red a luminous orange colour may be used. If the safety netting is the same colour as the gate panels (usually red or blue), and where the gates cannot be seen properly against the backdrop of the safety netting, an alternative colour for the gate panels (usually blue or red) may be used on those gates.

701.3.3 The width of the gates must be at least 8 m.

702 The Courses

702.1 Joint Regulations for Downhill Courses

Downhill courses for Olympic Winter Games, FIS World Ski Championships, and the FIS World Cup must be specifically inspected, in order that they not only comply with the technical requirements, but are also technically demanding.

702.2 General Characteristics of the Courses

A Downhill is characterised by the six components of technique, courage, speed, risk, physical condition and judgement. It must be possible to ski the Downhill course from the start to the finish with different speeds. The athlete adapts speed and performance to his ski technical skills and to his individual self-responsible judgement.

702.3 Particular Regulations for the Course Layout

Courses should normally be approx. 30 m wide. The inspector assigned for course homologation decides whether this width is sufficient and if necessary, may order widening. He can also permit a width of less than 30 m depending on the line and terrain requirements, as long as the areas of the course before and after the narrow part permit this. Fall zones should be planned, where necessary, on the outside of curves. Possibilities to control speed should be made specifically for the approach to lips, drop-offs and jumps.

Not all parts of the course need necessarily to be skied at full speed. Surfaces may be left in their natural state.

Obstacles against which competitors may be thrown if leaving the course should be as well protected as possible with high safety nets, safety fences, pads or similar means if necessary, together with slip-sheets.

The function of safety installations must withstand weather conditions typical for alpine skiing.

702.4 Means of Transport

Access to the start must be provided by lifts or shuttle service.

703 Course Setting

703.1 Setting of the Gates

703.1.1 Gates must be set to delineate the desired racing line.

703.1.2 Before difficult jumps and difficult passages the speed should be controlled by appropriate course setting where possible.

703.1.3 At places where the outside gate must be removed, in exceptional cases decided by the Jury, the turning gate serves as a gate. (see art. 904.3)

703.2 Preparation and Inspection of the Course

703.2.1 For all Downhill competitions listed in the FIS Calendar, the race course should be completely prepared and race-ready before the first Jury inspection. It should be available with all of the installations as set out in the technical advisor's or homologation report, or as determined between the organiser and the Technical Delegate (for Olympic Winter Games, FIS World Championships and World Cup Referee or Assistant Referee) prior to the arrival of the teams.

703.2.2 Before the start of the training on the first official training day, there must be an inspection by the Jury with the technical advisor, if present and generally also in the presence of the team captains or trainers.

703.2.3 Before the start of the first official training the competitors should conduct a complete inspection of the course.

703.2.4 The members of the Jury must be available to receive requests and suggestions regarding the course, training etc. from the competitors and trainers.

704 Official Training

Special regulations may be issued for Downhill training for the Olympic Winter Games, FIS World Ski Championships, FIS World Cup and FIS Continental Cup.

704.1 Obligation to Participate

Official training forms an integral part of the competition. Competitors are required to participate in the training. All qualified competitors entered for the competition must have been entered and drawn in all official training runs. This is also valid where substitutes are authorised by special rules.

704.2 Duration

Three days should be scheduled for the inspection and official training.

704.2.1 A reduction in the number of training days or at least one training run may be decided on by the Jury.

704.2.2 Official training need not necessarily be on consecutive days.

704.3 Race-ready Preparation

The entire facilities (start, course, and finish area) must be completely prepared and ready for racing by the first official training day.

704.3.1 All crowd control barriers must be completed.

704.4 First Aid and Medical Service

The first aid and medical services must be completely operational during all training. Details of the Medical Support Requirements are given in chapter 1 of the FIS Medical Guide.

704.5 Priority on the Lift Facilities to the Start

Organisers must arrange for competitors and specifically accredited officials to have assured priority on the lift facilities to the start in order to use the training times without waiting.

704.6 Training Numbers

Competitors must wear training numbers (bibs) for all official training.

704.7 Start Order

The Start Referee, or an official appointed by the Jury, must verify from a start list that the competitors start training in the order of the training start list, and that start intervals are maintained.

704.8 Timed Training

704.8.1 During at least one of the last two training days the times must be taken.

704.8.2 Recorded times must be given to the team captains at latest at the team captains meeting but may also be announced over the loud speaker or published on the scoreboard after each competitor's run.

704.8.3 A competitor must participate in at least one timed training run.

704.8.4 In case of a fall, or stopping, or being overtaken during a training run, the competitor must leave the race line. Continuing the Downhill training run is not permitted. He may, however, move along the edge of the course to the Finish.

704.8.5 In case of atmospheric changes (snowfall etc.) between the last training day and the day of the race, an inspection of the course may be organised for the competitors on the day of the race.

704.8.6 Whenever possible, one training run should take place at the same time as that scheduled for the race.

705 Yellow Flag

705.1 Inspection

The Jury may, define the position of the yellow flags for the training and for the race if required which can be waved to alert the next competitor. The flags must be positioned before the first inspection and should be recognisable by the competitors.

705.2 Training

When a competitor is stopped in training by the yellow flag, he has the right to re-start from the point where he has been stopped.

At the request of the competitor, a Jury member may allow him a re-run if this is possible from the point of view of the organisation and any delay resulting there from. If a re-run is approved it is the responsibility of the competitor to present himself to the start referee before the last competitor has started, otherwise this approval will be withdrawn.

705.3 Race

When a competitor is stopped during the race he has the right to a re-run provided that the Jury considers this possible from an organisational point of view. The Jury should ensure that the competitor's re-run takes place before the last competitor on the start list of the race.

705.4 Obligation

When a competitor is waved down by a yellow flag he must stop immediately.

705.5 Commands

On the command "start stop!" or "start stop, yellow flag" the Start Referee must close the start. He must respond immediately via radio confirming that the start is closed, and state the start number of the last competitor to have started as well of the start number of the competitor held at the start ("start stop confirmed, number 23 on course, number 24 at the start").
The Jury member who called the "start stop" is also responsible for requesting yellow flag(s) that are necessary to stop competitor(s) on course.

706 Execution of the Downhill

706.1 Downhill in One Run

A Downhill will be carried out in one run.

706.2 Downhill in Two Runs

706.2.1 A Downhill in two runs can be organised with the required vertical drop as stated in the ICR.

706.2.2 The result will be determined by the addition of the two run times. The rule "Starting order for the 2nd run" (art. 621.11) will be used.

706.2.3 All the rules for the Downhill are valid for the race in two runs. The Jury will rule in case of problems caused by the course, the training and the two runs.

706.2.4 The two runs should be run on the same day.

706.2.5 Downhill races carried out in two runs must be identified as such in the FIS Calendar, provided the race course has a vertical drop according to art. 701.1 of the ICR.

706.2.6 In exceptional cases where carrying out the original Downhill is jeopardized (unfavourable snow or atmospheric conditions), the Jury is permitted to conduct the Downhill in two runs.

707 Crash Helmet

All competitors and forerunners must wear a crash helmet for official training as well as for the race that meets the FIS Equipment Specifications.
Soft ear protection is only permitted for helmets used in Slalom.

800 Slalom

801 Technical Data

801.1 Vertical Drop

801.1.1 Men's Courses

For Olympic Winter Games, FIS World Ski Championships and FIS World Cup:
- 180 - 220 m

For all other races of the FIS:
- 140 - 220 m

801.1.2 Ladies' Courses

For Olympic Winter Games, FIS World Ski Championships and FIS World Cup:
- 140 - 220 m

For all other FIS races:
- 120 - 200 m

801.1.3 U16 - U14 Courses
- 100 - 160 m

801.1.4 Entry League Races (ENL) Ladies and Men
- 80 m - 120 m (Men 140)

Races in 3 runs:
- minimum 50 m

801.2 Gates

801.2.1 A slalom gate consists of two poles (art. 680) or where there is no outside pole the gate will consist of a turning pole.

801.2.2 Consecutive gates must alternate in blue and red.

801.2.3 A gate must have a minimum width of 4 m and a maximum of 6 m.
The distance from turning pole to turning pole of successive gates must not be less than 6 m and not more than 13 m (valid for all categories). Exception U16 - U14 competitions:
- between 7 m and 11 m

The distance between gates within combinations (hairpin or vertical) must be not less than 0.75 m and not more than 1 m. The gates in hairpin or vertical combinations must be set in a straight line. Delayed gates must have a minimum distance of 12 m and a maximum distance of 18 m (U16 - U14 Competition 15 m) from turning pole to turning pole.

801.2.4 *Number of Direction Changes: (number of direction changes by rounding up or down of the decimals) for all FIS events:*

- 30% to 35% of the vertical drop, +/- 3 direction changes

Exception for U16 - U14 competitions:

32% to 38% +/- 3 direction changes

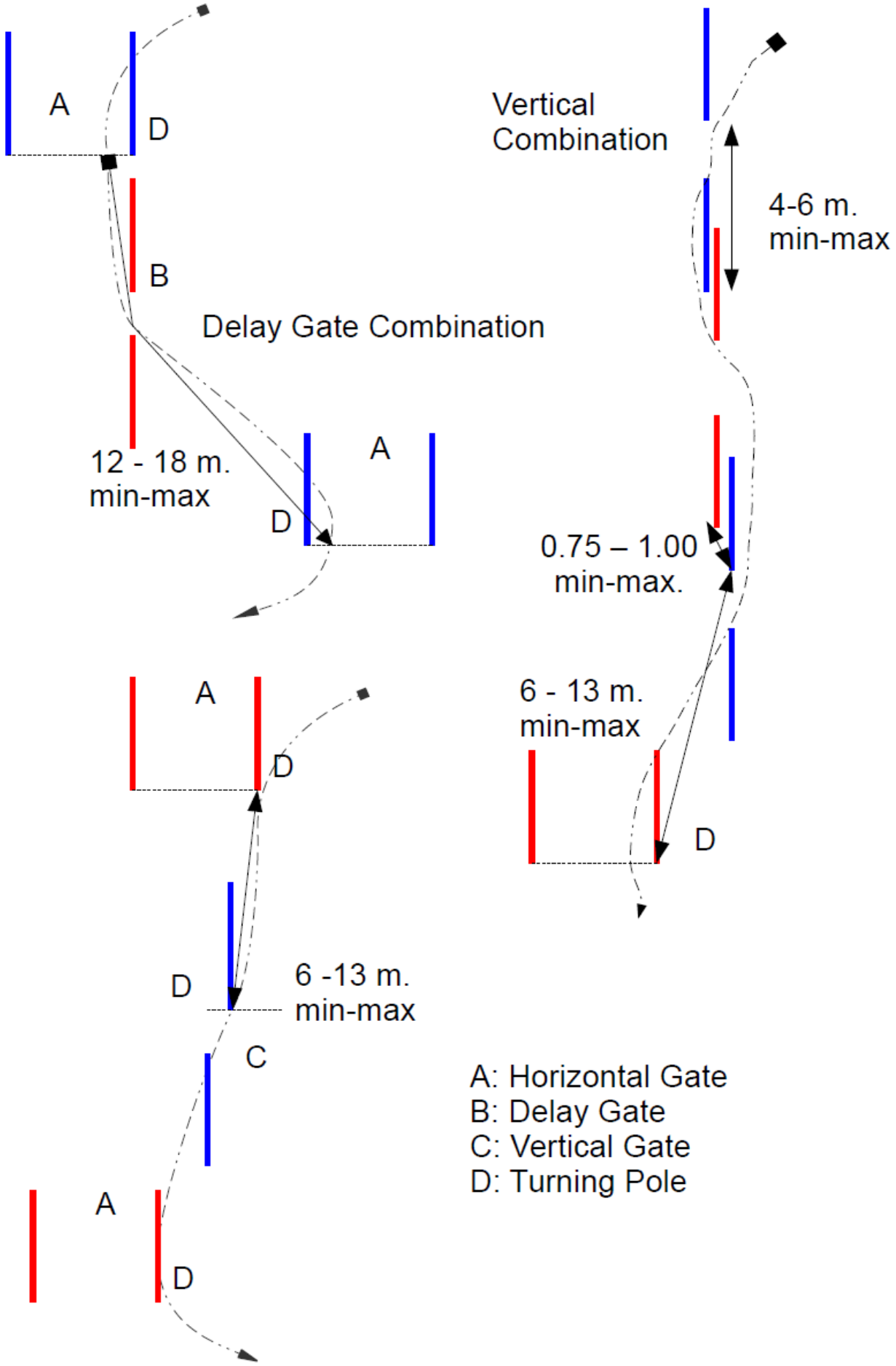
A
D
B
Delay Gate Combination
12 - 18 m.
min-max
A
D
Vertical
Combination
4-6 m.
min-max
0.75 – 1.00
min-max.
6 - 13 m.
min-max
D
A
D
D
6 -13 m.
min-max
C
A
D
A: Horizontal Gate
B: Delay Gate
C: Vertical Gate
D: Turning Pole

802 The Courses

802.1 General Characteristics of the Course

802.1.1 At Olympic Winter Games and FIS World Ski Championships the course must be set on slopes with a gradient of approximately 33% to 45%. It may even be below approximately 33%, but may exceed approximately 52% only in very short parts of the course.

802.1.2 The ideal slalom course, taking into consideration the drop and the gradient specified above, must include a series of turns designed to allow the competitors to combine speed with neat execution and precision of turns.

802.1.3 The Slalom should permit the rapid completion of all turns. The course should not require acrobatics incompatible with normal ski technique. It should be a technically clever composition of figures suited to the terrain, linked by single and multiple gates, allowing a fluent run, but testing the widest variety of ski technique, including changes of direction with very different radii. Gates should never be set only down the fall-line, but so that some full turns are required, interspersed with traverses.

802.1.4 Preparation of the Course

Slalom competitions must be raced on a course surface that is as hard as possible. If snow falls during the race, the chief of course must ensure that it is packed or, if possible, removed from the course.

802.2 Width

The course should be approximately 40 m wide, if two runs are set on the same slope.

803 Course Setting

803.1 Course Setters

803.1.1 Pre-inspection

This inspection must be carried out by the course setter before he sets the course. The Slalom should correspond to the average ability of the first 30 competitors.

803.2 Number of Gate Combinations

A Slalom must contain horizontal (open) and vertical (closed) gates as well as a minimum of one and a maximum of three vertical combinations consisting of three to four gates and at least three hairpin-combinations consisting of two gates. It must also contain a minimum of one and a maximum of three delay gate combinations.

803.2.1 U14 – U16

- U14: minimum 2 and maximum 4 hairpin combinations and minimum 1 and maximum 2 vertical combination consisting of maximum 3 gates.

- U16: minimum 3 and maximum 6 hairpin combinations and minimum 1 and maximum 3 vertical combinations consisting of 3 - maximum 4 gates.
- It must also contain a minimum of one and a maximum of three delayed turns

The course should have no special technical difficulties.
Flex-poles must be light poles (25 - 28.9 mm).

803.3 Gates and Combinations of Gates

The most important types of gates and combinations of gates are: horizontal (open) gates, vertical (closed) gates, vertical combinations, and hairpin combinations and delayed gates combinations.

803.4 Setting

In setting Slalom the following principles should be observed:

803.4.1 Avoidance of monotonous series of standardised combinations of gates.

803.4.2 Gates, which impose too sudden sharp braking on competitors, should be avoided, as they spoil the fluency of the run without increasing the difficulties a modern Slalom should have.

803.4.3 It is advisable before difficult combinations of gates to set at least one gate which allows the competitor to ski through the difficult combination under control.

803.4.4 It is not advisable to set difficult gate passages either right at the beginning or end of the course. The last gates should be rather fast, so that the competitor passes the finish at a good speed.

803.4.5 Where possible the last gate should not be too close to the finish. It should direct competitors towards the middle part of the finish. If the width of the slope necessitates it, the last gate can be common to both courses, provided the prescribed alternation of blue and red gates is maintained.

803.4.6 The slalom poles should be fixed (screwed in) by the chief of course or his assistants immediately after they have been set, so that the course setter can supervise the operation.

803.5 Checking the Slalom Course

The Jury must check that the course is ready for racing once the course setter has set it, paying special attention that:

- The slalom poles are firmly fixed (screwed in).
- The gates are in the right colour order.
- If necessary the position of the poles is marked.
- The numbers are in the right order on the outside poles.
- The poles are high enough above the snow.
- The two slalom courses are far enough from each other to avoid misleading the competitors.
- The reserve poles are correctly placed not to mislead the competitors.
- Start and finish are in accordance with art. 613 and 615.

804 Single Pole Slalom

All rules of the ICR are valid, except as follows:

804.1 Single Pole Slalom is permitted in all International FIS Competitions.

804.2 A Single Pole Slalom has no outside pole except the first and the last gate, a delayed gate and combinations (hairpin, vertical).

804.3 Where there is no outside pole, both feet and ski tips must have passed the turning pole on the same side, following the normal race line of the slalom crossing the imaginary line from turning pole to turning pole. If a competitor loses a ski, without committing a fault, e.g. not by straddling a pole, then the tip of the remaining ski and both feet must meet both requirements. If the competitor has not correctly crossed the imaginary line from turning pole to turning pole and does not follow the normal race line, then he has to climb back up and pass around the missed turning pole. Where there is an outside pole (first and last gate, delayed gate, and combinations (hairpin, vertical) art. 661.4.1. is valid.

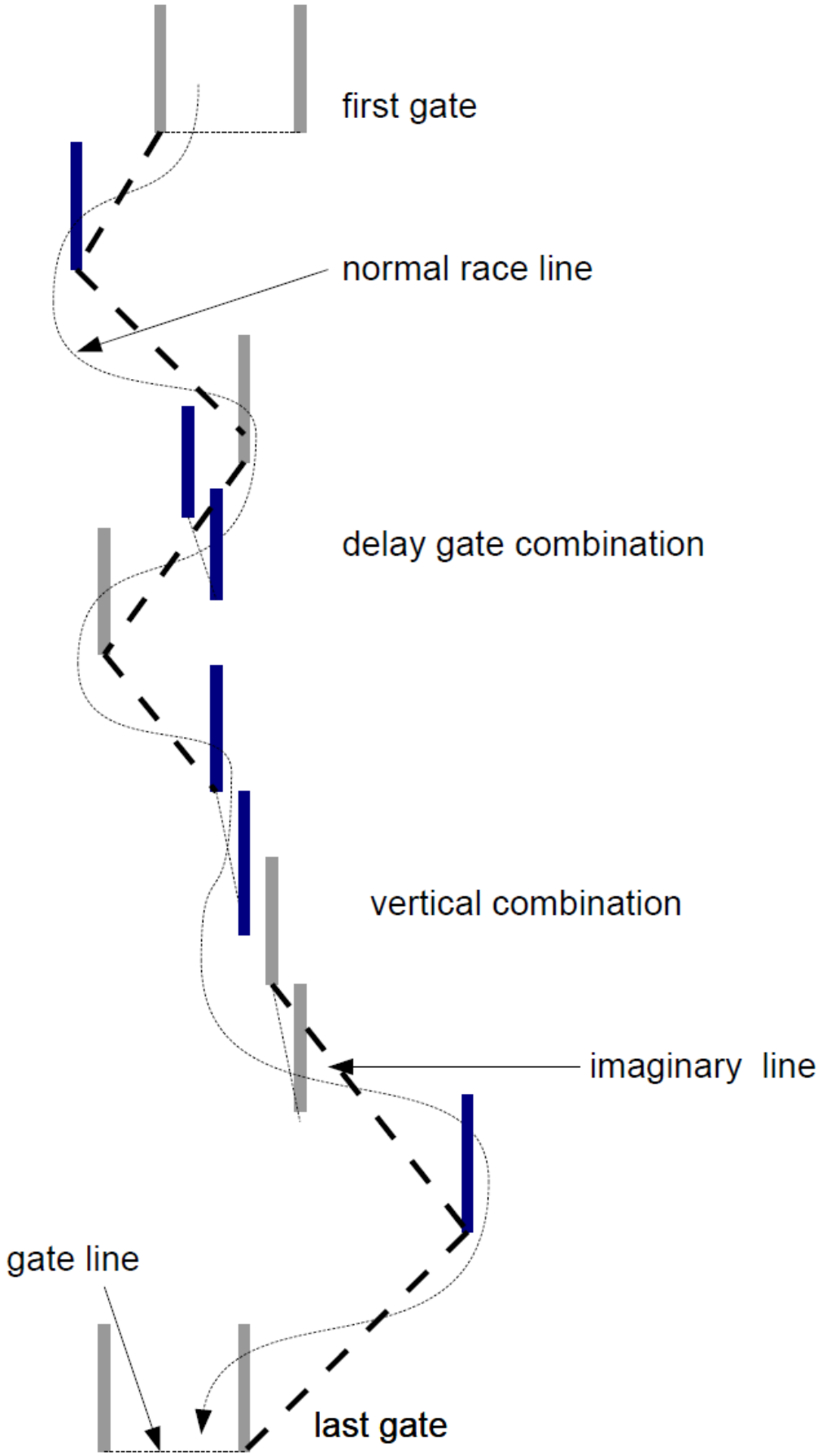
first gate
normal race line
delay gate combination
vertical combination
imaginary line
gate line
last gate

805 The Start

805.1 Start Intervals

The start takes place at irregular intervals in Slalom. The chief of timing and calculations or his assistant tells the starter when each competitor should start, in agreement with the Jury. The competitor on the course need not have passed the finish line before the next competitor starts.

805.2 Starting Order

805.2.1 In the first run in sequence of the start numbers.

805.2.2 For the second run see art. 621.11

805.3 Start Signal

As soon as the starter has received the order for the next start, he gives the competitor the warning "Ready", "Attention", "Achtung" and a few seconds later the start signal "Go! Partez! Los!". The competitor must start within about 10 seconds after this order.

805.3.1 A competitor must appear, at latest one minute, after being called by the official. Early start times caused by the non-arrival of preceding competitors have to be taken into account. The start referee may however, permit a delay which in his opinion is due to "force majeure". In doubtful cases he may allow the competitor a provisional start, inserted in the normal starting order. The start referee will make the necessary decisions.

805.4 Valid Start and False Start

Each competitor must start according to the art. 805.3, otherwise he will be disqualified.

806 Execution of the Slalom

806.1 Two runs

A Slalom must always be decided by two runs on two different courses.
Both courses must be used one after the other in the order decided by the Jury. Division of the competitors into two groups starting simultaneously on both courses is not permitted. Whenever possible, both runs should be held on the same day.

806.2 Limitations in the Second Run

The Jury has the right to reduce the number of competitors for the second run to half on the first run start list. The decision has to be made no later than one hour before the start of the first run.

806.3 Video and Film Control

At Olympic Winter Games, FIS World Ski Championships, FIS World Cup and FIS European Cup the Organising Committee must arrange for recordings on video, so that the whole Slalom can be recorded.
At the other FIS Calendar races, a video or film control is recommended.

807 Crash Helmet

All competitors and forerunners must wear a crash helmet for official training as well as for the race that meets the FIS Equipment Specifications.
Soft ear protection is only permitted for helmets used in Slalom.

900 Giant Slalom

901 Technical Data

901.1 Vertical Drop

901.1.1 *Men's Courses*
- 250 m - 450 m

901.1.2 *Ladies' Courses*
- 250 m - 400 m

901.1.3 For Olympic Winter Games, FIS World Ski Championships and FIS World Cup the minimum vertical drop is 300 m (Ladies and Men).

901.1.4 *U16 - U14 Courses*
- 200 m - 350 m

Giant Slalom for U16 must consist of two runs, and for U14 this possibility should be granted.

901.1.5 *Entry League Races (ENL) Ladies and Men*
- 200 m - 250 m

901.2 The Gates

901.2.1 A giant slalom gate consists of 4 slalom poles (art. 680.2.1.2) and 2 gate panels.

901.2.2 The gates must be alternately red and blue. The gate panels are to be approx. 75 cm wide and approx. 50 cm high. They are fastened between the poles so that the lower edge of the panel is approx. 1 m above the snow and should be capable of tearing or breaking away from the pole (see also art. 690).

901.2.3 The gates must be at least 4 m and at most 8 m wide. The distance between the nearest poles of two successive gates must not be less than 10 m. In U16 - U14 competition the distance between turning pole and turning pole must be not more than 27 m.

901.2.4 *The Giant Slalom has to be set as follows (number of direction changes by rounding up or down of the decimals):*
- 11 - 15% of the vertical drop in meters
- U16 - U14: 13% - 18% of the vertical drop
- Entry League (ENL): 13 - 15% of the vertical drop

902 The Courses

902.1 General Characteristics of the Courses

The terrain should preferably be undulating and hilly. The course should normally have a width of approximately 40 m.
The inspector authorised to homologate the course decides whether this width is adequate and if necessary can order it to be widened. He can also permit a width of less than approximately 40 m depending on the line and terrain requirements, as long as the areas of the course before and after the narrow part enable this.

902.2 Preparation of the Course

The course must be prepared as for the Downhill race. The parts of the course where gates are set and where competitors have to turn must be prepared as for a Slalom.

903 Course Setting

903.1 Setting

In setting a Giant Slalom the following principles should be observed:

903.1.1 The first run should be set the day before the race. Both runs can be set on the same course but the second run must be re-set.

903.1.2 The skilful use of the ground when setting a Giant Slalom is, in most cases, even more important than for a Slalom, since combinations play a less important role owing to the prescribed width of the gates and the greater distances between them. It is therefore better to set mainly single gates, while exploiting the ground to the utmost. Combinations can be set, but mainly on uninteresting terrain.

903.1.3 A Giant Slalom consists of a variety of long, medium and short turns. The competitor should be free to choose his own line between the gates. The full width of a hill should be used wherever possible. At places where the outside gate must be removed in exceptional cases decided by the Jury the turning gate serves as a gate.

903.1.4 The course setter in setting the course for youth should take particular consideration of the physical ability of the competitors.

904 Single Gate Giant Slalom

All rules of the ICR are valid, except as follows:

904.1 Single Gate Giant Slalom is permitted only in International FIS level Competitions (see art. 201.3.4, 201.3.5 and 201.3.6).

904.2 A Single Gate Giant Slalom has no outside gate, except for the first and the last gate and delayed gates.

904.3 Where there is no outside gate, both feet and ski tips must have passed the turning pole of the turning gate on the same side, following the normal

race line of the Giant Slalom crossing the imaginary line from turning pole to turning pole. If a competitor loses a ski, without committing a fault, e.g. not by straddling a pole, then the tip of the remaining ski and both feet must meet both requirements. Where there is an outside gate (first and last gate, delayed gate) art. 661.4.1. is valid.

904.4 All rules and regulations dealing with the width of the course should be considered, as if there is an imaginary outside gate.

905 The Start

905.1 In the first run according to the start numbers (art. 621.3 and 622).

905.2 Starting order for the second run see art. 621.11

906 Execution of the Giant Slalom

906.1 A Giant Slalom must always be decided by two runs (ladies and men). The second run may be held on the same course, but the gates must be reset. Whenever possible, both runs should be held on the same day.

906.2 Limitations in the Second Run

The Jury has the right to reduce the number of competitors for the second run to half on the first run start list. The decision has to be made no later than one hour before the start of the first run.

906.3 Video Control

Art. 806.3 is applied, if possible, also for Giant Slalom.

907 Crash Helmet

All competitors and forerunners must wear a crash helmet for official training as well as for the race that meets the FIS Equipment Specifications.
Soft ear protection is only permitted for helmets used in Slalom.

1000 Super-G

1001 Technical Data

1001.1 Vertical Drop

1001.1.1 Men's Courses

For Olympic Winter Games, FIS World Ski Championships, FIS World Cups and Continental Cups:
- 400 m - 650 m

For all other FIS competitions:
- 350m – 650m

1001.1.2 *Ladies' Courses*

For Olympic Winter Games, FIS World Ski Championships and FIS World Cups:

- 400 m - 600 m

For all other FIS competitions:

- 350 m - 600 m

1001.1.3 *U16 - U14 Courses*

- 250 m - 450 m

1001.1.4 *Entry League Races (ENL)*

- 350 m - 500 m

1001.2 Length of the Course

The length of the course must be measured with either a measuring tape, a wheel or GPS and has to be published on the start list and the results.

1001.3 Gates

1001.3.1 A Super-G gate consists of four slalom poles (art. 680.2.1.2) and two gate panels.

1001.3.2 The gates must be alternately red and blue. The gate panels are to be approx. 75 cm wide and approx. 50 cm high. They are fastened between the poles so that the lower edge of the panel is approx. 1 m above the snow and should be capable of tearing or breaking away (art. 690).

1001.3.3 The gates must be at least 6 m and at most 8 m wide for open gates and at least 8 m and at most 12 m for vertical gates.

1001.3.4 *The Super-G must be set as follows: (number of direction changes by rounding up or down of the decimals)*

For FIS level events 7% of the vertical drop equals the minimum number of direction changes. For Olympic Winter Games, FIS World Ski Championships, FIS World Junior Championships and Continental Cup level events 6% of the vertical drop equals the minimum number of direction changes.

The distance between the turning poles of two successive gates must be at least 25 m (exception: art. 1003.1.1).

U16 - U14 competitions: minimum 8%, maximum 12% direction changes of the vertical drop.

Entry League (ENL): minimum 7% of the vertical drop

1002 The Courses

1002.1 General Characteristics of the Courses

The terrain should be undulating and hilly if possible. The course should normally have a width of approximately 30 m.

The inspector authorised to homologate the course decides whether this width is adequate and if necessary can order it to be widened. He can also permit a width of less than approximately 30 m depending on the line

and terrain requirements, as long as the areas of the course before and after the narrow part enable this.

1002.2 Preparation of the Course

The course must be prepared like a Downhill course. The course sections on which there are gates and where the competitors alter their directions must be prepared like in Slalom.

1002.3 Free-skiing on the Competition Hill

Competitors should be given the opportunity to free ski on the closed competition hill before the course is set if possible.

1002.4 Homologation of Youth Super-G courses

All courses used for U16 - U14 Super-G must be homologated. If the course to be used is homologated for FIS Giant Slalom, then a safety inspection by a FIS Technical Advisor is required**.**

1003 Course Setting

1003.1 Setting

In setting a Super-G the following principles should be observed:

1003.1.1 It is recommended to set the gates to make the best use of the terrain; Gate combinations according to art. 803.3 are allowed only in small numbers. The distance between the successive turning poles can in this case be less than 25 m, but must be at least 15 m.

1003.1.2 A Super-G should contain a variety of long and medium turns. The competitor should be absolutely free to choose his own line between the gates. It is not permitted to set only down the fall-line of the slope.

1003.1.2.1 At places where outside gate must be removed, in exceptional cases decided by the Jury the turning gate serves as a gate.

1003.1.3 Where the terrain allows it jumps may be set.

1003.1.4 U16 - U14 Super-G should be carried out in a form of varied run. The basic form should consist of jumps and gliding elements. The choice of course and course setting has to follow the speed and the U16 - U14 level of skill. They should learn controlled speed and gliding.

1003.1.5 Course Setting for U14

Different courses must be adapted for U14 and U16, which should have turning radiuses corresponding to their age. The ski to be used is the appropriate Giant Slalom skis for U14 events.

1005 Start

Starting order and start intervals according to art. 621.3 and 622.

1006 Execution of the Super-G

A Super-G will be carried out in one run.

1007 Crash Helmet

All competitors and forerunners must wear a crash helmet for official training as well as for the race that meets the FIS Equipment Specifications.
Soft ear protection is only permitted for helmets used in Slalom.

1008 Yellow Flag

Art. 705 also applies.

1100 Combined

1100.1 Common Rules

Based on art. 201.6.2 and art. 201.6.9 Alpine Combined competitions may be held according to the technical regulations of the events and special regulations approved by FIS.

1100.2 Combined competitions may be held at all levels. When special rules apply (for example, Olympic Winter Games, FIS World Ski Championships, Continental Cups), these rules are considered an integral part of the ICR.

1100.3 The following possibilities of Combined events are possible:

- Alpine Combined
- Classical Combined
- Special forms of Combined events

1100.4 Combined competitions may be held as Single or Team events.

1100.5 Starting numbers given to the competitors for the first run remain the same for all runs.

1100.6 The results of a Combined competition are only counted if the competitor takes part in each event of the Combined and appears in the intermediate results.

1100.7 The Combined results are calculated by adding the race times of the single events or runs. Special forms of Combined events (art. 1103) can be calculated according to other regulations.

1100.8 The Organising Committee must state in the invitation how many competitors are qualified for the second and any subsequent runs. The Jury may change this number.

1100.9 The start order is determined for each event according to art. 621. For special forms of Combined events see art. 1103.2.

1100.10 Only interim results may be published for those events or runs already completed. The official results are only published when all events or runs have been completed.

1100.11 The sequence of the different races to be combined may be decided by the Organisers and must be announced in the race notice and the programme. Changes may be made by the Jury.

1101 Alpine Combined

1101.1 Is the result of a Downhill or Super-G run (speed event) and a single Slalom run held according to the technical regulations for Slalom and those for Downhill or Super-G. The Alpine Combined event consists of two runs.

1101.2 Downhill and Super-G events of Alpine Combined must be held on courses specifically homologated for Downhill or Super-G respectively. The Slalom may be held on these courses.

1101.3 If possible both runs should be held on one day (exceptions can only be decided by the Jury).

1102 Classical Combined

1102.1 Is the result of a Downhill and a Slalom. Each event is to be considered separately.

1102.2 If the Slalom is held as the second event, those competitors marked with K or ZK start last in the second run, if they are not qualified within the top 30 competitors.

1103 Special forms of Combined events

1103.1 Combined competitions which consist of three (Triple) or four (Quadruple) events held according to art. 700 to 1000 are also permitted.

1103.2 FIS may authorize Combined competitions which consist of one or several events according to ICR art. 700 to 1000 and other FIS Disciplines or other types of sport (e.g. alpine skiing combined with a Nordic event or swimming or sailing event, etc.). FIS approval is necessary for such Combined events. Participation and general regulations must be in accordance with the Regulations of the ICR.

1210 General Team Competitions

1210.1 The staging of team competitions is permitted.

1210.2 In absence of any agreement to the contrary, a team consists of five competitors of which the three best times count for the result.

1210.3 The competitors of the individual teams must be named before the draw.

1210.4 FIS points will be awarded only if the individual events are conducted according to the rules of the ICR.

1210.5 The placing of the teams will be determined by addition of the race points of the three best competitors of each team. In case of a tie, the placing is determined by the result of the best individual competitors.

1210.6 For combined placing, the team score for each event is calculated according to art. 1100.7. In case of a tie, the best team is determined by

the team placing in the order of Downhill, Super-G, Giant Slalom, and Slalom.

1211 Combined Team Event

The Event consists of two runs (Super-G & Slalom) and four series in each run.

1211.1 Participation

All Teams with at least 4 competitors (2 Men and 2 Ladies) that are qualified to participate in respective events (Super-G and Slalom) are authorized to enter.

1211.1.2 Participants per Team

Per Team and run a maximum of 2 Ladies and 2 Men must start. The total team size is limited to a maximum of 6 competitors.

1211.2 Competition courses

Ladies and Men ski on the same course.

1211.3 Enrolment

The Teams are enrolled in the reverse order of total FIS points. Ladies will receive bibs from 1 to 4 and Men from 5 to 8, ordered alphabetically.

1211.4 Ranking

The sum of rank positions of the competitors per Team from each of the series (1 competitor per team is a series) of both runs establishes the Winner of the Team Event.
In case of a tie of the total sum of rank positions, the number of best rank positions from individual series (1L, 2M, 3L, 4M, 5L, 6M, 7L and 8M) is considered. Should there still be a tie; the total sum of the times of all Series will count.

1211.5 Announcement of the competitors at the start

For the Series 1 Ladies, 5 minutes before begin of the series.
For all other Series after the end of the preceding Series until 1 minute before begin of the next Series.
In case of non announcement within the times fixed by the Jury, the competitor is not allowed to start = DNS.

1211.6 Start limitation

One and the same competitor must only start once per run at the FIS Combined Team Event.

1212 Alpine Team Event

1212.1 Type of Event

An Alpine Team event will be conducted as a parallel event using Giant Slalom gates and panels.

1212.2 Team Size

The total team size per Nation is limited to a maximum of 6 competitors; at least 2 competitors from one gender. A competitor can only start a run once.

1212.3 Team Entry

The entries for the Alpine Team Event (without names) must be within 24 hours before the scheduled start of the team event.

1212.4 Team Ranking

The teams will be ranked in accordance the sum of each entered competitors FIS points, from lowest total points to highest.

1212.5 Seeding of the Teams

The entered teams will be seeded into heats (4, 8 or 16) based upon their ranking. A bracket list will be arranged as follows (Example for 8 Heats):
Heat 1: Nation ranked 1 vs Nation ranked 16(last)
Heat 2: Nation ranked 8 vs Nation ranked 9
Heat 3: Nation ranked 5 vs Nation ranked 12
Heat 4; Nation ranked 4 vs Nation ranked 13
Heat 5: Nation ranked 3 vs Nation ranked 14 (3rd last)
Heat 6: Nation ranked 6 vs Nation ranked 11
Heat 7: Nation ranked 7 vs Nation ranked 10
Heat 8: Nation ranked 2 vs Nation ranked 15 (2nd last)
The best nation, according to the team ranking, will receive bib number 1 and the last nation will receive the last bib number.
Ladies will receive bibs starting from 1 and then Men, starting from 5, in alphabetical order. If a heat is incomplete the remaining nation will automatically qualify for the next round (a bye).

1212.6 Running the Competition

Each individual leg between two opponents consists of one run.
The start order will be as follow (as an example for Heat 1):
“Course Red” Nation 1 L1 against “Course Blue” Nation last L1
“Course Red” Nation 1 M1 against “Course Blue” Nation last M1
“Course Blue” Nation 1 L2 against “Course Red” Nation last L2
“Course Blue” Nation 1 M2 against “Course Red” Nation last M2
The blue course will be located on the skier’s right

1212.7 Points Scoring

The winner of each individual leg scores 1 point for his Nation. In case of a tie of an individual leg, both nations are awarded1 point.
If there is a tie at the end of the heat (2:2) the Nation with the lowest combined time of the best individual lady and the best individual man run time (or second best in case of a tie for the best time) will win the heat.
If both competitors fall in any leg, the first competitor to reach the finish successfully will be the winner. If both competitors fail to finish, the competitor who successfully skied the furthest distance will be the leg winner.

1212.8 **Reasons for Disqualifications (immediate and without protest)**

- Changing from one course to another
- Interfering with the opponent, voluntary or not.
- Not passing through a gate correctly (art. 661.4.2)

1212.9 **Awards**

The OC can present awards to the competing teams and can award special prizes for individual competitors, such as fastest lady or man or persons winning most points.

1212.10 **Cup points**

Cup points can be distributed based upon the decision of the appropriate Cup sub-committee.

1213 Special Cup Rules

Special, limited events may be run, such as World Cup City Events in accordance with Rules specifically established for such events by the appropriate FIS Committee.

1220 Parallel Events

1221 Definition

The parallel race is a competition where two or more competitors race simultaneously side by side down two or more courses. The setting of the courses, the configuration of the ground and the preparation of the snow are to be as identical as possible.

1222 Vertical Drop

The vertical drop of the course should be between 80 and 100 m. There should be between 20 and 30 gates, not counting the start and finish. The run time of each race should be between 20 and 25 seconds.

1223 Choice and Preparation of the Course

1223.1 Choose a slope wide enough to permit two or more courses, preferably slightly concave (permitting a view of the whole course from any point). The terrain variations must be the same across the surface of the slope. The course layouts must have the same profile and the same difficulties.

1223.2 Over the full width of the chosen slope, the snow must be consistently hard, similar to course preparation for Slalom, so that it is possible to offer equal race conditions on both courses.

1223.3 The Organiser must provide transport for the athletes back to the start in the shortest time possible.

1223.4 The course must be entirely closed off by barriers. It is recommended to fence off reserved places intended for trainers, competitors and servicemen.

1224 The Courses

1224.1 Each course is designated by a series of gates, each gate is composed of two slalom poles with a Giant Slalom gate panel stretched between them and fastened in such a way so as to tear or break away (see also art. 690).

1224.2 In the case of only two courses, poles and panels are red for the course on the left and blue for the other course on skier´s right. If there are more than two courses, the organiser must use different colours for the other courses such as green or orange. The bottom of the panel must be approx. 1 m above the snow.

1224.3 The same course setter establishes the courses and makes sure they are identical and parallel. He must ensure that the course flow is smooth and that there is variety in the curves (very pronounced curves) and that the course causes rhythm changes. In no case should this event resemble a long straight run from top to bottom.

1224.4. The first gate in each course should be placed no less than 8 m from the start and no more than 10 m.

1224.5 Shortly before the finish line, after the last gate, the separation between the two courses must be well marked so that they direct each competitor towards the middle part of the respective finish.

1225 Distance between the Two Courses

The distance between two corresponding gates (from turning pole to turning pole) should be no less than 6 m. The distance between the starting gates should be the same as between the two courses.

1226 Start

1226.1 Start Device

Two gates approved by the FIS shall be used. The gates must be capable of simultaneous and/or delayed opening and connected to the timing devices.

1226.2 The Jury and the starter together will control the start. The start signal can only be given after the Jury has given the competitors permission to start.
Any starting system can be employed provided that the system guarantees a simultaneous start and meets art. 1226.1.

1226.3 False Starts

Penalties will occur:

1226.3.1 if the competitor goes through the gate before the start command,

1226.3.2 if the competitor does not have both ski poles set behind the closed gate.

1226.4 Start Command

Before the starter gives the command of either "Ready - Set" or "Attention - Prêt" or "Achtung - Bereit" and the starting signal which opens the start gates, he must first ensure that the competitors are ready.

1226.5 If one or both start gates fail to open the start must be repeated.

1227 Finish

1227.1 The finish areas must be symmetrical. The line into the finish must be parallel with the line of the start posts.

1227.2 Each finish line is marked by two poles connected by a banner which form the finish. Each of these must be at least 7 m wide. The inside poles of the areas are placed side by side.

1227.3 It is necessary to set up visually separate finish approaches and to keep the courses separated after the finish line.

1228 Jury and Course Setter

1228.1 The Jury is set up as follows:

- the Technical Delegate
- the Referee
- the Chief of Race

1228.2 The course setter is designated by the Jury of the competition (if he is not chosen by the FIS). Before setting the parallel course, he must conduct an inspection and study of the course in the presence of the Jury and those responsible for the course.

1229 Timing

As in Parallel Events two competitors race side by side; it is possible to measure either the difference in time (at Finish) or the individual run times (Start to Finish). If run times are measured, the difference in time has to be calculated from the run times (in 1/100th seconds). The Jury has to announce at the applicable Team Captains Meeting, which timing method will be used. For some special events (NTE) running times may be used to determine rankings (break ties or the award of prizes).

1230 Execution of a Parallel on Two Courses

Each heat between two competitors consists of two runs, the two competitors change courses for the second run.

1230.1 Number of Competitors

The finals of a competition should not include more than 32 competitors. These 32 competitors may either be entered directly or be the first 32 finishers from qualification competitions.

1230.2 Formation into Heats

1230.2.1 Sixteen heats of competitors are formed, either after the finish of the selected previous race or according to their general classification in the FIS World Cup or FIS Continental Cup at the time, or according to their value (FIS points), in the following manner:
Group together:

the 1st and the 32nd	the 9th and the 24th
the 2nd and the 31st	the 10th and the 23rd
the 3rd and the 30th	the 11th and the 22nd
the 4th and the 29th	the 12th and the 21st
the 5th and the 28th	the 13th and the 20th
the 6th and the 27th	the 14th and the 19th
the 7th and the 26th	the 15th and the 18th
the 8th and the 25th	the 16th and the 17th

(see table)

1230.2.2 The competitors receive the numbers from 1 to 32 as classified and they keep them until the end of the races.

1230.2.3 Start order: following the order of the appended table, from top to bottom. All heats race in succession their first run and then their second.
The lower starting number goes down the red course first, the higher number the blue course. For the second run it is reversed. This same system is used for all rounds including the finals.

1230.2.4 The competitors may inspect the course once from top to bottom with skis on. Inspection time 10 minutes.

1230.2.5 Sixteen winners remain as a result of the first elimination. In other words, those who, in their group, have obtained the lower total for the two runs or possibly two times zero.

1230.2.6 Competitors having a bye should be permitted one training run on only one of the two courses before the beginning of the race.

1230.3 Round of sixteen

1230.3.1 The sixteen qualified competitors start according to the start system in pairs from top to bottom.

1230.3.2 There are eight that qualify for the quarter-finals.

1230.3.3 The losing eight competitors receive the same rank (9th).

1230.4 Quarter-finals

1230.4.1 The eight qualified competitors start according to the start table.

1230.4.2 The losing four competitors receive the same rank. (5th).

1230.5 Semi-finals and Final

1230.5.1 The four qualified competitors start according to the start table.

1230.5.2 The losers of the semi-finals race their first run for the 3rd and 4th positions before the finalists race their first run, then the semi-finalists their second run and then the finalists their final race.

1231 Control of the Runs

The gate judges are situated on both exterior sides of the courses. Each gate judge is supplied with a flag which corresponds to the colour of the course he is controlling (either blue or red). This flag is to be used immediately to notify the Jury of a disqualification in his section of the course.
A Jury member located half way down the course, judges whether a gate judge's raising the red or blue flag was justified or not and confirms the disqualification of the competitor.

1232 Disqualifications / Did Not Finish

1232.1 Causes for disqualifications are the following:

- false start (art. 1226.3)
- changing from one course to another
- interfering with an opponent, voluntarily or not
- Not passing through a gate correctly (art. 661.4.2)
- stepping back is not allowed (art. 614.2.3)

1232.2 The competitor who is disqualified in, or who does not finish the first run of a heat will start the second run with a penalty time.

1232.3 The competitor who is disqualified in, or does not finish the second run of a heat is eliminated.

1232.4 If both competitors do not finish the second run, the result of the first run counts. If both were tied, disqualified or did not finish the first run, the competitor who skied the furthest distance in the second run will advance to the next round.

1232.5 Penalty Time; The maximum penalty time will be 0.50 sec. In all cases the maximum time difference for the first run of each pairing can never be higher than the penalty time. If both competitors are tied after the second run the competitor who wins the second run advances to the next round. If both competitors are disqualified or did not finish in the second run the competitor who skied the furthest distance before disqualification or did not finish advances. If both competitors are disqualified or did not finish at the same gate in the second run then the competitor who won the first run will advance.

1233 Slalom Rules

In the case of issues or items not covered in art. 1220 – 1232 the Rules for Slalom (art. 800) must be considered. Special Rules for Cups may also be applied.

Table

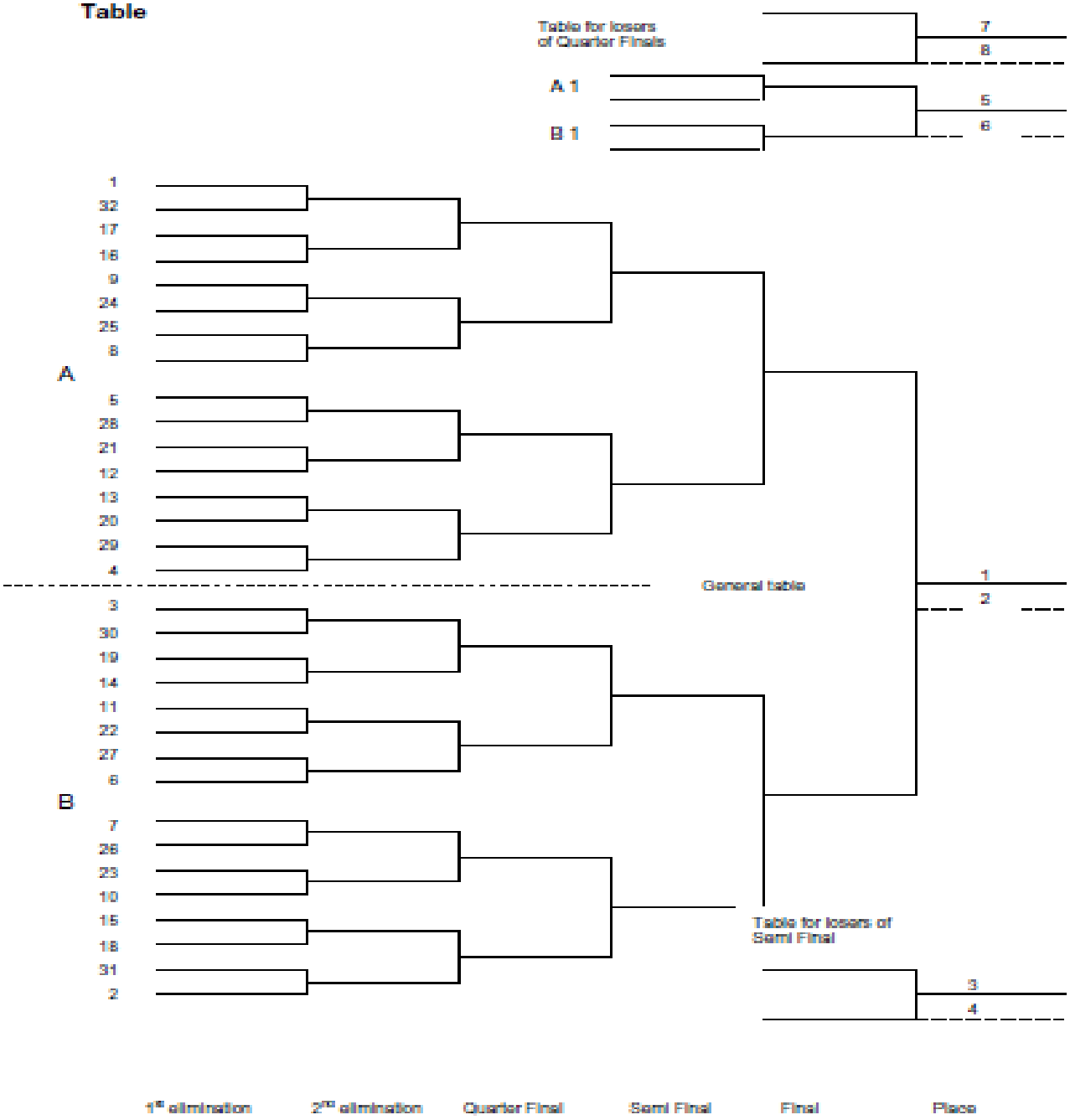
Table for losers of Quarter Finals
A 1
B 1
7
8
5
6
1
32
17
16
9
24
25
8
A
5
28
21
12
13
20
29
4
General table
1
2
3
30
19
14
11
22
27
6
B
7
26
23
10
15
18
31
2
Table for losers of Semi Final
3
4
1st elimination
2nd elimination
Quarter Final
Semi Final
Final
Place

1240 KO System

1240.1 Participation

All competitors are admitted to the Qualification run according to the corresponding Series Rules.

1241 Mode and time frame

Due to organisational reasons it should not be permitted to hold another event on the same day.

1241.1 *Preliminary Round (qualification run) - course 1*

- Classical execution, traditional course length and vertical drop
- Starting order according to the corresponding Series Rules
- Valid for FIS points with FIS adder
- The starting numbers remain the same for the complete event

1241.2 *Intermediate Round, 1st run - course 2*

The thirty (30) fastest competitors from the Preliminary Round start in an elimination heat (the 30th against the 1st, etc.). The three (3) best lucky-losers are qualified for the next run and are ranked in order of their race time after the 15 qualified competitors.
If two competitors from the same heat do not finish (DNF) or are disqualified (DSQ) in the 1st run, the lucky-loser option is adopted (the fourth (4th) best lucky-loser will be qualified for the 2nd run). In case of a tie, both competitors advance to the next run.

Break

1241.3 *Intermediate Round, 2nd run - course 3*

The fifteen (15) qualified competitors plus the three (3) fastest lucky-losers (only two (2) lucky-losers in case of a tie in the 1st Intermediate Round) again compete in an elimination run (the 18th against the 1st, etc.).
If two competitors from the same heat are DNF or DSQ in the 2nd run, the lucky-loser from the 2nd run will be qualified for the 3rd run (final run) in order to have nine (9) competitors. In case of a tie in one heat, both competitors advance to the final.

Break

1241.4 *Final Run - course 3*

The nine (9) qualified competitors (10 competitors in case of a tie in the 2nd Intermediate Round) start in the reversed order of their times in the 2nd run of the Intermediate Round.

1242 Results after the Intermediate Rounds and the Final

1242.1 After the 1st run of the Intermediate Round, ranks 19 - 30 are allocated (ranking according to times, in case of DNF, DNS or DSQ according to the time in the Qualification Round).

1242.2 After the 2nd run of the Intermediate Round, ranks 10 - 18 are allocated (ranking according to times, in case of DNF, DNS or DSQ according to the time of the 1st Intermediate Round).

1242.3 After the Final, ranks 1 - 9 are allocated (ranking according to times, in case of DNF, DNS or DSQ according to the time of the 2nd Intermediate Round).

1242.4 The Final result will be established by adding the 2nd and 3rd run = Winner

1242.5 Protest time: 5 minutes after the last heat (after each run).

ICR INDEX (2016) ENGLISH (A - Z)	1st section	2nd section	3rd section	SPECIAL RULES
A				
Abbreviations		end of 3rd section		
Accreditation, control		601.4.9.1		
Accreditation, sanctions	223.1.4 223.2.1 223.3.1 223.5 223.6 224.2 224.7 226.1			
Accreditation, service personell / supplieres	220.f			
Accreditation, signature	211.1.3			
Accreditation, teams	216.3	**604.f**	704.5	
Advertising, Competitions	**206.f** 208.3.1 220.2	614.1.1 690.4		**FIS Specifications for Competition Equipment and Commercial Markings**
Advertising, Competitors	see: Competitors, Advertising and Sponsorship			
Advertising, Equipment / Outfit	see: Equipment, Advertising and Commercial Markings			
Age Limits		**607.f** 608.3 602.1.4.1.		
Agreement, Race Organiser	see: Organiser, Appointment / Agreement			
Alpine Combined			**1101.f**	
Announcement / Programme / Race Notice	213 **214**			
Appeal, Commission	224.12 224.13 224.14 **225.f**			
Appeal, Deadline	224.4. 224.10.2			
Appeal, Doping Cases	203.2.1			
Appeal, Further / FIS Court	**225.4.f**	647.1.4		**FIS Statutes**
Appeal, License	207.3			
Appeal, Remedies	223.1.4. **224.10.f** 224.11.f	640.3 **647.f**		**FIS Statutes**
Appointment, Course Setters	see: Course Setter, Appointment			
Appointment, Jury members	see: Jury, Appointment			
Appointment, Organising Committee	see: Organising Committee, Appointment			
Appointment, Race Organiser	see: Organiser, Appointment / Agreement			
Appointment, TD	see: TD, Appointment			
Artificial Light		**655.f**		
Athlethes declaration	203.3 204.1.6 215.5	605.1		**FIS Athletes declaration**
Award Ceremony	205.4 206.6 **206.7** 206.8 213.7 **219.f**	**619**		

ICR INDEX (2016)	1st	2nd	3rd	SPECIAL
ENGLISH (A - Z)	section	section	section	RULES
Award Ceremony, Prizes	see: Prizes			
B				
Betting	see: Gambling			
Bibs / Start Numbers	206.8 206.9	605.2 **606.1** 628.2 628.3	704.6 1211.3	**FIS Advertising Guidlines / FIS Specifications for Competition Equipment and Commercial Markings**
Blue colour	see: Dye			
C				
Calculation, Results	see: Results, Calculation			
Calendar, FIS	see: FIS, Calendar			
Cancellation, Competition	202.1.2.4 214.3	601.4.6.2 601.4.9.1 602.4.2		
Chief of Course		**601.3.2**	802.1.4 803.4.6	
Chief of Medical and Rescue Service	**221.6**	**601.3.8**		
Chief of Race		**601.3.1** 601.4 601.4.1.3 601.4.2.4 601.4.5.2		
Youth Competitions	201.6.10	602.2.3 607 **608** 621.3.1	801.1.3 801.2.3 801.2.4 803.2.1 901.1.4 901.2.4 903.1.4 906.2 1001.1.3 1001.3.4 1002.4 1003.1.4 1210.7	
Youth Kombi		608.12		
CIT				**Special Rules**
Classification, Competitions	see: Competitions, Classificiations			
Climb back		**614.2.3** 661.4.1 663.f		
Closed Course	see: Course, closed			
Coaches / Trainers	205.8 200.6 216.3 216.4 217.3	**604.f** 613.1 614.1.4 645 646.2	703.2.2 703.2.4 1223.4	
Combined	201.6.2 201.6.9	608.12 617.3.2	**1100.f**	
Competition, Cancellation	see: Cancellation, Competition			
Competition, Duration	see: Duration, Competition			
Competition, Equipment / Outfit	see: Equipment / Outfit, Competition			
Competition, Interruption	see: Interruption, Competition			

ICR INDEX (2016)	1st	2nd	3rd	SPECIAL
ENGLISH (A - Z)	section	section	section	RULES
Competition, Organiser	see: Organiser, Competition			
Competition, Postponement	see: Postponement, Competition			
Competition, Suits	see: Equipment / Outfit, Competitors (Suits)			
Competition, Termination	see: Termination, Competition			
Competitions, Classifications / Types / Levels	**201.f**	618	1100.2	
Competitors, Advertising and Sponsorship	204.1.4 **206.f** **207.f**			
Competitors, Equipment / Outfit	see: Equipment / Outfit, Competitors			
Competitors, FIS Licence	see: FIS Licence			
Competitors, Insurance	see: Insurance, Competitors			
Competitors, Obligations and Rights	**205.f** 215.5.	601.4.3.1		
Competitors, Qualification	**204.f** 211.3			
Continental Cup	201.3.3			**Rules for the Alpine FIS Continental Cups**
COORP				**Special Rules**
Course		**614.f**		
Course Length		617.3.4	701.2 1001.2	
Course Setter		601.4.6.1 601.4.10 **603.f** 614.1.2	803.1 803.4.6 903.1.4 1228.f	
Course Setter, Appointment		**603.2.f**		
Course Setter, Replacement		**603.5.f**		
Course Setting		601.4.6.1 608.12.1 **614.1.2.f** 615.1.2	703,f 803.f 903.f 1003.f	
Course, Closed	220.4 220.5.f	601.4 604.1 614.1.4 627.4	1002.3	
Course, Homologation	see: Homologation, Course			
Course, Preparation		601.3.2 601.4.6.1	703.2 802.1.4 902.2 1002.2 1223.f	
Court of Arbitration for Sport	203.2.1			**FIS Statutes**
Court, FIS	see: Appeal, Further / FIS Court			
Crash Helmet	206.6 206.7	**606.4** 608.8.2 627.6	707 807 907 1007	
D				
Deadline, Appeals	see: Appeal, Deadline			
Deadline, Entries	see: Entries, Deadline			
Deadline, Protests	see: Protests, Deadline			
Decisions, Jury	see: Jury, Decisions			
Directives, Jury	see: Jury, Directives / Instructions			

ICR INDEX (2016) ENGLISH (A - Z)	1st section	2nd section	3rd section	SPECIAL RULES
Did Not Finish (DNF)		601.3.4 617.3.4 627.7		
Did Not Start (DNS)		601.3.3 617.3.4 627.7		
Direction changes		608.12.4.3 617.3.4	801.2.4 901.2.4 1001.3.4	
DISABLED				**Special Rules**
Disciplines, FIS	see: FIS Disciplines			
Disqualifications (DSQ)	223.3.2 223.3.3 223.6 223.8	601.4.10 613.7 617.2 617.3.4 627.7 **629.f** 643.4	805.4 1231 1232	
Doping	203.2.1 204.1.1 205.2 **221.f** 224.18 226			**FIS Antidoping Rules and Guidelines**
Double Entries	see: Entries, Double			
Downhill	201.6.2		**700**	
Draw (Group Draw)	204.1.1 205.2 **217.f**	601.3.7 601.4.6.2 601.4.10 608.6 **621.f**		
Duration, Competition		624.1.2.2		
Duration, Run / Competition	see: Run, Duration			
Duties, Jury	see: Jury, Duties			
Duties, Referee	see: Referee, Duties			
Duties, TD	see: TD, Duties			
Dye	see: Marking (Gates, Course)			
E				
Electronic Media (TV, Radio, New Media)	**208.f**			
Entries	213.8 214.2 **215.f** 217.2	601.4.9.1		
Entries, Deadline	213.8 215.1			
Entries, double	215.2	621.12		
Entry League		650.5	701.1.3 801.1.4 801.2.4 901.1.5 901.2.4 1001.1.4 1001.3.4	

ICR INDEX (2016) ENGLISH (A - Z)	1st section	2nd section	3rd section	SPECIAL RULES
Equipment / Outfit, Competitors	**222.f** 224.6	601.3.3 601.4.9.2 **606.f** 608.8.f 615.1.7 627.2 627.8 641.1		**FIS Specifications for Competition Equipment and Commercial Markings**
Equipment / Outfit, Competitors (Suits)		**606.2**		
Equipment / Outfit, Sponsorships and Advertising and Markings	**206.f** **207.f** 220.2	601.4.6.3 606.6 627.1 627.2 628.1 628.11		**FIS Specifications for Competition Equipment and Commercial Markings**
European Cup		603.2.2	806.3	**Rules for the Alpine FIS Continental Cups**
Events	201.4.f **201.5** 201.6.f		700 - 1240	
Ex aequo	219.2	617.3.3		
F				
False start	see: Start fault			
Film Rights	**209.f**			
Finish		614.1.1 **615.f**	704.3 803.4.5 1227	
Finish, Controller		612.6		
Finish, Photo	see: Photo Finish			
Finish, Red line	206.5	615.1.5 628.1.10		
Finish, Referee		601.3.4 601.4 615.4 628.9 628.11 665.1		
FIS Court	see: Appeal, Further / FIS Court			
FIS Races	201.3.4	2nd	3rd section	
FIS Calendar	200.1 **202.f** 213 218.3.2			**FIS Rules for the calendar and fees**
FIS Disciplines	**201.4.f**			
FIS, Internet Policies	208.1 208.5.1 218.2 **218.3.f**			**FIS Internet Policies**
FIS Licence	**203.f** 204.1 204.2 207.3			

ICR INDEX (2016) ENGLISH (A - Z)	1st section	2nd section	3rd section	SPECIAL RULES
FIS Points	202.1.2.5 203.5.4 218.3.3 218.3.4	601.4.9.1 611.2 **618** 621.2 626 647.1.1	1210.4	**Rules for the Alpine FIS Points**
FIS Points, Limit of Competitions		607.3		
Forerunners		601.4.6.1 **605.f** 608.12.3.3 608.12.4.3	707 807 907 1007	
Free-skiing			1002.3	
G				
Gambling, Betting	**205.8**			
Gate Fault		601.4.10 **661.4.f**		
Gate Fault, must not continue		614.2.2 628.8		
Gate Panels, Advertising		601.4.6.1 614.1.4 668.2 680.2.1.2 **690.f**	701.3.2 901.2.2 1001.3.2 1224.1	
Gate Panels, Advertising		690.4		**FIS Advertising Rules**
Gate Judges		601.3.5 601.4.6.1 601.4.10 624.2 646.2 **660-669**	1231	
Gate line		**661.4.f**		
Gate Passage, Explanation		**661** **661.4.f**		
Gates		608.12.3.2 608.12.4.2 614.1.2.2 614.1.2.3 615.1.2 623.1.2 **661**	701.3.f 801.2.f 803.2 803.3 901.2.f 1001.3.f 1224	
Gates, Non-essential changes		614.1.5		
Gates, number of gates / direction changes		608.12.4.3	703.1 801.2.4 901.2.4 1001.3.4 1222	
Gates, Numbering		601.3.5 614.1.2.3		
Gates, Reset			906.1	
Giant Slalom Single Gate			904	
Giant Slalom	201.6.2		**900**	
H				
Helmets	see: Crash Helmets			

ICR INDEX (2016) ENGLISH (A - Z)	1st section	2nd section	3rd section	SPECIAL RULES
Homologation, Course	202.1.2.3	601.4.9.1 **650.f**	702.3 1002.4 1101.2 1233	
Homologation, Gate Panels		**690.f**		
Homologation, Slalom poles		**680.f**		
Homologation, Timing Equipment		**611.2.f**		
I				
Inspection, Competitors		601.4.6 603.7.4 608.12.5 614.1.5 614.3.2 628.4	703.2.f 704.2 704.8.5 705.1 1230.2.4	
Inspection, Course Setter		603.7.1	803.1.1 1228.2	
Inspection, Jury		601.3.3 601.3.4 601.4.6.1 614.3.1		
Inspection, Referee		601.4.10		
Instructions, Jury	see: Jury, Directives / Instructions			
Insurance, Competitors	204.2 205.6.6 212.4			
Insurance, Organiser	**212.f**	601.4.9.1		
Interference, Competitor		**623.2.f**		
Internet Policies, FIS	see: Data Exchange; Internet Policies			
Interruption, Competition		601.4.6.2 605.5 623.2.7 **624.f** 626		
Intervals, start	see: start, intervals			
J				
Jury		**601.4.f**		
Jury, Decisions	211.1.3 216.4 223.5 223.6 **224.8.f**	**601.4.5.f** **601.4.7** 604.2.1 614.3.3 640.3		
Jury, Directives / Instructions	200.2 205.1 205.3 223.1.1 224.8.3	601.4.6.3 601.4.9.2 641.6 643.6		
Jury, Appointment		**601.2.f** 601.4.1.f 601.4.2.f 601.4.3.f		
Jury, Duties		**601.4.6 .f**		
Jury, Tenure		601.4.4		
Jury, Voting		601.4.5		
K				
KO System			**1240**	

ICR INDEX (2016) ENGLISH (A - Z)	1st section	2nd section	3rd section	SPECIAL RULES
L				
Licence, FIS	see: FIS, Licence			
Level, Competitions	see: Competitions, Classifications / Types / Levels			
M				
Major Events				
Marking (Gates, Course)		601.3.5 601.4.9.1 614.1.2.1 **614.1.2.2** **614.1.2.4**		
Masters				**FIS Master Rules Alpine**
Medical Examinations, Competitors	204.1. 221.1 221.2 221.5	604.1 627.3		**FIS Medical Guide**
Medical Service, Organisers	**221.6**	601.3.8 601.4.6.2 601.4.6.3 601.4.9.1	704.4	**FIS Medical Guide**
Microphones		616		
N				
New Media	see: Electronic Media			
Number of Gates	see: Gates, number of gates / direction changes			
Numbering (Gates)	see: Gates, numbering			
O				
Officials, Organiser	213.3	**601.3.f** 612.f		
Officials, Teams		**604.1.f**		
Olympic Winter Games	201.3.1 208.2.4 218.1.1	2nd section	3rd section	**IOC Rules**
Organiser, Appointment / Agreement	202.1.3			**World Cup Agreement**
Organiser, Competitions	**211.f**	600		
Organiser, Insurance	see: Insurance, Organiser			
Organising Committee	**211.2**	601.1 601.2.4		
Organising Committee, Appointment Members		**601.3.f**		
Outfit, Competitors	see: Equipment / Outfit, Competitors			
P				
Parallel Events			**1220**	
Penalties, Sanctions	**223.f**	613.6 627.f **628.f** 629.f		
Photo Finish		611.3.2.2		
Points, FIS	see: FIS Points			
Poles	see: Slalom Poles			
Postponement, Competition	202.1.2.4 202.1.2.5 214.3 217.6	602.4.2		
Preparation, Course	see: Course, Preparation			

ICR INDEX (2016)	1st	2nd	3rd	SPECIAL
ENGLISH (A - Z)	section	section	section	RULES
Prize Money	205.4 219.1 223.3.2			
Prize-giving	see: Award Ceremony			
Prizes	204.1.3 205.4 **219.f** 223.3.2			
Programme / Announcement / Race Notice	see: Announcement / Programme / Race Notice			
Protests	222.6	601.3.7 601.4.6.3 601.4.9.3 606.2.3 **640 - 646** 647.2		
Protests, Deadline	206.8	601.4.4.2 612.7 617.2.f **643.f**	1242.5	
Publications, Results	see: Results, Publications			
Q				
Qualification, Competitors	see: Competitors, Qualifications			
Questions, not covered by the rules		601.4.7		
Quotas, competitors	200.3	608.5.f **618**		
R				
Race Organiser	see: Organiser			
Race Points		617.3.2 617.3.4 **618**	1210.5	
Radio	see: Electronic Media			
Radios		601.3.8 **601.4.8** 601.4.9.1 611.1		
Red Line, Finish	see: Finish, Red Line			
Referee	223.8	601.2.f 601.4 601.4.1.f 601.4.2.f **601.4.10** 603.7.1 613.7 615.4 617.2.2 623.3.1	1228.1	
Remedies	see: Appeal, Remedies			
Replacement, Course Setter	see: Course Setter, Replacement			
Replacement, TD	see: TD, Replacement			
Re-run		601.4.6.2 **623.f** 628.7 666.1	705.2 705.3	
Rescue service	see: Medical Guide			

ICR INDEX (2016) ENGLISH (A - Z)	1st section	2nd section	3rd section	SPECIAL RULES
Results, Calculation		611.2.1 **617.f** 647.1.1	1100.7 1210.2 1242	**WC, data+timing spec.**
Results, Publications	**218.f**	601.3.7 601.4.9.3 612.4. 612.7 617.f 643.5		
Rights and Obligations, Competitors	see: Competitors, Rights and Obligations			
Run, duration	see: Duration, Competition			
Run, First		601.4.10 605.4 627.7	805.2.1 903.1.1 905.1	
Run, Second		603.2.3 608.6.6 **621.11.f**	706.2 805.2.2 806.2 903.1.1 905.2 906.1	
Run, termination	see: Termination, Run			
Runs		603.2.3 608.12.6	701.1.3 706.1 706.2 801.1.4 806.2 901.1.4 906 1006	
S				
Sanctions, General Conditions	200.6 203.5.5 **223.1.f** 224.15 224.16			
Sanctions	**223**			**FIS Statutes**
Sanctions, Appeal	see: Appeal, Sanctions			
Sanctions, Appeal Commission	see: Appeal Commission			
Sanctions, Applicability	**223.2 .f**	601.5		
Sanctions, Further Appeals	see: Appeal, Further			
Sanctions, Penalties	see: Penalties, Sanctions			
Sanctions, Procedural Guidelines	223.9 **224 .f**	601.4.6.3 611.3.3		
Sanctions, Recognition	200.6 203.5.5			
Sanctions, Remedies	see: Appeal, Remedies			
Sanctions, Violations	**226.f**			**FIS Statutes**
Second Run	see: Run, Second			
Service Personnel, Teams	**220.f**	613.1 614.1.4		
Single Gate Giant Slalom	see: Giant Slalom Single Gate			
Single Pole Slalom	see: Slalom Single Pole			
Snow Seed		621.1		
Ski Brakes		**606.3** 627.6.		

ICR INDEX (2016)	1st	2nd	3rd	SPECIAL
ENGLISH (A - Z)	section	section	section	RULES
Slalom Single Pole			**804**	
Slalom	201.4.2		**800**	
Slalom Poles		614.1.2.f **680.f**	703.1.3 801.2 803.2.1 803.4.6 803.5 901.2 1001.3	**FIS Specifications for Flexpoles**
Sponsorship, Competitors	see: Competitors, Advertising and Sponsorship			
Start		**613**		
Start fault (False Start)		**613.7**	805.4	
Start Intervals		601.4.6.1 612.1 613.6. 613.7 **622** 623.4	704.7 805.1 805.3.1 1005	
Start Numbers	see Bibs, Start Numbers			
Start Order	217	601.4.6.1 605.5 620 **621**	704.7 706.2.3 805.2 905.2 1005 1210.1.4	
Start Referee		601.3.3		
Start, delayed		613.6		
Start, not permitted		627		
Start Officials		601.3.3 612		
Start Signal		613.4	805.3	
Start, valid / false		601.3.3 613.7 628.5 629.3	805.4	
Statutes, FIS	223.1.4			**FIS Statutes**
Stepping back	see : climb back			
Suits, Competitions	see: Competitions, Suits			
Super-G	201.4.2		**1000**	
Suppliers	206 220			
T				
TD (Technical Delegate)	200.5	602		
TD, Appointment		602.2		
TD, Duties	200.5	601.4.9 602.1.1		
TD, Expenses		602.5		
TD, Replacement		602.3		
Team Captains	216 217.3	604.2 645		
Team Captains Meetings	216	601.3.1 601.3.7 603.7.7 604.3		

ICR INDEX (2016) ENGLISH (A - Z)	1st section	2nd section	3rd section	SPECIAL RULES
Team Competitions	201.4.2		1210.2 1220	**Rules for the Nations WSC**
Teams, Service Personnel	see: Service Personell, Teams			
Team, Sponsorship and Advertising	206			
Team, Timing		611.4		
Technical Advisor		601.4.11		
Television, Media Rights	**208**			**TV Prod. Guidelines**
Termination, Competition		601.4.6.2 624 625 626 647.1.1		
Termination, Run		624 806.1 906.1		
Timing		**611**		**Timing Booklet and Appendix**
Timing, Hand Timing		611.2.2 611.3.2.1		
Timing, Officials		601.3. 6 612		
Timing, Technical Installations		611		
Trainers	see: Coaches / Trainers			
Training, Official		601.4.4.1 601.4.6.f 605.1 606.3 621.4 621.7 624 627.5	703.2 704 705.2 904	
U				
UNI				**Special Rules**
Unsportsmanlike manner	204.1.1 205.5 223.1.1	627.1		
Sportsmanlike manner	see: Unsportsmanlike manner			
Fairplay	see: Unsportsmanlike manner			
V				
Vertical drop		601.4.9.1	701.1 706.2.2 801.1 901.1 1001.1 1102	
Video control		675	806.3	
Voting / Franchise, Jury	see: Jury, Voting			
W				
Warm up, slope		614.1.3		
World Cup, FIS	201.3.2 207.6 208.2 211.1.3	2nd section	3rd section	**FIS World Cup Rules**

ICR INDEX (2016)	1st	2nd	3rd	SPECIAL
ENGLISH (A - Z)	section	section	section	RULES
World Ski Championships	201.3.1 202.1.1 208.1 208.4 215.4	2nd section	3rd section	**see also : Major Events**
Y				
Yellow Flags		601.4.6.1 623.1.3	705 1008	
NOTE: This Index is an aid - No claim for completeness !				

Abbreviations National Ski Association (NSA)

ALB	Albania
ALG	Algeria
AND	Andorra
ARG	Argentina
ARM	Armenia
ASA	American Samoa
AUS	Australia
AUT	Austria
AZE	Azerbaijan
BAR	Barbados
BEL	Belgium
BER	Bermuda
BHA	Bahamas
BIH	Bosnia-Herzegovina
BLR	Belarus
BOL	Bolivia
BRA	Brazil
BUL	Bulgaria
CAN	Canada
CAY	Cayman Island
CHI	Chile
CHN	China P.R
CMR	Cameroon
COL	Colombia
CRC	Costa Rica
CRO	Croatia
CYP	Cyprus
CZE	Czechia
DEN	Denmark
EGY	Egypt
ESA	El Salvador
ESP	Spain
EST	Estonia
ETH	Ethiopia
FIJ	Fiji
FIN	Finland
FRA	France
GBR	Great Britain
GEO	Georgia
GER	Germany
GHA	Ghana
GRN	Grenada
GRE	Greece
GUA	Guayana
HKG	Hong Kong
HON	Honduras
HUN	Hungary
IND	India
IRI	Iran
IRL	Ireland
ISL	Iceland
ISR	Israel
ISV	U.S. Virgin Island
ITA	Italy
JAM	Jamaica
JPN	Japan
KAZ	Kazakhstan
KEN	Kenya
KGZ	Kyrgyzstan
KOR	Korea
KOS	Kosovo
KUW	Kuwait
LAT	Latvia
LES	Leshoto
LIB	Lebanon
LIE	Liechtenstein
LTU	Lithuania
LUX	Luxembourg
MAD	Madagascar
MAR	Marocco
MDA	Moldova
MEX	Mexico
MGL	Mongolia
MKD	Macedonia
MLT	Malta
MNE	Montenegro
MON	Monaco
NED	Netherlands
NEP	Nepal
NOR	Norway
NZL	New Zealand
PAK	Pakistan
PER	Peru
PHI	Philippine
POL	Poland
POR	Portugal
PRK	D.P.R. Korea
PUR	Puerto Rico
ROU	Rumania
RSA	South Africa
RSM	San Marino
RUS	Russia
SEN	Senegal
SLO	Slovenia
SRB	Serbia
SUD	Sudan
SUI	Switzerland
SVK	Slovakia
SWE	Sweden
SWZ	Swaziland
THA	Thailand
TJK	Tajikistan
TPE	R.O.C Taipei
TRI	Trinidad & Tobago
TUR	Turkey
UKR	Ukraine
URU	Uruguay
USA	United States of America
UZB	Uzbekistan
VEN	Venezuela
ZIM	Zimbabwe

Check List for vertical drop (VD), number of gates (NG) and number of direction changes (DC)

EVENT			OWG/WSC	WC	COC	FIS	CHI	ENL
DH (Art. 700) **Downhill**	L	VD	450 – 800					1 Run: 400-500m 2 Runs: 300-400m
	L M	Gate Panel	0.75 x 0.50 //**colour for gate panels** (see art. 701.3.2)					
		VD	350 – 450 (2 Runs Race)					
		NG	**as required**					
	M	VD	800 (750[1]) - 1100		500 - 1100	450 - 1100		1 Run: 400-500m 2 Runs: 300-400m
SL (Art. 800) **Slalom**	L	VD	140 - 220		120 - 200		100 - 160	80 – 120 3 Runs: 50 min
	L M	DC	**Number of direction changes**					
			30%-35% (+ / - 3)				32%-38%(+/-3)	30%-35% (+ / - 3)
	M	VD	180 - 220		140 - 220		100 - 160	80 – 140 3 Runs: 50 min
GS (Art. 900) **Giant Slalom**	L	VD	300 - 400		250 - 400		200 - 350[2)]	200 - 250
	L M	DC	**Number of direction changes**					
			11% - 15%				13 % - 18%	13% - 15%
		Gate Panel	0,75 x 0,50 **red (orange)& blue (see art. 695)**					
	M	VD	300 - 450		250 - 450		200 - 350[2)]	200 - 250
SG (Art. 1000) **Super-G**	L	VD	400 - 600		350 - 600		250 - 450	350 - 500
	L M	DC	**Number of direction changes**					
			6% min			7% min	8% - 12%	7% min
		Gate Panel	0,75 x 0,50 **red (orange)& blue (see art. 695)**					
	M	VD	400 - 650			350 – 650	250 - 450	350 - 500
P (Art. 1220) **Parallel**	L M	VD	80 - 100				U14: 60-U16: 80	
		NG	20 - 30				U14: 12 – 15 U16: 15 – 22	
		Gate Panel	0.75 x 0.50 **red course** / **blue course**					

1) **In exceptional case** (see art. 701.1.1)
2) **see art. 901.1.4**

03 IBU EVENT AND COMPETITION RULES

Adopted by the 1998 IBU Congress with amendments by the 2000, 2002, 2004, 2006, 2008, 2010, 2012, 2014 and 2016 Congresses

LIST OF CONTENTS

Article 1	General Regulations	3
Article 2	Organization Bodies and Appointments	28
Article 3	Competition Venues and Facilities	34
Article 4	Competition Equipment and Clothing for Events	47
Article 5	Training and Zeroing	51
Article 6	Start Regulations	54
Article 7	Skiing Regulations	60
Article 8	Shooting Regulations	63
Article 9	The Finish, Competition Time and Results	69
Article 10	Protests	74
Article 11	Penalties	75
Article 12	World Championships - Event Rules	75
Article 13	The Olympic Winter Games – Event Rules	81
Article 14	Continental Championships and Continental Cups – Event Rules	83
Article 15	World Cup - Event Rules	85
Article 16	IBU Cup - Event Rules	94
Article 17	Open European Championships – (OECH)	99
Article 18	Junior IBU Cup	101
Article 19	Entry into Force	103

LIST OF TABLES

Table 1	Competition Specifications – Skiing and Shooting	8

1. GENERAL REGULATIONS

1.1 Application

These rules must be applied at all IBU events. At the Olympic Winter Games (OWG) these rules must be used accordingly, except when otherwise stipulated by the IOC. In other international events (as defined in the IBU Constitution) these rules will be applied unless changes, which have been authorized by the IBU, are specified in the invitation.

1.2 Classes of Competitors

The IBU competition season runs from 1 November to 31 October. Age classes for the entire IBU competition season are based on the competitor's age in the calendar year. IBU competitions are held in the following age classes: Men/Women, Junior and Youth

IBU AGE CLASS	ELIGIBLE ATHLETE YEAR OF BIRTH		
Season	Men/Women	Junior	Youth
01.11.16 – 31.10.17	1995 + older	1996 - 1997	1998 - 2001
01.11.17 – 31.10.18	1996 + older	1997 - 1998	1999 - 2002
01.11.18 – 31.10.19	1997 + older	1998 - 1999	2000 - 2003
01.11.19 – 31.10.20	1998 + older	1999 - 2000	2001 - 2004

1.2.1 Men and Women

Male and female competitors who have turned 21 at the cut-off-date 31 December will be classed as men and women respectively. From the season starting on 1 November of that same year onward, they may only start in men's or women's competitions, according to their gender.

1.2.2 Junior Men and Junior Women

Male and female competitors who have turned 19 at the cut-off-date of 31 December will be classed as junior men and junior women respectively. From the season starting on 1 November of that same year onward, they may only start in junior men's and junior women's competitions, according to their gender. Separate competitions will be organized for them. However, junior men will be permitted to participate in men's and junior women in women's competitions respectively, according to

gender. Moreover, juniors may only participate in one Relay competition at the OECH.

1.2.3 Youth Men and Youth Women

Competitors who have not yet reached junior men's or junior women's age as defined above and are at least 16 at the cut-off-date of 31 December will be classed as youth men or youth women respectively, and separate competitions will be organized for them. Youth men will be permitted to take part in men's and junior men's competitions, and youth women will be permitted to take part in women's and junior women's competitions. However, at an event they may start in only one and the same class of competitor in the Individual, Sprint and Pursuit competition. Moreover, youth athletes may only participate in one Relay competition at the Y/JWCH.

(A list of the age groups for the classes of competitors is available for download on the IBU website www.biathlonword.com)

1.3 Types of Competitions

The following types of competitions are established for IBU events:

1.3.1 Men

a. 20 km Individual;
b. 10 km Sprint;
c. 12.5 km Pursuit;
d. 4 x 7.5 km Relay;
e. 15 km Mass Start;
f. 4 km Super Sprint Final / 2.4 km Super Sprint Qualification.

1.3.2 Women

a. 15 km Individual;
b. 7.5 km Sprint;
c. 10 km Pursuit;
d. 4 x 6 km Relay;
e. 12.5 km Mass Start;
f. 4 km Super Sprint Final / 2.4 km Super Sprint Qualification.

1.3.3 Men and Women/Mixed Relays

a. 2 x 6 km Women + 2 x 7.5 km Men
b. 6 km Women + 7.5 km Men

1.3.4 Junior Men

a. 15 km Individual;
b. 10 km Sprint;
c. 12.5 km Pursuit;
d. 4 x 7.5 km Relay;
e. 12.5 km Mass Start;
f. 4 km Super Sprint Final / 2.4 km Super Sprint Qualification.

1.3.5 Junior Women

a. 12.5 km Individual;
b. 7.5 km Sprint;
c. 10 km Pursuit;
d. 3 x 6 km Relay;
e. 10 km Mass Start;
f. 4 km Super Sprint Final / 2.4 km Super Sprint Qualification.

1.3.6 Junior Men/Junior Women/Mixed Relays

a. 2 x 6 km Junior Women + 2 x 7.5 km Junior Men
b. 6 km Junior Women + 7.5 km Junior Men

1.3.7 Youth Men

a. 12.5 km Individual (penalty 45 sec);
b. 7.5 km Sprint;
c. 10 km Pursuit;
d. 3 x 7.5 km Relay;
e. 10 km Mass Start
f. 4 km Super Sprint Final / 2.4 km Super Sprint Qualification.

1.3.8 Youth Women

a. 10 km Individual (penalty 45 sec);
b. 6 km Sprint;
c. 7.5 km Pursuit;
d. 3 x 6 km Relay;
e. 7.5 km Mass Start
f. 4 km Super Sprint Final / 2.4 km Super Sprint Qualification.

1.3.9 Youth Men/Youth Women/Mixed Relays

a. 2 x 6 km Youth Women + 2 x 7.5 km Youth Men
b. 6 km Youth Women + 7.5 km Youth Men

1.3.10 Competition Specifications

The following Table 1 and the appended notes set out the skiing and shooting specifications of classes of IBU competitors and types of competitions, and apply to all IBU events. The competition jury may, in exceptional course conditions, adjust the distance between shooting bouts and course specifications in order to secure the conduct of the competition.

Column 1: Class of Competitor: according to these Rules. **Column 2:** Course Length and Type of Competition: according to these Rules. C**olumn 3:** Start Types and Intervals: the method by which the start is made and the interval between the starts of two consecutive competitors. **Column 4:** Number of Ski Loops: course rounds to be skied by the competitor. **Column 5:** Shooting Bouts and Shot Penalties: the number of shooting bouts the competitor must do and the shooting position to be used in the bout (P = Prone, S = Standing), the number of rounds the competitor must fire in each bout, and the automatic shot-penalty -1 minute of added time or a 150 m penalty loop - imposed on a competitor for each target left standing after all rounds for the bout have been fired. **Column 6:** Distance Between and Location of Shooting Bouts: the minimum distance between successive shooting bouts in the competition and the ski distances after which shooting must occur. **Column 7:** Total Climb (tc): the total vertical ascent in the competition (the sum of all the ascents) for each competitor.

Notes to Table 1 *Height Difference (hd): the maximum permitted difference in altitude between the highest and lowest points on the competition course is 80 m for all competitions. Maximum climb (mc): the maximum permitted height difference of an ascent, without either a flat part or a descent of at least 200 m in length, is 50 m for all competitions. Maximum grade (mg): the maximum grade of all climbs on the course must not exceed 25 percent.*

1. Class of Competitors	2. Course Length and Competition Type	3. Standard Start Types and Intervals	4. Ski Loops
MEN	20 km **INDIVIDUAL**	Single, 30 sec, 1 minute	5
	10 km **SPRINT**	Single, 30 sec, 1 minute	3
	12.5 km **PURSUIT**	Pursuit	5
	15 km **MASS START**	Simultaneous	5
	4 x 7.5 km **RELAY**	Simultaneous and Tag	3
	2.4 km **SUPER SPRINT** QUALIFICATION	Single , 15 sec	3
	4 km **SUPER SPRINT** FINAL	Simultaneous	5
WOMEN MEN	2 x 6 km (W) / 2 x 7.5 km (M) **MIXED RELAY**	Simultaneous and Tag, W, W, M, M	3
	6 km (W) / 7.5 km (M) **SINGLE MIXED RELAY**	Simultaneous and Tag, W, M	W - 4 M - 5
WOMEN	15 km **INDIVIDUAL**	Single, 30 sec, 1 minute	5
	7.5 km **SPRINT**	Single, 30 sec, 1 minute	3
	10 km **PURSUIT**	Pursuit	5
	12.5 km **MASS START**	Simultaneous	5
	4 x 6 km **RELAY**	Simultaneous and Tag	3
	2.4 km **SUPER SPRINT** QUALIFICATION	Single , 15 sec	3
	4 km **SUPER SPRINT** FINAL	Simultaneous	5

5. Shooting Bouts and Shot Penalty 5 Rounds per Bout except Relay	6. Distance between and Location of Shooting Bouts	7. Total Climb
P, S, P, S - 1 minute	4 km - 4 / 8 / 12 / 16 km	600 - 800 m
P, S - 150 m	3.3 km - 3.3 and 6.6 km	300 - 450 m
P, P, S, S - 150 m	2.5 km - 2.5 / 5 / 7.5 / 10 km	350 - 500 m
P, P, S, S - 150 m	3 km - 3 / 6 / 9 / 12 km	400 - 600 m
P, S (each) + 3 Spare Rounds per Bout - 150 m	2.5 km - 2.5 and 5 km	200 - 300 m
P, S (each) + 3 Spare Rounds per Bout - Penalty = Disqualification	800 m - 800 m and 1.6 km	45 - 75 m
P, P, S, S, (each) + 3 Spare Rounds per Bout - Penalty = Disqualification	800 m - 800 m / 1.6 km / 2.4 km / 3.2 km	75 - 125 m
P, S (each) + 3 Spare Rounds per Bout - 150 m	2 km - 2 and 4 km 2.5 km - 2.5 and 5 km	150 - 250 m 200 - 300 m
P,S (each athlete twice) + 3 rounds per bout - 75m	1.5 km - 1.5 and 3 km (each athlete twice)	100 - 240 m 125 - 300 m
P, S, P, S - 1 minute	3 km - 3 / 6 / 9 / 12 km	400 - 600 m
P, S - 150 m	2.5 km - 2.5 and 5 km	200 - 300 m
P, P, S, S - 150 m	2 km - 2 / 4 / 6 / 8 km	200 - 400 m
P, P, S, S - 150 m	2.5 km - 2.5 / 5 / 7.5 / 10 km	350 - 500 m
P, S (each) + 3 Spare Rounds per Bout - 150 m	2 km - 2 and 4 km	150 - 250 m
P, S (each) + 3 Spare Rounds per Bout - Penalty = Disqualification	800 m - 800 m and 1.6 km	45 - 75 m
P, P, S, S, (each) + 3 Spare Rounds per Bout - Penalty = Disqualification	800 m - 800 m / 1.6 km / 2.4 km / 3.2 km	75 - 125 m

1. Class of Competitors	2. Course Length and Competition Type	3. Standard Start Types and Intervals	4. Ski Loops
JUNIOR MEN	15 km **INDIVIDUAL**	Single, 30 sec, 1 minute	5
	10 km **SPRINT**	Single, 30 sec, 1 minute	3
	12.5 km **PURSUIT**	Pursuit	5
	12.5 km **MASS START**	Simultaneous	5
	4 x 7.5 km **RELAY**	Simultaneous and Tag	3
	2.4 km **SUPER SPRINT** QUALIFICATION	Single , 15 sec	3
	4 km **SUPER SPRINT** FINAL	Simultaneous	5
JUNIOR WOMEN MEN	2 x 6 km (W) / 2 x 7.5 km (M) **MIXED RELAY**	Simultaneous and Tag, W, W, M, M	3
	6 km (W) / 7.5 km (M) **SINGLE MIXED RELAY**	Simultaneous and Tag, W, M	W - 4 M - 5
JUNIOR WOMEN	12.5 km **INDIVIDUAL**	Single, 30 sec, 1 minute	5
	7.5 km **SPRINT**	Single, 30 sec, 1 minute	3
	10 km **PURSUIT**	Pursuit	5
	10 km **MASS START**	Simultaneous	5
	3 x 6 km **RELAY**	Simultaneous and Tag	3
	2.4 km **SUPER SPRINT** QUALIFICATION	Single , 15 sec	3
	4 km **SUPER SPRINT** FINAL	Simultaneous	5

5. Shooting Bouts and Shot Penalty 5 Rounds per Bout except Relay	6. Distance between and Location of Shooting Bouts	7. Total Climb
P, S, P, S - 1 minute	3 km - 3 / 6 / 9 / 12 km	400 - 600 m
P, S - 150 m	3.3 km - 3,3 and 6.6 km	300 - 450 m
P, P, S, S - 150 m	2.5 km - 2.5 / 5 / 7.5 / 10 km	350 - 500 m
P, P, S, S - 150 m	2.5 km - 2.5 / 5 / 7.5 / 10 km	350 - 500 m
P, S (each) + 3 Spare Rounds per Bout - 150 m	2.5 km - 2.5 and 5 km	200 - 300 m
P, S (each) + 3 Spare Rounds per Bout - Penalty = Disqualification	800 m - 800 m and 1.6 km	45 - 75 m
P, P, S, S, (each) + 3 Spare Rounds per Bout - Penalty = Disqualification	800 m - 800 m / 1.6 km / 2.4 km / 3.2 km	75 - 125 m
P, S (each) + 3 Spare Rounds per Bout - 150 m	2 km - 2 and 4 km 2.5 km - 2.5 and 5 km	150 - 250 m 200 - 300 m
P,S (each athlete twice) + 3 rounds per bout - 75m	1.5 km - 1.5 and 3 km (each athlete twice)	100 - 240 m 125 - 300 m
P, S, P, S - 1 minute	2.5 km - 2.5 / 5 / 7.5 / 10 km	350 - 500 m
P, S - 150 m	2.5 km - 2.5 and 5 km	200 - 300 m
P, P, S, S - 150 m	2 km - 2 / 4 / 6 / 8 km	200 - 400 m
P, P, S, S - 150 m	2 km - 2 / 4 / 6 / 8 km	200 - 400 m
P, S (each) + 3 Spare Rounds per Bout - 150 m	2 km - 2 and 4 km	150 - 250 m
P, S (each) + 3 Spare Rounds per Bout - Penalty = Disqualification	800 m - 800 m and 1.6 km	45 - 75 m
P, P, S, S, (each) + 3 Spare Rounds per Bout - Penalty = Disqualification	800 m - 800 m / 1.6 km / 2.4 km / 3.2 km	75 - 125 m

1. Class of Competitors	2. Course Length and Competition Type	3. Standard Start Types and Intervals	4. Ski Loops
YOUTH MEN	12.5 km **INDIVIDUAL**	Single, 30 sec, 1 minute	5
	7.5 km **SPRINT**	Single, 30 sec, 1 minute	3
	10 km **PURSUIT**	Pursuit	5
	10 km **MASS START**	Simultaneous	5
	3 x 7.5 km **RELAY**	Simultaneous and Tag	3
	2.4 km **SUPER SPRINT** QUALIFICATION	Single , 15 sec	3
	4 km **SUPER SPRINT** FINAL	Simultaneous	5
YOUTH WOMEN MEN	2 x 6 km (W) / 2 x 7.5 km (M) **MIXED RELAY**	Simultaneous and Tag, W, W, M, M	3
	6 km (W) / 7.5 km (M) **SINGLE MIXED RELAY**	Simultaneous and Tag, W, M	W - 4 M - 5
YOUTH WOMEN	10 km **INDIVIDUAL**	Single, 30 sec, 1 minute	5
	6 km **SPRINT**	Single, 30 sec, 1 minute	3
	7.5 km **PURSUIT**	Pursuit	5
	7.5 km **MASS START**	Simultaneous	5
	3 x 6 km **RELAY**	Simultaneous and Tag	3
	2.4 km **SUPER SPRINT** QUALIFICATION	Single , 15 sec	3
	4 km **SUPER SPRINT** FINAL	Simultaneous	5

5. Shooting Bouts and Shot Penalty 5 Rounds per Bout except Relay	6. Distance between and Location of Shooting Bouts	7. Total Climb
P, S, P, S - 45 sec	2.5 km - 2.5 / 5 / 7.5 / 10 km	350 - 500 m
P, S - 150 m	2.5 km - 2.5 and 5 km	200 - 300 m
P, P, S, S - 150 m	2 km - 2 / 4 / 6 / 8 km	200 - 400 m
P, P, S, S - 150 m	2 km - 2 / 4 / 6 / 8 km	200 - 400 m
P, S (each) + 3 Spare Rounds per Bout - 150 m	2.5 km - 2.5 and 5 km	200 - 300 m
P, S (each) + 3 Spare Rounds per Bout - Penalty = Disqualification	800 m - 800 m and 1.6 km	45 - 75 m
P, P, S, S, (each) + 3 Spare Rounds per Bout - Penalty = Disqualification	800 m - 800 m / 1.6 km / 2.4 km / 3.2 km	75 - 125 m
P,S (each) + 3 Spare Rounds per Bout - 150 m	2 km - 2 and 4 km 2.5 km - 2.5 and 5 km	150 - 250 m 200 - 300 m
P,S (each athlete twice) + 3 rounds per bout - 75m	1.5 km - 1.5 and 3 km (each athlete twice)	100 - 240 m 125 - 300 m
P, S, P, S - 45 sec	2 km - 2 / 4 / 6 / 8 km	200 - 350 m
P, S - 150 m	2 km - 2 and 4 km	150 - 250 m
P, P, S, S - 150 m	1.5 km - 1.5 / 3 / 4.5 / 6 km	125 - 300 m
P, P, S, S - 150 m	1.5 km - 1.5 / 3 / 4.5 / 6 km	125 - 300 m
P, S (each) + 3 Spare Rounds per Bout - 150 m	2 km - 2 and 4 km	150 - 250 m
P, S (each) + 3 Spare Rounds per Bout - Penalty = Disqualification	800 m - 800 m and 1.6 km	45 - 75 m
P, P, S, S, (each) + 3 Spare Rounds per Bout - Penalty = Disqualification	800 m - 800 m / 1.6 km / 2.4 km / 3.2 km	75 - 125 m

1.3.11 Specifications for Single Mixed Relay and Super Sprint

a. Each team competing in the single mixed relay is comprised of one woman and one man. The woman starts, and after shooting both prone and standing, tags off to the man in a hand-over area located just after the penalty loop. The male competitor then shoots both prone and standing and tags off to the same woman again. Each competitor on the team completes four bouts of shooting and the associated ski loops. After the final bout of shooting by the male competitor, he skis the 1.5 km course and goes to the finish. Lapped competitors must move to the side and stop competing in the competition immediately when they are overtaken by the leading competitor. The penalty loop for this competition is 75 m in length. All other rules and procedures for relays apply to the single mixed relay.

b. Super Sprints consist of a qualification and a final competition, which take place on the same day.

1.3.12 Modifications and Other Types of Competitions

The IBU reserves the right to modify existing competitions and to introduce new types of competitions into IBU events.

1.3.13 Event Programs

The schedule, sequence and types of IBU competitions at events will be set by the IBU Executive Board (EB), on the recommendation of the Technical Committee (TC).

1.3.14 Annual Schedule of Events

IBU events will be held annually as stated in the event rules or as directed by the EB. The yearly schedules will be published by the IBU. Dates for the events will be published starting from the day of arrival until the last competition day.

1.4 Eligibility Rules for Competitors and Team Staff

1.4.1 General

Only such competitors and team staff who comply with the following IBU regulations will be eligible to take part in biathlon events and competitions organized by an IBU member federation. In order to be eligible to participate in an IBU event, biathletes and team staff must sign

the IBU Declaration of Obligations, the Court of Arbitration Declaration and the Declaration to Fight Doping in Sport, signifying agreement to abide by and follow all IBU rules and policies. Competitors and team staff members must sign these declarations prior to taking part in their first IBU competition and must include a copy of their passport with their signed declaration.

Each signed declaration will remain in effect until terminated by either party.

1.4.2 Responsibility of Competitors and Team Staff

Competitors and team staff may only participate in an IBU event or competition with materials, equipment, clothing and advertising that are in compliance with the pertinent IBU rules, including the IBU Rules for Advertising. It is the competitors' and team staff's responsibility to ensure that all rules regarding material and advertising are followed and that they undergo materials, equipment and clothing inspections before the start and after the finish. All competitors participating in IBU competitions are requested to certify their nationality, age and gender with their national passport or official photo identification document.

1.4.3 Qualification Criteria

1.4.3.1 Olympic Winter Games

To gain the right to participate in OWG events, a competitor must have 180 IBU qualifying points or less at the end of the last trimester before the OWG, or fulfil one of the following criteria during the current or previous season:

a. Compete in two competitions earning 150 IBU qualifying points or less at IBU Cup, OECH, WCH and/or WC in the Sprint or Individual, or

b. Two finishes in the top half at the JWCH (not Youth), or

c. One result from each of the criteria a. and b. above.

All members of Relay teams must also have met this individual qualification requirement.

1.4.3.2 World Championships

To gain the right to participate in WCH events, a competitor must have 180 IBU qualifying points or less at the end of the last trimester before the WCH, or fulfill one of the following criteria during the current or previous season:

a. Compete in at least one competition earning 150 IBU qualifying points or less at an IBU Cup, OECH, WC or OWG in the Sprint or Individual, or

b. One finish in the top half at the JWCH (not Youth).

All members of Relay teams must also have met this individual qualification requirement.

1.4.3.3 World Cup

The World Cup season consists of three trimesters generally made up of three WC events each, usually WC 1-3, WC 4-6 and WC 7-9. To gain the right to participate in WC events, a competitor must have 150 IBU qualifying points or less at the end of the last trimester, or fulfill one of the following criteria:

a. Compete in at least one competition earning 125 IBU qualifying points or less at an IBU Cup, OECH, WCH or OWG in the Sprint or Individual during the current or preceding trimester; or

b. One finish in the top half at the most recent JWCH (not Youth).

All members of Relay teams must also have met this individual qualification requirement.

To retain the right to participate in the next WC trimester in which a competitor chooses to start, the competitor must maintain 150 IBU qualifying points or less in the current trimester.

1.4.3.4 IBU Qualifying Point Calculations

IBU qualifying points are calculated for each competitor's result in Sprint and Individual competitions at IBU Cup, OECH, WC, WCH and OWG using the following formula:

IBU Qualifying Points = ((athlete's time/winner's time)-1) x Race Factor) + Race Penalty

Definitions: Race Factor: for Sprint and Individual competitions 800

Race Penalty: the sum of the points of the three highest ranked athletes in the top 10 divided by 3.75

The race penalty for all WC, WCH and OWG competitions is zero (0).

1.4.3.5 IBU Qualifying Points List

After each trimester, or at other times as scheduled and announced annually by the IBU EB, the IBU qualifying points list will be updated by taking the average of each competitor's best results from the previous three trimesters according to the following rules:

COMPETITIONS SCORED IN LAST 3 TRIMESTERS	CALCULATION FOR POINTS LIST
3 or more	Average of the best 3
2	Average 2 x 1.10
1	Points earned x 1.2
Removal from list	After 5 trimesters with no points scored

1.4.3.6 Safety at all IBU Events

Athletes who start for the first time at an IBU event must prove that they can safely handle the sports equipment. The RD and/or competition jury may stop individuals from starting or remove them from competition if the competition jury/RD have reason to suspect they cannot safely handle the sports equipment.

1.4.4 Force Majeure/Extraordinary Circumstances

Competitors who are hindered in achieving WC qualification at the WC level due to force majeure and/or extraordinary circumstances may submit a petition to the RD for consideration by the competition jury at that event. A special committee consisting of three members, VP Sport, Race Director and the chairman of the Technical Committee, will determine if the competitor's qualification is to remain valid for the next trimester in which the competitor starts.

1.5 Registration and Entry

1.5.1 Notice of Intent to Participate at IBU Events

There are two separate forms of notification which must be given: registration and entry.

1.5.1.1 Registration, Replacements and Accommodation Reservations

Registration is the early notification of intent to participate. The numbers of competitors and team staff members that may be registered for an event are detailed in the event-specific rules. Registration for events must be done as follows:

a. WCH and Y/JWCH

At the WCH and Y/JWCH, the estimated number of competitors and team staff (registration by number) must be received by the OC two months before the official arrival day for the WCH or Y/JWCH. At least 14 days before the official arrival day of the WCH or Y/JWCH, a list of the names and gender of the intended participants (registration by name) must be received from each NF by the OC. Registered participants may only be replaced before the first team captains' meeting. If the team arrives after the first team captains' meeting, replacements must be announced to the OC, and will become binding, on the arrival day.

b. WC Events

At WC events, the estimated number of biathletes and team staff (registration by number) must be received by the OC one month before the official arrival day for the WC. A list of the names and gender of the intended participants (registration by name) must be received by the OC at least 14 days before the official arrival day of the WC. Replacements and changes to WC registrations may only be made before the first team captains' meeting. If the team arrives after the first team captains' meeting, replacements must be announced to the OC and will become binding on the arrival day.

Athletes who have qualified in the IBU Cup for the WC may only be entered in the WC of the following week or later. Relay competitions are exempt from this rule.

c. OWG

Registration for the OWG must be in compliance with IOC instructions.

d. Other Events

Registration for all other IBU events must be completed at least one month before official arrival day for registration by number, and

at least 14 days before official arrival day for registration by name. Replacements and changes to registrations may only be made before the first team captains' meeting. If the team arrives after the first team captains' meeting, replacements must be announced to the OC and will become binding on the arrival day.

e. NFs not registered in time

NFs that have not registered their team by number and by name by the official deadline may participate if the OC accepts the registration and if it is approved by the RD or – in his absence – the TD.

f. Accommodation reservation

Preliminary accommodation reservations must be submitted to the OC two months before the official arrival day of the WCH/YJWCH, and for all other IBU competitions one month before. Final accommodation reservation must be submitted 14 days before the official arrival day and are then financially binding.

g. Registration of Team Staff

NFs are allowed to register team staff per gender according to the following table:

NUMBER OF REGISTERED ATHLETES	TEAM STAFF QUOTA
1	4
2	5
3	6
4	7
5	8
6	9
7 or more	10

1.5.1.2 All athletes competing in IBU events must possess both sufficient liability insurance, and sufficient accident insurance covering accident, recovery and transport costs - including competition-related risks - to an adequate extent. In addition the NF confirms that its athletes are medically fit to compete at the time of submitting their registration.

All coaches, team staff and officials registered and/or deployed by a national federation to an IBU event must possess both sufficient liability

insurance, and sufficient accident insurance covering accident, recovery and transport costs to an adequate extent.

National federations are responsible for ensuring that their athletes, coaches, team staff and officials registered and deployed by them have the appropriate insurance coverage.

National federations and/or their athletes must be able to furnish proof of the respective insurance coverage at any time upon the request of the IBU, of the IBU's representatives and/or of the organizing committee concerned.

1.5.2 Entry

a. Entry is the notification of an athlete or team being entered to start in a specific competition, and must be submitted in writing by the stated deadline (normally, at least two hours before the draw) for the Individual, Sprint and Super Sprint Qualification competitions at all IBU events. By making an entry, the NF confirms that the competitor will be present and ready to start the competition.

b. At all IBU events, teams must be entered in Relay and Mixed Relay competitions not later than two hours before the team captains' meeting for the competition or the draw, if one takes place. Names of Relay competitors must be submitted in start order by 16:00 hours on the day before the relay. In extraordinary circumstances or if competitions are held in the evening, the deadline for entering competitors will be determined by the RD/TD.

c. Entries in the Pursuit competition are not required, as all competitors who qualify for the Pursuit in the qualifying competition are assumed to be entered. Names of qualified athletes who will not be starting in the Pursuit competition must be reported to the competition office as soon as possible and at the latest by the start of the zeroing.

d. Entries for the Mass Start competition are not required, as qualification is based on current WC total score standings, and at WCH/OWG on previous competitions. Names of athletes qualified for the Mass Start competition must be confirmed by a signed, written form presented to the competition office as soon as possible and at least two hours before the start. The numbers of competitors that may be entered in a competition are stated in the event rules.

e. Entries in the Super Sprint (qualification and final) competition will be based on the information presented in the event invitation. The IBU will define the system of qualification in cooperation with the OC.

f. The OC must provide a current weather forecast 30 minutes before the entry deadline so that the teams have the latest information for preparing their entries.

1.5.3 Registration Procedures

As stated in the invitation, registration must be sent in writing, by post, fax, email or via the online registration system, to the address indicated in the invitation before the deadline. For all IBU events, registration must be performed by the NF. For the OWG, IOC regulations apply.

1.5.4 Late Entries

a. The Race Director (RD)/Technical Delegate (TD) may approve a late entry due to extraordinary circumstances before the draw.

b. The competition jury may approve a late entry after the draw due to force majeure. The competition jury will decide what position(s) the late competitor(s) will start in. A separate draw may be used for this purpose.

1.5.5 Replacement of Entry - Force Majeure

If an entered competitor cannot start due to force majeure, another registered competitor may take his place, but not later than 30 minutes before the competition start time of the Individual, Sprint and Relay competitions.

1.5.6 Replacement of Registered Athletes

The competition jury may allow a team to replace up to two competitors with up to two non-registered competitors such that the team may compete in Relay competitions.

1.6 Draw and Assignment of Start Numbers

1.6.1 General

Competitors or teams will be randomly selected from the entries for the competition, by manual or computer draw, and will be assigned their start numbers based on that draw unless there are other rules applying to that competition.

1.6.1.1 The method of the draw must be approved by the RD /TD.

1.6.2 Time of Draws

The draw for any competition must not be held earlier than 24 hours before the start of the competition. However, in events at which a draw is required for the Mass Start or Relay competitions, the draw for the Mass Start and Relay competitions may be held at the team captains' meeting for the competition which will precede the respective Mass Start or Relay competition in the event program. If the competition jury decides to repeat a competition or to postpone a competition, they will also decide whether a new draw must be made.

1.6.3 Place of Draws

Draws should be held during, and at the location of, the team captains' meetings, and should be visible to all team captains; however, the RD /TD may approve for a draw to be held outside of the team captains' meeting, if it is necessary due to event circumstances. Such outside draws must be supervised by the TD and at least two competition jury members.

1.6.3.1 Normal Assignment of Competitors into Draw Groups

When submitting their entries, team captains must assign one competitor to each of the draw groups. If a team consists of fewer competitors than the number of draw groups, the team captains will decide which groups they will place their competitors in (one in each group chosen). If a team consists of more competitors than the number of draw groups, the extra competitors will be added to the draw groups at the team captain's discretion, one to each group, repeating this procedure until all the team's competitors have been placed.

1.6.4 Normal Draw for Individual and Sprint Competitions

Generally, there are four start groups at all IBU competitions. The starting order will be decided by randomly drawing the names of competitors from the draw groups into which they have been assigned by their team captains and by randomly drawing the start number for each competitor. The draw will be held separately for each group in this sequence: group 1, group 2, group 3, and group 4. If the draw in the Individual or Sprint competition is expected to have 60 or less competitors, the draw will be done in three groups. If there are 40 or less, the draw will be done in two groups following the same principle as for the four draw groups.

1.6.4.1 Start Group System for WC, WCH, OWG, IBU Cup and OECH:

a. At a WC, competitors must be entered in draw groups as described in 1.6.3.1 above. The top-15 ranked competitors from the current WC total score may be placed in any draw group. However, a NF may not place more than three competitors in any one of the four draw groups.

   Additionally, unranked competitors and/or those ranked outside the maximum of top 80 in the current World Cup total score may only be entered in draw groups 3 and 4. For the first World Cup event of the season, the World Cup total score from the previous season will apply. For the remaining World Cup events, the current World Cup total score will apply. In the event that a top-80 ranked competitor from the last year's WC total score does not participate in the first WC, that competitor will have the option of being drawn in groups 1 or 2 in WC 2. In the case of extraordinary conditions, the competition jury may suspend the requirement for unranked competitors and competitors ranked outside the maximum of top 80 to start in groups 3 and 4. This decision must be announced at least two (2) hours prior to the entry deadline for the respective competition.

b. At the OWG and WCH, competitors must be entered in draw groups as described in 1.6.3.1 above. The top-15 ranked competitors from the current WC total score may be placed in any draw group. However, a NF may not place more than three (3) competitors in any one of the four draw groups, including the current world champion/ Olympic champion. Additionally, unranked competitors and/or those ranked outside the maximum of top 80 in the current World Cup total score may only be entered in draw groups 2, 3 and 4. In the case of extraordinary conditions, the competition jury may suspend the requirement for unranked competitors and competitors ranked outside the maximum of top 80 to start in groups 2, 3 and 4. This decision must be announced at least two (2) hours prior to the entry deadline for the respective competition.

c. At the OECH and IBU Cup, competitors must be entered in draw groups as described in 1.6.3.1 above. The top-15 ranked competitors from the current IBU Cup total score may be placed in any draw group. However, a NF may not place more than three competitors in any one of the four draw groups.

1.6.4.2 Draw for Group Starts in Sprint and Individual Competitions

At international events other than the OWG, WCH, Y/JWCH, WC, OECH, and IBU Cup, competitors in Sprint and Individual competitions may start individually or in groups. If the start is held in groups, the draw groups will be divided into start groups. The number of competitors in the start groups will depend on the conditions at the competition venue and on the total number of competitors. Otherwise the draw will be the same as for single starts. For a group start, the numbers drawn will determine the competitors' positions at the start.

1.6.4.3 Assignment of Start Numbers and Start Times in the Pursuit Competition

No draw will be conducted for the Pursuit competition. Competitors will be assigned start numbers and times based on the results of the qualifying competition, which may be an Individual, Sprint or Mass Start competition as stated in the invitation. Competitors in the Pursuit will start in the same order in which they finished the qualifying competition: the winner of the qualifying competition will start first with start number 1; the athlete placed second in the qualifying competition will start second with start number 2, and so on. Start positions will be numbered from right to left, facing the direction of the start. The winner of the qualifying competition will have a start time of zero (0) which will be shown on the start list as the clock time for the start of the Pursuit competition. The remaining competitors in the Pursuit competition will have as their start time the actual time by which they were behind the winner in the Sprint or Mass Start competition or – in the Individual – one half of the time behind the winner, expressed in time behind to the nearest full second. Start lists will be produced based on the foregoing results, and must show which start lane has been assigned to each competitor. If there is a tie for 60th place in the qualifying competition, both of the tied competitors will be allowed to start in the Pursuit.

In all IBU events' pursuit competitions, all competitors whose start times are more than four minutes after the leader's start time will be started simultaneously four minutes after the first start, but their actual competition times will show their times calculated from their actual start times in the qualifying competition.

1.6.4.4 Assignment of Start Numbers and Start Positions Mass Start Competition

A provisional start list will be made within two hours after the last qualifying competition. The start list will be finalized two hours before the start, by which time team captains must have confirmed their starters. Start numbers at WCH and WC events will be assigned according to the applicable event rules. At all other events, if no appropriate ranking list is in force, a single random draw will be used to assign the start numbers for all competitors. There may not be more competitors than the number of targets available. Each competitor's start number will designate their start position in that competition. Start positions will be numbered from right to left, facing the direction of the start.

1.6.5 Assignment of Start Numbers for Relay Competitions

1.6.5.1 Method of Assigning Relay/Mixed Relay/Single Mixed Relay Start Numbers

At OWG, WCH and WC events, no draw will be made for the Relay/Mixed Relay/Single Mixed Relay, and start numbers will be assigned based on the current standings in the WC Relay score, or the sum of the current season's Mixed Relay scores for the Mixed Relay, or the sum of the current season's Single Mixed Relay scores for the Single Mixed Relay – with the top ranking team receiving number 1, the second number 2, and so on. If a team or number is missing, all teams below it will move upward in number. In the first WC Relay, Mixed Relay or Single Mixed Relay of the season, the previous year's respective final Relay standings will be used to set the start numbers. At Y/JWCH and OECH, the previous year's Y/JWCH or OECH Relay/Mixed Relay/Single Mixed Relay results ranking will be used to set the start numbers in the same manner as above. A single random draw will be used for all unranked NFs, and for CC events. The assigned Relay start number will also be each team's start position in the simultaneous start, and their shooting lane number on the range (for the first bout of shooting only). Specific rules for the Relay/Mixed Relay/Single Mixed Relay apply at the IBU Cup.

1.6.5.2 Competitors' Relay Start Positions

Start positions are numbered from right to left, facing the direction of the start. Number 1 is the position furthest to the right and the highest number of the front row is the position furthest to the left. The lowest

number in the second row is placed behind number 1 and the next consecutive number behind number 2, and so on.

1.6.5.3 Extra Relay Teams

Extra relay teams will not be permitted at OWG, WCH, Y/JWCH WC, IBU Cup and OECH competitions. At other events, extra relay teams will be permitted; however, they must start in rows behind the official teams and will not be awarded official prizes. Extra teams may consist of members from more than one NF.

1.7 Team Captains' Meeting

1.7.1 General

At each biathlon event, meetings must be held for the team captains to elect the juries, conduct draws and to pass on information about the event and the competitions. The first meeting must be held at the latest on the day before the first day of official training in order to elect the jury of appeal and the competition jury. In regard to further meetings at the event, the dates and times will be dictated by the time required to conduct the draws. The Competition Chief will chair the meetings.

1.7.2 Attendance at Team Captains' Meetings

The following persons will, if at all possible, attend the team captains' meetings:

- the official IBU EB representative;
- the RD, TD(s) and IRs;
- competition and appeal jury members;
- at least one representative from each participating team;
- the Competition Chief;
- the Chiefs of Range, Course, Timing and Results, Stadium, Logistics, and the Competition Secretary or their representatives;
- the necessary meeting support staff and interpreters, if required.

1.7.3 Team Captains Meeting Agenda

The agenda for a team captains' meeting must include the following items, as appropriate:

- Call to order;
- Roll call of countries (or teams);
- Election of the jury of appeal and competition juries (first meeting);
- Draw(s);
- Technical briefing for the next competition(s);
- RD, and/or TD's comments;
- Weather forecast;
- Miscellaneous;
- Adjournment.

1.7.4 Start lists for the Individual and Sprint competitions should be issued to the teams at the end of the meeting. Start numbers may be given after the meeting or in the competition office.

1.8 Rules for Non-Competing Persons

1.8.1 General

Unfair assistance or assistance not allowed by these rules to competitors during a competition is prohibited.

1.8.2 Specific Rules

1.8.2.1 On the Shooting Range

It is forbidden for any person to give competitors any acoustic or visual information or advice, or to pass on any information to competitors by way of radio or any other communication method on the range including 10 m to the left and right of the range. The forbidden area at the shooting range will be marked by clearly visible markings, including 10 m from the left and right shooting lanes. It is forbidden to pass any information from the shooting butts to the coaches and/or competitors during zeroing and/or the competition. These bans do not apply to the general expressions of applause or disappointment by the spectators.

1.8.2.2 On the Course

Non-competing persons are permitted to run for up to 50 m beside competitors to give them competition information or to offer them beverages. Touching competitors in such a way as to assist their propulsion or to obstruct competitors is forbidden. Assistance to

competitors to change the glide performance of their skis is prohibited during the competition. The stadium area will be marked, and within this area, running beside competitors is forbidden. Additional no-coaching zones may be established on the course by the RD responsible for the event.

1.8.3 Event Behavior

Spectators and other persons must be clearly informed of these rules by the official announcer before the beginning of the competition and warned that a violation of these rules, or any behavior that disrupts the event, may lead to spectators and other persons being removed from the venue by the Organizing Committee.

2. ORGANIZATION BODIES AND APPOINTMENTS

2.1 General

The following organizations and persons are established, elected or appointed to organize, conduct and control biathlon events and competitions:

- Organizing committee;
- Jury of appeal (OWG, WCH, WC, OECH, YJWCH);
- Women's and men's competition juries;
- RD/ TD(s) and IRs;
- IBU EB representative (if applicable);
- IBU medical delegate (if applicable).

2.2 The Organizing Committee

The right to host an event or competition is awarded to NFs as host of the event. The NF must establish an organizing committee (OC) to organize and conduct the event or competition by these rules and the applicable event rules, and it will follow the directives provided in the OC Guidelines about all aspects of hosting an event. In order to be eligible to host an IBU event or competition, NFs must present a site holding a valid IBU site license for the facility for the appropriate event.

2.2.1 Information Bulletins and Invitations

The OC of an IBU event must send the information bulletins and/or the invitation for the event to all IBU NFs by the deadlines stipulated in the event rules, by post, fax, in electronic form by e-mail and/or by placement on a website with notification by e-mail.

The contents of invitations and bulletins are stipulated in the OC Guidelines. Information bulletins and invitations must be approved by the RD /TD.

2.2.2 Medical Services

The organizing committee must appoint an on-venue doctor who will be primarily responsible for the medical care for athletes, coaches, team staff and national federations' officials. Moreover, the on-venue doctor must inform attending team physicians about the local situation and local medical care concept.

The on-venue doctor must confirm, in coordination with the ambulance service and the IBU Race Director and/or Technical Delegate, that the necessary emergency medical equipment & facilities are in place, ready for use, before the training/competition starts.

2.2.3 Insurances

The OC must conclude liability insurance covering both the committee itself and all the OC members. The IBU will in turn provide its employees and the officials (TDs, IBU Referees etc.) it deploys with liability insurance covering the duration of their deployments working for the IBU.

The organizing committee must be in possession of a statement of coverage issued by a recognized insurance company no later than the day before the official arrival day. The statement must be able to be shown to the TD upon request. The insurance must cover sums of at least EUR 5 million.

2.3 The Competition Jury

2.3.1 General

A competition jury will be established at all biathlon events to act as the authority on all matters related to the event that are not specifically designated to be under the jurisdiction of other IBU organs. The competition jury will

be established and operate in accordance with these rules. Generally, a separate competition jury will be established at men's and women's competitions. However, the TD may also form a joint competition jury (e.g. youth men and youth women; youth and junior men, youth and junior women) as needed. The competition jury will decide on issues concerning the event, the competitions and related arrangements, and set conditions to ensure fairness and correct procedures. The competition jury will impose penalties for rule violations reported by the RD/TDs, IRs, competition officials and competition jury members, as well as imposing penalties and disciplinary measures on its own. Additionally, the competition jury will award time adjustments and rule on competition situations not stipulated in these rules or other authoritative IBU publications. The competition jury will also review and decide on all protests submitted to it. The procedures of the competition jury will be governed by the IBU Disciplinary Rules.

2.3.1.1 Time of Election

The competition juries to be established for an event must be elected before the first official training. The competition juries will remain competent throughout the event; however, changes of elected members may be made by election for pressing reasons.

2.3.1.2 Chair

The chairperson of the competition jury will be the TD.

2.3.2 Competition Jury Line-Up

At all IBU events except Continental Championships, Continental Cups, and Regional Cups the competition jury will consist of five members as follows:

a. the IBU TD as chairperson;

b. the Course Referee or one Referee assigned by the IBU;

c. the Competition Chief;

d. Two team officials elected by the team captains from two different NFs.

The RD will be present at all meetings but will not have the right to vote. At the OWG, the RD will serve as Asst. TD.

2.3.2.1 Only one person from one and the same NF or with the same nationality may be a member of a competition jury at the OWG and all IBU events except CCH and CC.

2.3.2.2 At other international competitions, the composition of the competition jury will be decided by the OC and the team captains of the participating federations.

2.3.3 Election of Competition Jury Members

Election of the competition juries will be conducted by the TD during the team captains' meeting. Candidates may be nominated by the TD or team captains. If there are the same numbers of candidates as open competition jury positions, no vote will be necessary and the candidates will become competition jury members by consensus. If there are more candidates than open competition jury positions, the team captains must take a vote. Only one vote will be allowed per NF. A simple majority will elect a competition jury member. If no simple majority is obtained by any candidate, the person with the least votes will be removed as a candidate and the vote will be repeated for the remaining candidates until the competition jury members have been elected.

2.3.4 Competition Jury Meetings and Decisions

The competition jury must be able to convene within a minimum of time whenever a meeting is required, as directed by the competition jury chairperson, and must remain readily available for competition jury duties for 15 minutes after the provisional results have been published. Specific meeting times are detailed in Annex B to these rules. Decisions of the competition jury will normally be made with all members present. However, in exceptional cases the competition jury will be competent to pass a resolution if at least three members are present. The competition jury chair will only vote in case of a tie vote. Decisions will be made by each member voting on the issue and a simple majority will decide.

2.3.5 Duties of the Competition Jury

A detailed list of duties of the competition jury is given in Annex B to these rules.

2.3.6 Appeals against Competition Jury Decisions

An appeal may be made against penalties and disciplinary measures imposed by the competition jury at events where a jury of appeal has been established. In any other events an appeal can be lodged to the IBU Executive Board in writing within 24 hours after the decision of the competition jury.

The appeal must be made to the jury of appeal or Executive Board, and be put forward in accordance with the IBU Disciplinary Rules.

2.4 Race Directors

2.4.1 The Race Directors are officials appointed by the IBU.

2.4.2 The RD will conduct the necessary inspections and meetings with the OC to ensure proper preparations, or delegate this responsibility to the TD.

2.5 Technical Delegates

2.5.1 General Regulations

TDs will be appointed by the IBU TC and will work under the guidance of the RD. In the absence of the RD, the TD will assume the RD's duties.

2.5.2 Appointment of TDs

TDs will be appointed by the IBU TC from among its members or from the TD group at least three years prior to OWG, two years prior to WCH and in the season before for all other IBU events, and may not be from the host NF. However, TDs for CCH, CC and RC events may be IBU IRs from the host NF, except at OECH. Two TDs will be appointed for the OWG, one as an assistant TD. For all other events, one TD will be appointed. TDs for IBU Junior Cup & Junior OECH events may be from the host NF.

2.5.2.1 The TD will be chairperson of the competition jury or juries for the event for which he has been appointed. At OWG, the assistant TD will be a member of both the men's and women's competition juries.

2.5.2.2 TD's functions only apply for the event for which they have been appointed.

2.5.3 Tasks and Duties of TDs

The TD must arrive at the event site in sufficient time before the event and must perform all the necessary functions required by these rules and the circumstances at the venue before, during and after the event. The TD will be responsible for directing the IRs during the event. Detailed tasks and duties of TDs are given in Annex B to these rules.

2.5.4 TD Expenses

OCs of IBU events and competitions are responsible for paying the TDs' travel, accommodation and meal expenses for the period of the TDs' duty, and daily allowance as stipulated by the IBU regulations in force at the time.

2.6 IBU Referees

2.6.1 General Regulations

IBU Referees are persons who are appointed by the IBU TC to officiate at IBU events. They are responsible for the correct performance of duties and tasks related to their area of responsibility, in cooperation with the competition committee. In addition, IBU Rs will be required to direct, advise and assist other competition officials in their duties, and to intervene to prevent mistakes from being made. The IBU Rs at an event will be subordinate to the TD, report to him on the performance of their duties and must follow his directions.

2.6.2 Appointment of IBU Referees

IBU Referees appointed by the TC for the OWG, WCH, Y/JWCH, WC, and OECH must hold a valid TD license. IBU Rs for other events may be appointed by the respective NF or OC and must also hold a valid IR license. At the IBU Cup, the Course and Materials Inspection IBU Referees must be from the TD Group and at least one of them must not be from the host country.

At OWG, WCH, WC, OECH and Y/JWCH, all appointed IBU Referees must be from outside the host country and members of the TD Group. At CCH and CC, all IBU Referees may be from the host country. However, exceptions may be permitted by the TC provided the person has held a valid IR license for at least four years.

2.6.3 IBU Referee Functions at Competitions

The functional areas where IBU Referees will be appointed at competitions will be:

- start/finish;
- shooting range;
- course;
- materials inspection.

2.6.4 Numbers of IBU Referees for Events

The following numbers of IBU Referees will be appointed for events:

a. OWG 8 (all appointed by the IBU)
b. WCH 4 (all appointed by the IBU)
c. Y/JWCH 4 (all appointed by the IBU)
d. WC 4 (all appointed by the IBU)
e. IBU Cup 4 (2 IBU Referees appointed by the IBU, 2 by the NF)
f. OECH 4 (all appointed by the IBU)
g. CCH 4 (all appointed by NF)
h. CC 4 (all appointed by NF)
i. IBU Junior Cup 4 (all appointed by NF)

2.6.5 IBU Referees Tasks and Duties

Detailed tasks and duties of IBU Rs (IRs) are given in Annex B to these rules.

2.6.6 IBU Referees Expenses

OCs of events and competitions will be responsible for paying the IBU Referees travel, accommodation and meal expenses and daily allowance as stipulated by the IBU regulations in force at the time for the period of the IBU Referees appointment.

3. COMPETITION VENUES AND FACILITIES

3.1 General

The competition venue is the site on which biathlon competitions and training are conducted, and consists of the stadium area, courses and the associated technical and spectator areas. Located in the stadium area are the start/finish areas, shooting range, penalty loop, Relay hand-over zone and spectator areas. The technical areas are near the stadium and consist of the ski test area, team waxing huts, team lounge, athlete changing area, and parking spaces, as well as the buildings and offices necessary for the OC. The venue must be technically suitable, according to these rules, to allow all the types of biathlon competitions to be held, and must offer the best possible viewing of the competitions to spectators, and fulfill all

the requirements of TV coverage. Venues that are candidates for hosting the WCH and WC must have an IBU A license, and venues for Y/JWCH, OECH, IBU Cup and SB WCH events must have an IBU B license. Venues for OWG must acquire an IBU A license.

3.1.1 General Requirements

The start and finish areas, shooting range, penalty loop and Relay hand-over zone must be located on level ground and close together, so as to provide the majority of the spectators with a good view of competition activities. These areas and critical parts of the course must be fenced off in order to prevent competitors from being impeded or going astray, and to prevent access by unauthorized persons. However, the height and extent of the fencing must be minimized as much as possible to avoid interference with TV coverage. There must be sufficient space for competitors and competition officials to conduct their required activities and adequate room for team support staff, press, photographers and spectators, and enough space for TV camera crews and their broadcasting facilities without the broadcasting interfering with the competition. Diagrams of examples of facility lay-outs are given in the OC Guidelines.

3.1.1.1 Maximum Distance and Altitude Difference

The competition venue for the OWGs and WCH will be no more than 30 km or 30 minutes' travel and should not be more than +/- 300 m in altitude from the teams' living accommodation, unless otherwise approved by the IBU EB.

3.1.1.2 Competition Office

A competition office or sub-office must be located in or near the stadium area. The office must be open during regular hours during the entire event, beginning on the arrival day, and will be the official interface between teams and the organizing committee. Teams must be able to submit entries for competitions at the office and information about the event and competitions must be available in the office. A mailbox for each participating team must be provided in the office or close to it.

3.1.1.3 Electronic Information Board

At OWG, WCH, Y/JWCH, OECH and WC there must be an electronic information board with at least six lines, in the stadium area, in a location as approved in the licensing process or by the RD.

3.1.2 Artificial Lighting

IBU competitions may be held under artificial lighting when approved by the EB as part of a given program. Under exceptional circumstances, the competition jury may authorize a competition to be held under artificial lighting. In any case, the lighting must meet the following standards:

- Lighting conditions must be the same for all competitors with a minimum of approximately 300 lux across the entire length of the course and stadium, without any dark areas. 1000 lux are required on the finish line, targets and zeroing paper targets without any shadows.
- If TV is involved, the light conditions must satisfy TV requirements and be at least 1000 lux in the stadium.

3.2 Start and Warm-Up Areas

3.2.1 General

The start area for all competitions must be level with the snow well packed and smoothly groomed, and should be visible to spectators. The start must be placed at right angles to the skiing direction and must be marked with a red line sunken into the snow, except where an electronic start gate is in use. The area must be well fenced-off and must be suitable to cope with the traffic flow of competitors, team support staff and officials without problems. There must be a warm-up area immediately adjacent to the start zone for competitors to perform their final, pre-competition warm-up, with enough room to store warm-up clothing, and space for a minimum of 20 rifle racks able to hold at least seven rifles each, or as otherwise directed by the RD /TD.

3.2.2 Individual and Sprint Competition Start Areas

The start area for Individual and Sprint competitions must be approximately 8-10 m long and a minimum of 2 m wide and must be separated from the warm-up area by a fence with an opening to allow controlled access to the area.

3.2.3 Pursuit Competition Start Area

The start area for the Pursuit competition must have a minimum of four start lanes. The actual number of start lanes will be determined by the number of simultaneous starts in the start list – if there are five starts in the

same second, there must be five start lanes, etc. The start lanes must be numbered from the competitors' right to left, 1.5-2 m wide and sufficiently long to hold the required number of competitors. A common start line must cross the end of the start lanes. The lanes must be parallel to each other and must be clearly separated. There must be a separate passage or lane that allows access across the start line in the case of late starts. This lane must be supervised by a start official. At the OWG, WCH, YJWCH, WC, OECH, IBU Cup, and Junior IBU Cup, a transponder timing point must be installed 1.5 m after the start line with a video camera installed to capture the relative start time of each competitor in case of early start.

3.2.3.1 Pursuit Start Boards

Separate boards, showing the start numbers and start times for each lane in large print easily readable by competitors and officials, must be positioned in front of the applicable start lanes and at the start line, on the competitor's left such that the start line can be easily seen from the front for control of each starter.

3.2.4 All Relays, Group, Mass Start and Super Sprint Competition Start Area

The start area must be laid out with three corridors 3 m wide groomed flat, with 3 m of space between each competitor.

3.2.4.1 Start Position Markings and Boards – All Relays/Mixed Relays, Group, Mass Start and Super Sprint Competition

The start positions must be marked with nylon or natural markers. There must be the same number of markers as the number of starters in the competition. The size of the start number boards must be 20 x 20 cm. Normally, the number boards must be placed on the right of each line of starters, unless specified differently by the RD/TD, and the number must be readable from the front and the rear. The numbers on the boards must be at least 10 cm high and must be highly visible to the competitors and TV. The start lanes must be numbered from the competitors' right to left.

3.2.5 Course Information Boards

There must be a board at the entrance to the start area that shows the course map for the competition.

3.2.6 Start Clocks

At the start area for Individual and Sprint competitions, there must be a start clock placed so that it is easily readable from the start line. The display of the clock and the sound signal must be synchronized. For the Pursuit competitions, there must be a start clock on the left and right side of the start. In addition, there must be a clock in or near the start area that is easily visible to competitors in the area and that displays the correct time of day.

3.2.7 Equipment/Materials Inspection Prior to Start

The equipment/materials inspection prior to the start must be located in close proximity to the start area. Its placement and design must facilitate the smooth, orderly and timely flow of competitors through to the start. The inspection station must have tables and the required equipment and materials to perform the checks.

3.3 Course and Associated Sections

3.3.1 General

The course is the network of ski trails to be used for the competition. It consists of continuously changing flats, climbs and downhill sections. Extremely long and difficult climbs, dangerous descents and monotonous flats are not permitted. Changes in direction of the course must not occur so frequently that a competitor's ski rhythm is seriously disturbed. Detailed course specifications are given under 1.3.10 in Table 1.

3.3.1.1 TV Zones

Zones for TV coverage of the competitions will be established on the course by the RD responsible for the event. The primary purpose of the zones is to ensure the best possible media coverage of the competition and in particular to prevent non-competing persons from obstructing the TV broadcast.

3.3.2 Altitude, Width, Gradient and Length

The maximum altitude of any part of the course may not be higher than 1,800 m above sea level, unless an exception is specifically authorized by the IBU EB in necessary circumstances. For all IBU events, the course must have a minimum width of 6 m of groomed snow surface for the

competitors plus additional space for coaches and TV. In steep sections of the course, the trail must be even wider, up to 8 m. If narrower sections such as bridges or mountain passes are unavoidable, the narrow parts may not be less than 4 m wide for not longer than 50 m. The actual length of the course may not be more than 2% shorter or 5% longer than the length specified for the competition, as measured in the center of the course. The maximum grade for all climbs on the competition course must not exceed 25 percent.

3.3.3 Setting of Tracks

If required, tracks will also be laid in downhill sections as directed by the RD. Tracks must not be set in such a way or in places where they may endanger or hinder competitors. The width and depth of tracks must be set so that all regular types of boots and bindings can be used without side friction. For training days, tracks for classic skiing must be provided at the edge of the competition course.

3.3.4 Safety

The course must be prepared so that a competitor may ski it at full speed without undue risk of an accident. To improve the safety of the competitions, the competition jury may alter the first loop of a Mass Start, Pursuit or Relay competition, even if this means that the course will not meet the distance or climb requirements.

3.3.5 Grooming

The course must be as level as possible, solidly packed and smoothly groomed. Downhill turns must be banked as necessary. All types of hindrances and obstacles must be cleared from the course, such as stumps, branches, stones and soil. Overhanging or protruding branches must be trimmed so that they do not obstruct or endanger competitors.

3.3.6 Marking

The course must be so clearly marked and defined so that competitors are at no time in doubt as to how to follow the course. This applies especially to descents, trail junctions and other critical points. Clear markings must be placed at such points. Closed sections of the course or junctions must be completely closed with continuous V-boards or fences.

3.3.6.1 Course Sequence Colors

The 1.5 km course must be marked orange; the 2 km course must be marked red, the 2.5 km course green, the 3 km course yellow, the 3.3 km course blue and the 4 km course brown. Junctions must be clearly marked with course colors.

3.3.7 Fencing and V-boards

All trails that will not be used in the competition must be closed. Trails close to each other must be separated by fences or V-boards so that competitors cannot go on the wrong trail. V-boards should be clearly visible, approximately 20 cm high and approximately 1 m long, and made of heavy material that will not be blown over by the wind.

3.3.8 Forerunners

The RD, TD and IR Course will decide whether to use forerunners or not.

3.3.9 Course Specifications for Competitions

Table 1 under 1.3.10 details the required technical specifications for courses for each type of competition.

3.3.10 Relay Hand-Over Zone

In Relay competitions there must be a well-marked hand-over zone, 30 m long and 9 m wide, at the end of a straight trail section placed in such a way that incoming competitors will arrive at a controlled speed. The last 50 m of the trail before the zone must be at least 9 m wide. The hand-over zone must begin at the timing line or at least close to it. The beginning and end of the zone must be marked with a 1 m-long red line on the right and left side and with signs "Hand-over Start" and "Hand-over End". The zone must be closed with v-boards or a fence along both sides, with one access gate for controlled entry by starting competitors.

3.3.10.1 The last 50 m of the course before the hand-over zone must be straight. The hand-over zone may only be entered by the incoming and outgoing competitors and by the officials responsible for supervising the hand-over zone.

3.3.11 The Penalty Loop

For the Sprint, Pursuit, Mass Start and Relay competitions, a penalty loop must be set up immediately after the shooting range – no further than 60

m skiing distance from the right edge of the range to the entrance of the penalty loop. The loop should be an oval trail which is 6 m wide and 150 m (+/- 5 m) long, measured along the inside perimeter of the loop. The opening must be at least 15 m long. The penalty loop must be marked off with V-boards, set up so close together that competitors have no chance of mistaking the entrance/exit.

3.3.11.1 The penalty loop must be located in a level area in such a way that competitors do not have to ski any additional distance between the course and the penalty loop when they have to enter the penalty loop.

3.3.12 Warm-up Course

For all IBU events there must be a separate course, in close proximity (approximately 300 m) to the start area and with easy access from the team huts, on which competitors can warm up. The course must have a minimum length of 400 m and must be prepared the same as the competition course, but must not be a part of the competition course. A warm-up course should also be in place for all other events.

3.4 Shooting Range

3.4.1 General

The shooting range is where all shooting takes place during a biathlon competition. It must be located in the central area of the stadium and both the targets and the shooting ramp must be visible to the majority of spectators. The range must be flat and level and must be surrounded by adequate safety berms on the sides and behind the targets in accordance with the applicable national safety rules. The shooting range must be set up and placed with strict regard for safety in relation to the trails, stadium and the surrounding area. The shooting direction should generally be northward, with consideration for the light conditions during competitions. Safety baffles that obstruct visibility of the competition to spectators or TV should be avoided if at all possible. The shooting range must conform to all local laws.

3.4.2 Specifications and Configurations

3.4.2.1 Shooting Distance

The distance between the front edge of the shooting ramp (firing-line) and the line of targets must be 50 m +/- 1 m.

3.4.2.2 Prone and Standing

Looking in the shooting direction, the right half of the range will be for shooting in the prone position and the left half for shooting in the standing position. The division must be clearly indicated to the competitors by sign boards. An exception to the right and left configuration is to be made during Pursuit, Mass Start and Relay competitions, when competitors fire from all lanes in both prone and standing positions.

3.4.2.3 Entrance and Exit

During both training and competition, competitors must enter the range from the left and exit on the right side.

3.4.2.4 Levels

The surface of the shooting ramp and the surface on which the targets are situated must be as near the same level as possible. The shooting ramp and the surface on which the targets are placed must be at a higher level than the ground between them by at least 30 cm, and more if required by local snow conditions.

3.4.2.5 Range Area Configuration

At the rear of the range there must be a fenced off area of 10 to 12 m width (shooting ramp), measured back from the front edge of the firing line, and extending along the entire back of the range. The area is to be reserved for competitors, officials and members of the juries. However, if authorized by the RD/TD, other persons such as TV camera crews may be allowed in this area. Directly behind that area there must be a second fenced area of at least 2 m in width and at least 30 cm higher than the shooting ramp reserved for three team staff members per team. This area must be configured so that the team staff members have good visibility of the targets and the shooting ramp area. Behind the coaches area there must be an area 1.5 m wide, extending the width of the range, reserved primarily for the media.

3.4.3 The Shooting Ramp

The shooting ramp is the area at the rear of the range where the competitors lie or stand to fire. The ramp must be totally solid, even, smooth, and level for the entire area used by competitors during the competition.

3.4.3.1 Shooting Lanes

The shooting ramp is divided into shooting lanes from which one competitor at a time will shoot. Every shooting lane must be at least 2.75 m but not more than 3 m wide. The width of the lanes must be marked on both sides of the shooting ramp from the front edge for a distance of 1.5 m to the rear with a red-colored board sunken into the snow so that it is 2 cm below the snow surface. Both sides of each lane must be marked from the ramp to the targets with five (5) T-posts with sign boards max. 20 cm wide by 15 cm high, in alternating colors matching the background color of the target numbers that clearly define the lanes but do not interfere with shooting. The first line of T-posts should begin at 10 m. There must be a minimum distance of 3 -5 m between the outer edge of the left and right lanes and the start of the safety berms they adjoin. This distance must be maintained from the ramp to the targets.

3.4.3.2 Shooting Mats

For shooting in both the prone and standing positions, mats must be placed with the front edge on the firing line and in the middle of shooting lane. For all IBU events, the mats must be 200 cm x 150 cm and 1 to 2 cm thick, and must be made of synthetic or natural fibers with a non-slip surface. The shooting mats must be marked with a 5 cm-wide line 50 cm from the firing line to help the competitors assume the correct shooting position.

3.4.4 Targets

3.4.4.1 Types of Targets

There are two main kinds of targets used in biathlon – metal and paper. Only metal targets are permitted to be used for competition and only paper targets will be used for rifle zeroing. Both paper and metal targets may be used for training. Only targets that are in conformity with the IBU Materials Catalogue (Annex A) may be used for IBU competitions. At all IBU competitions, the shooting range must have 30 shooting lanes and targets of the same type/model. The targets used for OWG, WCH, WC, and all other events with live TV/webcasting coverage must have a remote reset capability (without rope) and electronic target scoring data.

3.4.4.2 Target Maintenance

Targets must be maintained, set and adjusted according to the manufacturer's instructions.

3.4.4.3 Target Placement

The targets must be set up in a level straight line, parallel to the front edge of the shooting ramp. They must be level in all directions. The targets must be placed so that the target is in the middle of the width of the lane. The targets must not deviate sideways more than 1 degree from the right angle plane of their shooting lanes. The target center must be 80 to 100 cm higher than the surface of the shooting ramp.

3.4.4.4 Target Background

The background behind the targets must be white from the ground level to a min. of 50 cm above the upper edge of the target, including all constructions in this area.

3.4.5 Numbering and Markings

The shooting lanes and the corresponding target numbers must each have the same number, easily visible, and beginning from the right with number 1. At all IBU events the shooting lanes must be numbered on the left and right side at the front edge of the shooting ramp. The number signs at the shooting ramp must be placed so that they do not obstruct TV coverage of the shooting competitors. They must be 30 cm high and 20-25 cm wide. The printed number must be located at the bottom of the sign and be 18-20 cm high with the lines of the numbers 2-3 cm in width. The signs must be mounted on a support post 1-2 cm thick and 40 cm high – measured from the snow surface to the bottom of the number sign. The number must be placed not more than 30 cm from the firing line in the direction of the targets. The size of the target numbers must be 40 cm high with a line width of 4 cm, and they must be mounted on a board 45 x 45 cm centered immediately above the targets. Both the target and shooting lane number signs must be in alternating colors – black on yellow and yellow on black – starting at number 1 with black on yellow and matching the T-post lane markers, or in other contrasting colors as decided by the IBU.

3.4.5.1 Entrance and Exit Boundaries

At the entrance and exit of the range, 10 m outward from the left and right hand shooting lanes, there must be a clear marking. These markings will indicate the outer edges of the information prohibition zone at the range.

3.4.6 Wind Flags

At competitions and official training, wind flags must be installed at the side of every second shooting lane beginning at the right side of lane 1, at 5 m from the shooting ramp and 20 m from the target. The flags must be placed so that the top edge of the flag is at the same level as the bottom edge of the targets and cannot obstruct a direct line of sight to the targets.

3.4.7 Rifle Racks

During competitions there must be racks for two reserve rifles for each participating team. The racks must be clearly marked with the names of the participating nations or teams. A minimum of one rifle rack must be provided per shooting lane in use for training or zeroing, holding seven rifles each. Before and/or after the range there must be an adequate number of racks for training.

3.4.8 Video Cameras on Range

At all IBU competitions, video cameras must be installed on the shooting range in sufficient number so that the placement and number of cameras totally covers and records all actions of all competitors on the range.

3.5 Finish Area

3.5.1 General

The finish zone begins on the competition trail at the finish line and ends at the finish equipment/materials and clothing inspection point. It must be at least 30 m long and 9 m wide without obstruction. The last 50 m before the finish line must be straight and 9 m wide, and divided into three equal lanes with markers that do not interfere with skis. Only officials, finishing competitors and specially authorized TV personnel under supervision of the Start/Finish IR are permitted in the finish zone. Space must be provided for the finish line timing equipment, installations/markings/advertising and broadcast equipment, such as rail cameras etc., as specified for each IBU Event.

3.5.1.1 The finish line must be marked by a sunken red line in the snow at a right angle to the incoming trail and clearly visible to the competitors and broadcasters' cameras.

3.5.2 Finish Equipment/Materials Inspection

The finish equipment/materials inspection must be located so that finishing competitors flow into it automatically and can pass through it under supervision. This is particularly important for Relay competitions so that finished competitors do not obstruct the outgoing trail from the hand-over zone. The finish zone fencing and placement must be set up so that competitors are automatically led into, and have no way of evading, the finish equipment/materials inspection.

3.5.3 Media Area

Adjacent to the finish zone and equipment inspection area, a fenced-off area (mixed zone) has to be established for TV company representatives, journalists and photographers to have close contact with the competitors for interviews and pictures after they finish.

3.5.4 Refreshment Point

There must be a refreshment point after the finish zone, the location of which must be agreed with the RD/TD, for serving drinks and providing paper tissues and similar necessary services to competitors after they finish. Any beverages or foodstuffs provided there must be protected against the introduction of any prohibited substances.

3.5.5 Clothing Change Shelter

Adjacent to the finish zone, there must be a shelter providing privacy where competitors can change their clothing. The size of this shelter must be approximately 2 x 3 m.

3.5.6 Finish Exit Zone

After the mixed zone, there must be an area where competitors can meet their team staff and service firms, and retrieve their clothing and materials/equipment. There must be ten rifle racks holding at least seven rifles each.

3.6 Team Waxing Cabins and Team Parking Areas

In or very near the stadium area, there must be a sufficient number of permanent buildings or good quality temporary facilities in which teams may store materials/equipment and wax skis. The cabins must be provided with lights, electric power outlets and adequate ventilation for removing wax fumes, and must be warmed to at least 20 degrees Celsius.

Each NF with a total number of competitors entered to start (men's and women's classes) of four to nine must have its own wax cabin, whilst NFs with a total of ten or more competitors entered to start must be given two wax cabins or one very large cabin.

Smaller teams may have to share a cabin if work-space and security regulations permit. The cabins should be equipped with locking doors and teams are to be issued with corresponding keys. If the entrances cannot be locked, the OC must provide security for the cabins. Parking space for team vehicles and ski preparation trucks must be provided within a reasonable distance of the cabins.

3.7 Competitor Changing Rooms

Rooms or separate containers must be provided near the waxing cabins as changing areas for the competitors. This can be a part of the stadium building, a separate warming shelter or a tent.

4. COMPETITION EQUIPMENT AND CLOTHING FOR EVENTS

4.1 General Rules

The term "competition materials/equipment and clothing" includes all of the materials, equipment, competition gear and clothing that the competitor uses during an event, including advertising. The definitions and specifications of competition materials/equipment and clothing, and advertising, are stipulated in the IBU Materials Catalogue (Annex A) and the IBU Rules for Advertising.

4.2 Inspections of Equipment/Materials and Clothing

4.2.1 Preliminary Control

Competitors' materials/equipment and clothing must be inspected before the start and after the finish of a competition. Additionally, a preliminary materials/equipment and clothing check is to be provided well in advance of a competition to ensure that no problems occur. All registered competitors must have their equipment controlled when they first arrive for an IBU event series or after making any changes to their materials/equipment or clothing. No equipment, materials or clothing may be used at an IBU event unless they have been approved by the IBU.

4.2.2 Pre-Start Materials/Equipment and Clothing Inspection

Competitors must report at the start materials/equipment and clothing inspection area not later than 15 minutes prior to their scheduled time of start to have their skis and rifle checked and marked, and their clothing inspected. Competitors who arrive later than 15 minutes before their start are responsible for the time that it takes to make the inspection/markings, even if this results in a late start. Competitors whose materials, equipment or clothing do not conform to IBU regulations will not be authorized to pass through the start materials/equipment and clothing inspection until the discrepancies have been corrected. Equipment, rifles, materials and clothing that have been inspected and marked at pre-start equipment inspection must not be modified in any way prohibited by these rules or the IBU Materials Catalogue. In no case does the foregoing relieve competitors of their responsibility to abide by Art. 1.4.2. Team reserve rifles – maximum two per team – are to be brought to the materials/equipment and clothing checkpoint for inspection and marking, and then must be taken directly to the range and deposited in the reserve rifle racks before the first start. The range staff will not permit rifles to be deposited after this time. To facilitate the inspection of the reserve rifles, the materials/equipment and clothing checkpoint must be opened at least 15 minutes before the start of zeroing and the competitors will have the right to have their rifles checked from that time onwards. The early opening of the pre-start equipment inspection will be permitted and encouraged at all competitions in order to avoid time difficulties.

4.2.2.1 Specific Checks at Pre-Start Equipment Inspection

The following checks are to be made:

a. That competitors are wearing their start number and thigh numbers;

b. The rifle will then be safety-checked to confirm it does not contain a live cartridge in the chamber or in its inserted magazine;

c. The weight, trigger resistance, dimensions and shape of the rifle, and the advertising on it will be checked for correctness. The rifle will be marked with a small sticker affixed to the top front end part of the stock that must be clearly visible to officials at the start and finish, and the serial number will be recorded on a check list so that the rifle can be verified at the finish in case the sticker falls off;

d. Skis and poles will be checked for correctness;

e. Clothing and other materials/equipment will be inspected for correctness, including advertising.

4.2.2.2 Markings

Equipment will be marked to prevent unauthorized changes of equipment during the competition by using another competitor's start number. Both skis and rifles will be marked. In Individual, Sprint, Pursuit and Mass Start competitions, only one color will be used to mark the skis. The equipment will be marked with a colored marker pen or stamp, and will be unique for that competition. In Relay competitions, the skis must be marked according to the team start numbers and the colors or numbers of the start sequence within the team. Rifle inspection stickers must be placed on the top front end part of the stock.

4.2.2.3 Delays Before Start

Competitors are themselves responsible if they are delayed in starting because they have reported late to the equipment inspection area, or because of corrections that have to be made to their clothing or equipment. The OC must provide sufficient staff to ensure prompt equipment inspections and thus prevent competitors who have reported in time from starting late.

4.2.2.4 Final Check Before Start

Two minutes prior to the start, a check will be made of the competitor by the starter's assistant(s) in order to ensure the following:

a. That the competitor is wearing a start number and thigh numbers;

b. That the skis and rifle are properly marked;

c. That advertising regulations are not being violated;

d. That by opening and closing the action of the rifles, that there is no round in the chamber or the inserted magazine;

e. That the competitor has transponders if they are in use;

f. That the competitor is not in possession of any wireless communication/ listening device.

g. That the competitor has enough magazines and ammunition to complete the competition. Magazines may be spot-checked to ensure they contain only five rounds that can be loaded directly from the magazine.

However, this check does not relieve competitors of their responsibility to abide by Art. 1.4.2.

4.2.3 Finish Inspection

After arriving at the finish, and after the handover zone in the Relay competition, a check will be made to confirm the following:

a. That the rifles do not contain live ammunition in the chamber or inserted magazine;

b. That competitors have finished with at least one marked ski and their marked rifle, with their skis and poles being in accordance with the Materials Catalogue;

c. That the rifle trigger resistance is at least 0.5 kg (may be conducted as a spot check, if authorized by the RD/ TD);

d. That the advertising regulations have not been violated.

All ammunition on the stock and in other magazines will be removed at this inspection.

4.2.4 Preliminary Examination of Materials/Equipment and Clothing

At all IBU events, the RD/ TD, and IR for Materials Inspection will conduct a preliminary inspection of equipment to confirm that the materials, equipment and clothing to be used by teams are permitted by the rules. The check will normally be done at least two days before the first competition. The preliminary examination does not relieve competitors of the obligation to pass equipment inspection at the start and finish.

4.2.4.1 Attendance

The examination will be conducted by the responsible organizing committee staff. The IR for Materials Inspection must also be in attendance. The examination is mandatory. Competitors or teams who are not present at the first WC or IBU Cup or who have changed their competition equipment or clothing must make this inspection prior to their first start of the season.

5. TRAINING AND ZEROING

5.1 General

Competitors and team staff must be provided the opportunity and the facilities to prepare for the competitions. For that purpose the OC must set official training times, provide ski testing facilities, and offer the opportunity for competitors to zero rifles and warm-up prior to the competition.

5.1.1 Exceptions

In extraordinary circumstances, the competition jury may close the entire facility or limit training on the facility to certain parts or to specific times.

5.1.2 Rights for Training and Training Bibs

Competitors who have registered for an IBU event may use the course during the official training. Men or women may not participate in official training and zeroing of the respective other gender; however, the RD/TD is authorized to permit mixed training on competition days when this is in the best interest of the competitors and the OCs. The training bibs assigned by the IBU, if in use at the event, must be worn only by the assigned competitors during all training, and by the assigned team staff and service firm personnel skiing on the course at any time during the event. At IBU events bibs may not be transferred to other persons.

5.1.3 Types of Training

"Official training" is the period of time that the OC must provide for training on the facility. The facility must be prepared the same as for the competition. "Training" is the time that the OC allows for training on the facility in addition to official training, when the facility does not have to be prepared as for the competition. OCs should allow as much time as is

possible in the event program for training – if necessary, shooting lanes will be allocated for teams as for official training, as directed by the TD.

5.2 Official Training

At all IBU events, the competition facility and courses must be open for inspection and official training at least once before the first competition. The facilities and courses must be prepared as for the competition and the training must be held at the same time of day as the competition itself, if at all possible. The RD/TD may order classic skiing tracks to be prepared on the side of the course for training purposes. Each subsequent competition should also be preceded by official training unless it is not possible in the event program or due to other circumstances. At all IBU events, ranges will be allocated for training according to Art. 5.3.3.1 unless specifically changed by the RD/TD. At all other events a simple draw should be done.

After 20 minutes, the top paper targets will be changed and metal and paper targets will be used. Athletes are now free to choose any available shooting lane they wish until the end of the training period; however, the paper targets will be reserved for the assigned NF(s) for a further 25 minutes. When the metal targets are opened for Mass Start, Relays and Pursuit official training, the odd-numbered shooting lanes will be set to prone and the even-numbered lanes will be set to standing.

5.3 Rifle Zeroing

5.3.1 Zeroing Time

Prior to the start of a competition, competitors must be given the opportunity to zero their rifles on paper targets at the shooting range for a period of 45 minutes, which must begin one hour before and end no later than 5 minutes before the first start. At IBU events, the zeroing time for the Pursuit, Mass Start and Relay competitions is 30 minutes long and must end 15 minutes before the start, without any paper target change. If necessary, men and women may both zero prior to the first competition, but this must be done separately.

5.3.2 Paper targets used for zeroing must be placed at the same level and the same distance (+/- 20 cm) from the shooting lane as the competition targets. When two rows of paper targets are placed, the second row must

be below the level of the competition targets. If the paper targets have to be changed during zeroing, they will be changed after 20 minutes and only the top row of paper targets will be changed. The time required for the change will not be deducted from the time allocated for zeroing. Metal Targets may not be used for zeroing.

5.3.3 Allocation of Zeroing Lanes

At Individual and Sprint competitions, each team should be allocated one zeroing lane on the range. Lanes will be allocated by random draw conducted under supervision of the RD/TD. At Relay competitions, the team zeroing lane is to be the same as the start number. At Mass Start competitions, the zeroing lane will be allocated according to the start list, but the competitors will be free to zero from any lane allocated to a member of their NF. At Pursuit competitions, the shooting lane numbers will be allocated according to the placement of the best ranked competitor in each team, but if a NF has more than four competitors starting, it will be allocated two adjoining zeroing lanes. One reserve member of each team will be permitted to zero before each competition, including the reserve Relay team member, except for at Pursuit and Mass Start competitions. Prior to the start of the Super Sprint final competition, competitors must be given the opportunity to zero their rifles on the range for a period of 15 minutes; zeroing must begin at least 25 minutes before and end no later than 10 minutes before the first start. If necessary, men and women may both be zeroed prior to the first Super Sprint final competition but this must be done separately.

5.3.3.1 At the OWG, WCH, WC, and Y/JWCH events, shooting lanes 1-5 will be allocated by random draw among the top 5 participating NFs, and shooting lanes 6-10 allocated among the next five participating NFs, and so on with the next five targets drawn for the next five ranked NFs until all are drawn. The previous year's Nations Cup score will apply in the first trimester, thereafter the current Nations Cup score will apply. Likewise for the IBU Cup/OECH: the IBU Cup Nations Cup score will be used.

5.3.3.2 When a team has more than eight competitors, an additional zeroing lane may be allocated if available.

5.4 Use of the Course before the Start

At all IBU events, the course will be open for entered competitors and team staff to warm up and test skis starting not earlier than three hours before the start and ending five minutes before the start, unless otherwise decided by the jury. All competitors on the course must wear their start numbers (or training bibs in the case of reserve athletes.) Team staff must wear their assigned bibs when skiing on the course, if provided. From five minutes before the start, skiing on the course is forbidden, but team members may walk on the edge of the course.

5.5 Ski Testing on the Competition Course

The TD, in coordination with the RD, may authorize the use of electronic ski testing devices on the competition course in areas of sufficient course width and configuration. If electronic ski testing devices are allowed, they must be removed from the course at least five minutes before the start.

6. START REGULATIONS

6.1 Start types and Intervals

6.1.1 General

There are four types of starts: single; pursuit; group and simultaneous; and two standard start intervals – one minute or 30 seconds. At all IBU events, the following regulations will apply:

6.1.2 Individual and Sprint Competitions

Competitors will be started individually at all Individual and Sprint competitions, normally with 30 second intervals. However, shorter or longer intervals will be permitted if it is best for the competition. At Sprint competitions, group starts can be used. The RD/TD will decide which start type and start interval is the best for the circumstances, in consultation with the OC.

6.1.3 Pursuit Competitions

No standard start interval is used in Pursuit competitions. Competitors must start at the exact time listed in the start list as their start time, which is the length of time they finished behind the winner of the qualifying competition, rounded to the nearest second.

6.1.4 Mass Start Competitions

In Mass Start competitions, the competitors all start together in one single simultaneous start.

6.1.5 All Relay Competitions

In all Relay competitions the first competitors of each team all start simultaneously. Subsequent starts by other team members are done by the incoming team member tagging the next team member in the relay hand-over zone. The start sequence in the Mixed Relay is woman, woman, man, man.

6.1.6 Super Sprint Competition

6.1.6.1 In the Super Sprint qualification competition, all competitors start, individually with an interval of 15 seconds between each competitor.

6.1.6.2 In the Super Sprint final competition, all competitors start in one single simultaneous start, with three lanes.

6.2 Starting Positions and Starts

6.2.1 Single Start with Electronic Timing

Competitors must stand as close to the gate as possible and must pass through the gate at their starting time.

6.2.2 Single Start with Manual Timing

If only manual timing is used, competitors must stand with both feet completely behind the start line and must cross the line at their starting time.

6.2.3 Pursuit Start

Competitors must arrive in the start area at least two minutes before the start for placement into their start lanes. They must line up sequentially in their assigned start lanes. Each simultaneous start must be from a separate lane. An analysis of each start will be done by an official. Competitors themselves are responsible for starting and must start at their assigned start time from their assigned lane.

6.2.4 All Relay Starts

In all Relay competitions the first starters must stand in their assigned start position with both feet beside the marking in their start row, or beside their

start position if no other marking is there. The competitors must start when the designated start signal is given. Subsequent members of a Relay team must stand in the hand-over zone, according to the current competition standing, and must start when tagged by the incoming team member.

6.2.5 Group Start

In group starts, the competitor with the lowest start number of that group will take position 1, the second lowest position 2, etc. They must stand as for the Relay simultaneous start and must start when the designated signal is given. This process will be repeated for each group.

6.2.6 Mass Start Competition Start

The Mass Start competition starts in the same way as for the first starters in the Relay simultaneous start.

6.2.7 Super Sprint Competition Start

The start order for the Super Sprint qualification competition will be decided by the OC together with the IBU for the respective competition. In the Super Sprint final competition, competitors will be assigned start numbers and start positions based on the results of the Super Sprint qualification competition. Competitors in the Super Sprint final competition will start in the same order in which they finished the qualification competition: the winner of the qualification competition will start with start number 1; the competitor placed second in the qualification competition will start with start number 2, and so on.

6.3 Start Signals

6.3.1 Single Starts – Electronic Timing

The start command will be given by the sound of the start clock – a loud beep, and by the visual time on the start clock. The starter must not touch the competitor.

6.3.2 Single Starts – Manual Timing

At single starts without an electronic start gate, the starter will say “Ready” 10 seconds before the start time and then count down loudly from 5 seconds before the start, saying “Five-four-three- two-one.” At the exact start time, the starter will give the command “Go.” The starter must not touch the competitor.

6.3.3 Pursuit Starts

Two clocks are provided that the competitors must use for their assigned start time.

6.3.4 Simultaneous and Group Starts

In all the Relays, Mass Start competition, Sprint competition with group starts and Super Sprint Final, the start signal will be given by a shot from a start pistol or another start device, or with a flag. Verbal warning signals will be given at 1 minute, 30 seconds and "ready" prior to the start, with the start signal given within 5 seconds after "ready."

6.3.5 Start in the Hand-Over Zone

In Relay competitions, the relay hand-over must take place within the hand-over zone in such a way that the incoming competitors touch the body (including torso, arms, legs, hands, feet and head) or the rifle of the outgoing competitor with their hand.

6.4 Start Time, Early Start, Late Start and False Start

6.4.1 Electronic Start Time

In single starts, the electronically recorded time when the gate is activated will be considered the start time if competitors activate the gate within 3 seconds before or 3 seconds after the time designated in the start list. If a competitor starts more than 3 seconds before the scheduled time, it will be considered an early start. If a competitor starts more than 3 seconds later than the scheduled start time, it will be considered a late start and the competitor's time will begin from the scheduled time of start.

6.4.2 Manual Start Time

If only manual timing is used for a single start, the competitors' start time will be the time stated in the start list. If a competitor starts before the start signal, it will be considered an early start. If the competitor starts too late, it will be considered a late start.

6.4.2.1 Pursuit Competition

Each competitor's start time is the time listed in the start list. In the event of an early start, the competitor will be penalized or disqualified according to the appropriate disciplinary rule. If a competitor arrives too late at a start, the late competitor must be directed through the spare passage,

and the official at that point will record the exact time when the competitor crosses the start line. If competitors were late by their own or their team's fault, their competition time will be calculated from their official start time in the start list. If the cause of the delay was force majeure or incorrect or accidental actions of someone outside their team, their competition time and placement in the Pursuit will be calculated from the time recorded by the official.

6.4.3 Relay and Mass Start Competitions and Sprint Competitions with Group Starts

The start time is the time when the start signal sounds.

6.4.4 Hand-Over Zone Start Time

The start time of the relay team member who is taking over is the moment when the incoming team member enters the hand-over zone by crossing the timing line at the beginning of the zone.

6.4.5 Early Start – Mass start, Sprint, Individual and Relay Teams

If a competitor starts too early in a Mass Start, Relays, Sprint or Individual competition or leaves the hand-over zone without a valid tag, the competitor must return to the start or the hand-over zone. The competitor must then return to behind the start line – or to the hand-over zone in Relay competitions – and start again. If possible the competitors will be restarted at their correct start time either through the gate or over the start line using manual timing (except in the Relays). If the correct start time has already expired, the time of start will revert to the listed start time. Time thus lost will count against the competitor.

6.4.6 False Start – Simultaneous, Group and Hand-Over

If there is a false start during a simultaneous or group start, the IBU Referee and officials in charge may fire a second shot and will stop the competitors. The competitors must then start again. If the Relay hand-over occurs before or after (outside) the hand-over zone, it will be considered a false start and the procedure must be repeated within the zone. Competitors or Relay teams who have made a false start and do not return to start again correctly will be considered as not having started.

6.4.7 Late Start

If competitors are late to the start, they must start at the first possible

opportunity as directed by the assistant starter, without obstructing other competitors.

6.4.7.1 If competitors start late due to their own fault, their start time will be recorded as the one on the start list. If their late start was due to force majeure, the competition jury will decide their start time.

6.5 Start Numbers

6.5.1 General

At all IBU competitions, all competitors must wear the bib assigned to them that has their start number on it. Competitors must also wear their start number on both thighs. Competitors should ensure that their start numbers remain attached to the required positions during a competition. The start number and sequence color worn by a competitor must be the number and color assigned for that competitor for that competition on the competition start list.

6.5.1.1 Numbering

At OWG, WCH, WC, OECH (M/W) and IBU Cup competitions, the set of men's and women's start numbers for each start must begin with the number 1 and must continue in numerical order to the last number.

6.5.1.2 Color

The color of the start numbers must clearly contrast with the base color of the cloth/fabric.

6.5.1.3 Sizes of Start Numbers

The start number sizes required in IBU competitions are detailed in the Materials Catalogue.

6.5.2 Start Number Colors by Competition

6.5.2.1 Individual, Sprint, Pursuit, Mass Start and Super Sprint Competitions

All competitors' start numbers must be of the same design.

6.5.2.2 Relay Competitions

The start number colors that must be used within a team are: red for the starting member, green for the second, yellow for the third and blue for the fourth.

6.6 Weather Conditions

6.6.1 Temperature

Biathlon competitions must not be started if the air temperature is colder than minus 20 degrees Celsius measured at the coldest part of the site (range or course), 1.5 m above ground.

6.6.2 Wind Chill

If it is colder than minus 15°C, wind chill and humidity must be considered before starting and during the competition. In the case of a high wind chill factor, the competition jury will decide whether to start or continue the competition, in consultation with the IBU Medical Delegate or the Competition Physician. The course to be skied may also be changed to avoid windy areas.

7. SKIING REGULATIONS

7.1 GENERAL

7.1.1 General Skiing Rules

Competitors must ski the stipulated competition course in the correct sequence and direction on skis, carrying their rifle and the required number of magazines and rounds, and following the marked course precisely. They may use no other form of propulsion than skis, poles and their own muscular force. All skiing techniques are permitted. Since they are required for timing and other measuring purposes, competitors must carry the electronic transponder device(s) provided by the event timing firm, during the competition, attached to one or both ankles as directed. The transponder may not be removed until the official removal place after the competition. The transponder must be of such design that it does not interfere with the competitors' movements in the competition. The maximum weight of each transponder may not exceed 25 g.

7.1.1.1 Did Not Finish

If competitors withdraw from the competition before the finish, they must inform the first official they meet and they are responsible for returning the transponders and the start number to the finish equipment/materials and clothing inspection area as soon as possible and performing the required safety check.

7.1.2 Carrying Rifles

Rifles must be carried on the competitor's back, with the barrel pointing up. If the rifle becomes so damaged during the competition that it cannot be carried on the competitor's back, it must be safely carried in hand to the shooting range and then must be immediately exchanged for the team reserve rifle.

7.1.3 Wrong Course Section

If competitors ski on a wrong course section, or the wrong sequence, they must return to the point where they made the wrong turn, along the part of the course they have skied in error. In order to do so, the competitors may have to ski against the correct ski direction and will be fully responsible for ensuring that they do not obstruct or endanger other competitors. There will be no penalty for having committed the error as long as no other competitors have been impeded.

7.1.4 Passing and Giving Way

A competitor, who is in position to pass another competitor, and wishes to pass, must yell "Track." A competitor who is about to be overtaken must clear the course in front of the passing competitor at the first yell of "Track" or other voice signal, even if the course is wide enough. However, this obligation does not apply to the last 50 m before the finish line and the last 50 m before the hand-over zone. The competitor on or exiting the penalty loop has the right of way over the competitor entering the penalty loop.

7.1.5 Skiing Penalty Loops

In all competitions in which the shot-penalty is the 150 m penalty loop, competitors must ski the loop once for every missed target immediately after the shooting bout.

7.1.5.1 Responsibility

Competitors themselves will be responsible for skiing the required number of penalty loops immediately after the shooting bout. They are not permitted to complete penalty loops at a later time.

7.1.5.2 Penalty Loop Error

If, due to a mistake by the OC or a target malfunction, competitors ski the wrong number of penalty loops, the competition jury must decide on

an appropriate time adjustment. In each competition where the penalty loop is used, the OC must ensure that the average penalty loop ski time is recorded, based on at least five competitors.

7.1.6 Start for All Relays, Mass and Group Starts

The use of the skating technique in simultaneous or group starts (one or both legs sideways) is permitted once the start signal is given. Passing is allowed after the start signal is given.

7.2 Obstuction

It is strictly forbidden to impede other competitors in any way at any time during the competition. This ban also includes dropping objects on the competition course or the shooting range in such a way that other competitors are impeded.

7.3 Exchanging Equipment, Repairs, Assistance

7.3.1 Exchanging Skis and Poles

Competitors may exchange one of their skis, but only if it is broken or the binding is damaged. When it can be objectively proven that a competitor has broken both skis or bindings by accident, the jury can accept the exchange of both skis in order for the competitor to finish the competition. Poles and straps may be exchanged repeatedly. On the shooting range, equipment may only be passed to the athletes by competition officials. The replacement skis and poles must be in conformity with the IBU Materials Catalogue rules.

7.3.2 Glide Performance and Equipment Repairs

Competitors may not change the glide performance of their skis by applying any substances during a competition. They may repair their equipment during a competition, provided they receive no assistance from any other person.

7.3.3 Rifle Repairs, Exchange and Ammunition

Assistance to repair a rifle is only permitted on the shooting range by the competition armorer or a competition official on the shooting range. A rifle may be exchanged only on the shooting range. Competitors are permitted to receive ammunition and magazines only on the shooting range.

7.3.4 Refreshments

Competitors may consume refreshments during the competition. The refreshments may be handed to them.

7.3.5 Other Assistance

Competitors are not permitted to receive any assistance from any other person, other than as expressly stated in these rules.

8. SHOOTING REGULATIONS

8.1 General

8.1.1 Shooting Rules

All shooting during training and competition must take place at the shooting range. In a competition competitors must shoot after having completed each of the required sections of the course for the competition, except the last section which will end at the finish or the relay hand-over. The shooting specifications for all competitions are given in Table 1 under 1.3.10. When a rifle is taken out of the stadium area, it must be in a case or a cover bag.

8.2 Shooting Rules for Specific Competitions

8.2.1 Selecting Shooting Lanes

In Individual and Sprint competitions, shooting lanes may be freely chosen by the competitor from among the targets that are ready in the correct sequence (prone or standing). In the Pursuit, Individual and Sprint with group start competitions, the competitors must go sequentially in the shooting lanes starting with lane 1 and taking the lowest available number, until the last shooting lane is reached, at which time the next competitor must go to lane number 1 and the process begins again. In the Mass Start, in the first shooting bout the competitors must shoot from the lane number designated by their start number, and in subsequent bouts by filling in the range sequentially from the right in the order of competitors' arrival on the range. In Relay competitions, the shooting lane designated by the team's start number must be used for the first shooting bout by the first competitor of each team; after that the range

will be filled in sequentially from the right in the order of competitors' arrival on the range.

8.2.2 Relay Competitions – Spare Rounds

In the Relay competition, each competitor must fire the first five rounds and if targets remain standing they must use the three spare rounds until all five targets are hit or until all eight rounds are fired. If competitors need spare rounds after having fired the first five rounds, the spare rounds must be hand loaded one by one – not loaded directly from a magazine.

8.3 Shooting Positions

8.3.1 Prone Position

In the prone position, competitors must comply with the following regulations: the rifle may only be in contact with their hands, shoulder and cheek. The lower side of the wrist of the arm supporting the rifle must be distinctly raised from the ground (snow surface).

8.3.2 Standing Position

In the standing position, competitors must comply with the following regulations: they must stand without any support. Only their hands, shoulder, cheek and the area of their chest next to their shoulder may be in contact with the rifle. They may hold the arm supporting the rifle against their chest or prop it against their hip.

8.3.2.1 No Removal of Skis

Removing one or both skis while shooting – including training and zeroing – is prohibited, and placing any kind of object under the skis is also prohibited.

8.3.3 Position in Shooting Lane

Competitors must ensure that no part of their body, clothing, materials or equipment protrudes over the 1.5 m red lines marking the shooting lane or the extension of those boundaries while shooting. Competitors must also ensure that their rifle muzzle extends over the firing line.

8.3.4 Enforcement

If competitors are warned by a range official that their shooting position or their position in the shooting lane is not in compliance with the rules, those competitors must immediately correct their position.

8.4 Shooting Aids

8.4.1 Use of Shooting Sling and Arm Cuff

Competitors are permitted to use a shooting sling and arm cuff in both the prone and standing positions.

8.4.2 Use of Magazine

The five rounds required in each bout of shooting may be loaded with the use of a magazine. If, after the first shot is fired, rounds are lost from the magazine or fail to fire, a new magazine may not be inserted into the rifle. Such rounds must be loaded individually. However, if a magazine is lost or proves to be defective before the first shot is fired, it may be replaced with another magazine, provided no live round remains in the chamber.

8.5 Safety Regulations

8.5.1 General

Shooting is only permitted on the shooting range, during officially authorized times. Making rifle movements that might endanger others or the competitors themselves, or that may be perceived by others as dangerous, is forbidden. The rifle muzzle must be over the forward edge of the shooting ramp (firing line) from the beginning to the end of the shooting bout. When the range is open for shooting, no one is permitted to be forward of that line. TV crew members and photographers must take responsibility for their own safety if they enter this area. At all times, competitors will be responsible for the safety of their actions and rifles.

8.5.2 Loading and Unloading

After starting in a competition, it is forbidden to open the bolt or remove a magazine from the stock or magazine-well except when stopped on the shooting mat. Rifles may be loaded and unloaded only with the barrel pointing in the direction of the targets or up. Inserting a magazine containing bullets into the rifle is also part of the loading procedure. When moving from one shooting lane to another, competitors must first unload their rifle and place the rifle on their back in the normal carrying position.

8.5.2.1 Safety Check on the Range after Shooting

Rifles must be unloaded after each shooting bout – that is, no round may

be left in the chamber or in the inserted magazine. However, competitors are permitted to leave the cartridge case in the chamber and the empty magazine in the rifle after the last shot. At the end of training, competitors must perform a safety check before leaving the shooting range by opening the bolt and removing the inserted magazine, with the barrel pointed toward the target or upward. Competitors must also remove all ammunition from both the stock and the magazines before leaving the shooting range.

8.5.3 Aimed Shots

All shots must be aimed and fired at the targets only.

8.5.4 Removal of Rifle on the Range

Competitors may not remove a strap of their rifle carrying harness from their shoulder before they have reached the shooting lane from which they will be shooting. They must cross the lane marking line with both feet and lay both ski poles on the ground prior to removing their rifle from the carrying position.

8.5.5 Safety at the Finish

At all IBU competitions there must be one or more official(s) at the end of the finish area to open the rifle action of every competitor. This check may only be performed when the rifles are pointing upwards. At the same time, the official will inspect the cartridge case ejected from the chamber. If this safety check is not done, the competitors must do it themselves. All ammunition must be removed from the stock and the magazines.

8.6 Misfires, Lost Rounds/Magazines and Damaged Rifles

8.6.1 Misfires and Lost Rounds/Magazines and Damaged Rifles

Misfired or lost rounds, or magazines, may be replaced by competitors themselves if they are carrying spare rounds or magazines. If they are not carrying spare rounds or magazines, competitors may obtain replacement rounds or magazines from a range official by raising a hand and loudly saying "Ammunition" and the name of their NF. The range official who responds will get the spare rounds from the team's reserve rifle or from the team's support staff behind the range and deliver them to the competitor.

8.6.2 Damaged or Non-Functional Rifles

If a competitor's rifle needs to be repaired or otherwise made functional, the competitor may do the repairs or may accept assistance, but only from the competition armorer or a range official. If the rifle cannot be made functional, it may be exchanged for the team's reserve rifle.

8.6.2.1 Reserve Rifle

Rifles that have been damaged or are not fully functional during the competition, or that malfunction for technical reasons to such an extent that they cannot be used to continue the competition, may be exchanged for a team reserve rifle that has been inspected and marked at the equipment check and deposited by the team in the designated reserve rifle rack on the range before the competition. The competitor must then complete the competition with a reserve rifle.

8.6.2.2 Rifle/Magazine/Ammunition Exchange Procedure

If a competitor's rifle has been damaged or a magazine lost on the course, the competitor may ski to the team reserve rifle in the rack on the range, prior to going to the shooting lane, and exchange their rifle or replace their magazine, and then continue to their shooting lane. During shooting competitors must indicate that their rifle needs to be exchanged by raising their hand. When a range official responds, the competitors must point to their rifle and say "Rifle" and the name of their NF loudly. The range official will obtain the team's spare rifle from the designated rifle rack and bring it to the competitors.

8.6.3 No Time Adjustment

There will be no time adjustment for repairing or exchanging a rifle or obtaining a spare magazine or rounds.

8.6.4 Response by Range Officials

All range officials must be alert so that they notice a raised hand or a yell by a competitor asking for spare rounds or rifle exchange. Range officials must react with a sense of urgency and move quickly to minimize the time required to bring the rounds or to exchange the rifle.

8.7 Target Errors and Malfunctions

8.7.1 Incorrectly Set Target

If a competitor is confronted with an incorrectly set target, the incorrect target must be set to the correct position immediately. The competitor will then commence shooting from the beginning and will be allowed to use a new magazine if five new shots are needed to complete the bout of shooting. In the event that the competitor had hits from the standing position for a target that was mistakenly set for prone, the hits may be scored.

8.7.2 Target Malfunction

If a target fails to function, the competitor must be directed to another target and the defective target must be blocked off immediately. The range official will inform the competitor whether to continue the shooting bout or recommence shooting from the beginning.

8.7.3 Cross-Firing, Shooting from the Wrong Lane, and Targets Hit by Another Competitor

If the target at which a competitor is shooting is fired at by another competitor, the one shooting incorrectly must be stopped immediately. If no target plates have fallen, the correct competitor may continue shooting. If a target plate has been hit, the target must be reset immediately and the competitor must then fire the remaining shots on the reset target.

8.7.3.1 Before such a target is reset, the hits and their positions must be recorded. In such a case in the Sprint, Pursuit, Mass Start or Relay competition, the range official must tell the competitor how many penalty loops to do.

8.7.3.2 If competitors cross-fire onto a target not in their shooting lane, and no other competitor is shooting on that target, they will be allowed to continue without the mistake being pointed out to them. However, hits on the wrong target will not be scored. Only those of the competitor's hits that are on the correct target will be scored.

8.7.3.3 For all shooting bouts where shooting lanes are assigned by start number (first shooting bout in Mass Start and Relay), competitors must shoot from their assigned lane unless they are prevented due to the error of another competitor.

8.7.4 Time Adjustments and Responsibility

In those cases where competitors lose time due to a target error that is not their fault, or to a target malfunction, the competition jury will make an appropriate time adjustment.

8.7.4.1 Own Error

If, however, competitors make an error such as cross-firing or selecting a target that has been used and not reset, they themselves will be held responsible and no time adjustment will be made.

8.7.5 Scoring of Shooting

A system of scoring the shooting must be put in place by the OC for all shooting in competitions. Each shot that is fired in a competition must be observed by three independent persons or methods. At events where an electronic target-scoring device is in use and/or required, there must be two separate observations by range officials.

9. THE FINISH, COMPETITION TIME AND RESULTS

9.1 The Finish

9.1.1 Moment of Finish

Finish is the moment when a competitor's or a Relay team's competition time ends. When electronic timing is used, the finish is when the beam of the electronic sensor at the finish line is broken by the competitor. When manual timing is used, the finish is when the competitor crosses the finish line with one or both feet. In Relay competitions the timing is to be taken from the last member to finish.

9.2 Competition Time

The competition time is the period of time elapsed during the competition on which the placing of a competitor or relay team in the results of the competition is based. The time always includes any penalties or adjustments imposed or awarded by the competition jury.

9.2.1 Individual Competitions

In Individual competitions, the competitor's time is the time elapsed between start and finish plus any shot-penalty minutes imposed.

9.2.2 Sprint, Pursuit and Mass Start Competitions

9.2.2.1 In Sprint competitions the competitors' time is the time elapsed between their start and finish.

9.2.2.2 In the Pursuit competition and the Mass Start competition, the first competitor to cross the finish line, after penalties and time adjustments have been accounted for, will be declared the winner. This also applies to the rankings of subsequent finishers. The competitor's time is the time elapsed between the first start and the finish.

9.2.3 Overtaken competitors in Pursuit and Mass Start competitions

In Pursuit and Mass Start competitions at OWG, WCH, WC, OECH (M/W) and IBU Cups, lapped competitors must move to the side and stop competing in the competition immediately when they are overtaken by the leading competitor.

9.2.4 Relay Competitions

In all Relay competitions the competition time of a team member is the time elapsed from the start, or hand-over, to the next completed hand-over or from the hand-over to the finish. The total time of a relay team is the time elapsed between the start of the first member to the finish of the last member. The time of the incoming members stops when they cross the timing line into the hand-over zone; the time of the outgoing members begins at the same moment.

At OWG, WCH, WC, OECH (M/W) and IBU Cups: Lapped competitors must move to the side and stop competing in the competition immediately when they are overtaken by the leading competitor. Those teams will be ranked on the results list and receive all associated points based on the last timing point they passed.

9.2.4.1 Placing in Relay competition

The placings of relay teams in the results will be decided by the finishing order of each team's respective last competitors, after time penalties and/or time adjustments have been accounted for.

9.2.5 Equal Time – Tie

If two or more competitors have the same competition time, they will be placed in the results with equal (tie) rankings. In Pursuit, Mass Start and Relay competitions at OWG, WCH, Y/J WCH, WC and OECH events, if

analysis of the photo-finish camera data cannot determine the order in which two or more athletes have finished, a tie will be declared. Equal placings (ties) in a competition will be given an equal number of points.

9.2.6 Photo-Finish

In Pursuit, Mass Start and Relay competitions at OWG, WCH, Y/JWCH, WC, IBU Cup and OECH events, a photo-finish camera must be installed at the finish line to record the finish. The camera must be placed exactly in line with the finish line and in such a position that the entire finish line is seen by the camera. If the photo-finish record is required to decide the order of finish, the order in the photo-finish record will determine the placings. The decision will be based on the first part of the first foot crossing the finish line. If there is a photo finish, the competition jury will decide the finish order based on the photo finish record.

9.2.6.1 Finish Video Camera

At OWG, WCH, Y/JWCH, WC, IBU Cup and OECH events, a video camera must be installed at the finish in such a way that it will record the start numbers of competitors as they cross the finish line. Such a system is recommended for all other events as well.

9.2.7 Intermediate Times

At OWG, WCH, Y/JWCH and WC competitions, competitors' times must be available for the electronic information board, the media and teams after each bout of shooting. An intermediate timing line will be set after the penalty loop (or after the range for the Individual competition) and each competitor's time must be recorded after each bout of shooting.

9.2.8 Interrupted Competitions

9.2.8.1 At Pursuit and Mass Start competitions where the jury determines it is not possible to complete the fourth bout of shooting, the finish time will be taken at the timing point after the penalty loop following the third shooting bout. At competitions where less than three bouts of shooting are completed, the competition will be stopped and no official results will be produced.

9.2.8.2 At relay competitions that are stopped after the third leg of the relay is completed, the time recorded at that hand-over will be the final result.

9.3 Timing Systems

9.3.1 Requirements

Competition time must be measured electronically, backed by manual timing. Manual timing may be used only if the electronic system fails during the competition. Specifications of timing equipment are given in the IBU Materials Catalogue (Annex A).

9.3.2 Units of Measurement

Electronically and manually measured competition times must be registered to 1/10 (0.1) of a second.

9.4 The Competition Results

9.4.1 General

Results are the record of the performance of the competitors or teams in a competition. The OC will be responsible for producing and distributing the results on paper and electronically. At all IBU events, English must be used in the results; however, more than one language may be used in the same results. Provisional and final results must include the following information:

a. Name and location of the event;

b. Type, time and date of the competition;

c. Course and weather data;

d. Names of the competition jury members;

e. Signature of the TD;

f. Number of competitors entered and total ranked;

g. Number of those who did not start and did not finish;

h. Notes about imposed penalties: Article, time adjustment or kind of penalty;

i. Columns for:
   - placings, in ranking order from first to last;
   - start numbers;
   - last and first names of competitors
   - competitors' year of birth (for start and result lists, when possible);

- NF or team;
- shooting penalties per bout;
- shooting penalties, total;
- ski times to 1/10 (0.1) second;
- total time, and team time in Relay;
- time behind;
- World Cup points (when appropriate);
- Nations Cup points (when appropriate).

For the Pursuit competition the times shown are the time behind the first starter for the winner, followed by the time behind the winner for the remaining competitors.

9.4.1.1 Ties

If there is an equal competition time, the tied competitors will be given equal ranking and equal points in the results; however, there will be no next placing in the results.

9.4.2 Types of Results

There are three types of results: intermediate, provisional and final.

9.4.2.1 Intermediate Results

Intermediate results reflect the competition situation during the competition and are for information only. They will be displayed on the score board, announced by the public announcer and will be available through the electronic information system.

9.4.2.2 Provisional Results

Provisional results are the first official record of the competition produced by the OC after the last finish. Provisional results are always subject to protest and must be published and posted at the finish area and competition office as soon as possible after the last competitor has finished. The TD must sign and write the time of posting on the provisional results list so that the end of the protest period is clear.

9.4.2.3 Final Results

The final results are the incontestable final record of the competition and must be published immediately after the deadline for protests has passed, or as soon as the competition jury has made its decisions on protests that have been submitted.

9.4.3 Results Booklet

The final results and other important information about all the competitions for all IBU events must be made into a booklet or posted online.

Three complete booklets of all competition documents must be sent to the IBU headquarters. The booklets must contain:

a. the event program;

b. participant list - NFs, competitors, trainers;

c. decisions of the competition jury and jury of appeal;

d. all final results, with applicable points lists and title page.

All results pages in the booklets must be on white paper only.

9.4.4 Distribution of Booklets and Results

Any NF may request a printed copy of the results booklet from the OC. In addition, the results of the whole season will be made available to all NFs on the IBU website.

10. PROTESTS

10.1 General

Protests must be submitted in writing to the competition secretary or the TD/RD, using the official IBU Protest Form, for the attention of the competition jury, and must be accompanied by a fee of €100, or equivalent in the currency of the host NF. The IBU protest form can be obtained from the Competition Secretary or downloaded from the IBU website. If the protest is upheld, the fee will be refunded. If the protest is rejected, the sum will go to the IBU.

10.2 Protest Types and Conditions

10.2.1 Eligibility Protests

Protests concerning the eligibility of a competitor may be submitted at any time up to the end of the protest time for the competition in question.

10.2.2 Protests During and After Competitions

Protests concerning violation of rules by competitors and team staff,

mistakes made by officials, competition conditions and the provisional results must be submitted in the time period from the start of zeroing before the competition until 15 minutes after the posting of the provisional results. The OC must make a clear announcement regarding where the provisional results will be posted.

10.2.3 Repetition or Annulment

If the examination of a protest reveals circumstances that are so serious that cast doubt on the sporting merit of the competition, or if the competition jury from its own observation comes to the same conclusion, the competition jury may decide to repeat the competition or to annul the competition without repetition.

11. PENALTIES

For penalties, refer to the IBU Disciplinary Rules.

12. WORLD CHAMPIONSHIPS – EVENT RULES

12.1 General Regulations

12.1.1 Jurisdiction and Terms

The WCH and Y/JWCH are IBU events and are held under its jurisdiction for men, women, junior men and junior women, and for youth men and youth women. In this section the rules stipulated for WCH will also apply to the Y/JWCH unless a specific difference is indicated.

12.1.2 Event Dates

WCH will be held annually and jointly for men and women during dates approved by the IBU EB, but will not be held during years of the OWG. Y/JWCH for junior men and junior women and for youth men and youth women together will be held annually during dates approved by the IBU EB. If any IBU competition that is normally held at the WCH is not in the program of the OWG, a WCH competition will be held for it in years of the OWG.

12.1.3 Best Biathletes – Financial Responsibility and Selection

Each OC of the WCH must pay the accommodation and meal expenses for the best 30 male and the best 30 female biathletes for a maximum

of twelve days during the WCH. The best biathletes at the WCH will be selected from the top rankings of the current WC total score prior to the start of the WCH.

12.2 Bids to host and Appointment of OC's

12.2.1 General

The task of organizing the WCH will be entrusted by the IBU Congress to a member federation of the IBU for the appointed location between a minimum of four and maximum of five years in advance.

12.2.2 Application to Host a WCH

The bid to host a WCH must be submitted to IBU in writing by a NF.

The application and the application fee must be received not later than 90 days before the applicable IBU Congress.

The application fee is as follows:

1st Candidacy for an IBU WCH: Application fee € 45,000.--

If not elected by the IBU Congress, one-third of the fee will refunded by the IBU to the respective NF (€ 15,000)

2nd Candidacy for an IBU WCH: Application fee € 30,000.--

If not elected by the IBU Congress, half of the fee will refunded by the IBU to the respective NF (€ 15,000)

3rd and any further Candidacy for an IBU WCH: Application fee € 10,000.--

No refund

The venue for which the bid is made must have an A license at the time of the application deadline. The application must be submitted using the official IBU application form and must be signed by the NF president or SG.

12.2.3 The IBU Event Hosting Declaration

After a host for a WCH has been appointed, the hosting NF must sign the IBU Event Hosting Declaration. By signing, the hosting NF will testify that it accepts and will fulfill, in the required time, the tasks, measures and duties stipulated in the Declaration.

12.3 Event Schedule and Program

The proposed event schedule and program will be established by the OC in consultation with the RD and submitted to the IBU headquarters at least two years prior to the start of the event. The program must be submitted to the TC for review and must be approved by the IBU EB at the latest one year prior to the start of the WCH.

12.4 Progress Reports

The OC must report regularly about its progress to the IBU.

12.5 Information Bulletins and Invitations

12.5.1 Preliminary Information

At least one year prior to the WCH, the OC must send a preliminary information bulletin approved by the RD to all IBU member federations and to the IBU headquarters. The bulletin must provide all significant information about the WCH that is required by the NFs at that time.

12.5.2 Official Invitation

Not later than 1 September of the year preceding the WCH, the OC must send the official invitations approved by the RD to all IBU NFs and to the IBU headquarters. NFs that require a special invitation for visa purposes must request them from the OC.

The OC must circulate detailed information to all IBU NFs and to the IBU headquarters. The Invitation must provide detailed information in accordance with the OC Guidelines.

Invitations may be sent in electronic form by e-mail and by placement on a website with notification by e-mail.

12.6 Participation

12.6.1 Quotas – WCH

12.6.1.1 Maximum Registration and Entries

Each NF may register and enter athletes according to the quota shown below based on their Nations Cup rank from the previous season.

NATION CUP RANK	WCH REGISTER	WCH START	TOTAL REGISTERED	TOTAL START
1 – 5	8	4	40	20
6 – 15	7	4	70	40
16 – 25	5	3	50	30
26 – 30	4	2	20	10
31 + & Not Ranked (Wild Cards total 10)*		10	10	10
			190	110

* Maximum 2 athletes per NF

12.6.1.1.1 Additional Start Quotas

a) Those NFs without a quota based on their Nations Cup ranking can earn a start quota of up to a maximum of two competitors through NF Wild Cards. The 10 best-ranked athletes on the IBU qualifying-points list from a NF not already having a quota in the WCH, earn a start quota for their respective NF (maximum two per NF).

b) Additionally, the NFs of the Individual, Sprint, Pursuit and Mass Start champions of the previous year's OWG or WCH may enter those competitors at the WCH Individual, Sprint and Mass Start competitions respectively, in addition to their NF's quota. The Pursuit Champion of the previous year's OWG or WCH may enter additionally in the Sprint competition, however the NF's quota for the Sprint competition may not exceed five (5) per NF.

12.6.1.2 Pursuit Competitions

The top 60 competitors from the qualifying competition will be entitled to start in the Pursuit competition.

12.6.1.3 Mass Start Competitions

The Mass Start competition entries consist of 30 competitors, determined as follows: the top 15 from the WC total score plus any medal winners that are not among the top 15 in the WC total score, then the remaining competitors will be filled in from the points they have acquired in the Individual, Sprint and Pursuit competitions of the WCH being held, in ranking order. Start numbers will be assigned in the order as follows: the gold medalist of the first personal competition of the WCH will

receive start number 1; the gold medalist of the second personal competition will receive number 2; and the gold medalist of the third personal competition will receive number 3, with the silver medalists of the personal competition receiving start numbers in the same order beginning with start number 4–6, and bronze medalists in the same way beginning with start number 7–9. The top competitors in the current WC total score will receive start number 10, and so on. If a competitor has won more than one medal in the personal competitions of the WCH being held, he will receive the lowest start number in keeping with the above sequence and other competitors will move up in the same order, and the same principle will apply if more than one competitor wins multiple medals, or if one or more competitors are missing. Four competitors will be the maximum number of entries allowed by any one NF. However, if an NF has more than four medalists, then all medalists from that NF will be entitled to start. In addition to the NF's quota, the champions of the previous year's OWG or WCH Mass Start will be allowed to be entered. She and he will receive start number 30 unless they have already been selected in accordance with the above rule.

12.6.1.4 Relay Competitions

The best 30 NFs (women's and men's results) may enter relay teams based on the previous year's Nations Cup score.

12.6.1.5 Mixed Relay Competitions

A maximum of 30 Mixed Relay teams will be allowed to participate (one per NF), based on the sum of the NF's current women's and men's Nations Cup score. If any of the top-30 ranked teams are not entered, the next ranked teams may enter.

12.6.2 Quota – Y/JWCH

12.6.2.1 Maximum Registration and Entries

Each NF may register a maximum of five junior men and junior women each, and five youth men and youth women each in the Y/JWCH. The following entry regulations apply to specific competitions at the Y/JWCH:

12.6.2.2 Individual and Sprint Competitions

A maximum of four competitors per NF may be entered for each of the following classes: junior men, junior women, youth men and youth

women. Additionally, the NFs of the Individual and Sprint champions in the previous year's Y/JWCH will be granted the right to enter them at the Y/JWCH Individual and Sprint competitions in addition to their NF's quota, as long as the competitors are still in the same class as they were at the previous Y/JWCH.

12.6.2.3 Pursuit Competitions

In each of the classes junior men, junior women, youth men and youth women, the top 60 competitors in the qualifying competitions will be entered.

12.6.2.4 Relay Competitions

Each NF will have the right to enter one relay team per class for the Y/JWCH Relay competitions.

A competitor may start in one Relay only (youth or junior).

12.6.2.5 Team Staff

Article 1.5.1.1 f will apply accordingly.

12.7 Awards

12.7.1 Official Medals

Competitors placed first, second and third in the Individual, Sprint, Pursuit and Mass Start competitions will be awarded the IBU medal in gold, silver and bronze, respectively. Each member of the relay teams placed first, second and third will be awarded the IBU gold, silver or bronze medal respectively. IBU medals will only be given for competitions where three or more competitors or relay teams are competing.

12.7.1.1 Awards Ceremony

The presentation of the official World Championships medals must include flag raising and national anthems. Competitors may not appear with competition materials/equipment.

12.7.1.2 Flower Ceremony

The flower ceremony is the TV presentation of the top 3 competitors and top 3 relay teams immediately after the end of the competition. The competitors must appear wearing their competition start numbers, and may have with them their competition materials/ equipment.

12.8 Leader Start Numbers

The competitors, both men and women, who are the best ranked in the Individual, Sprint, Pursuit and Mass Start competitions in the current World Cup score will wear a numbered "World Cup Leader" start number during the World Championships instead of a conventional start number. World Cup Leader Bib colors:

a) Total score leaders – yellow

b) Individual, Sprint, Pursuit, Mass Start leaders – red

c) Total score leaders who are concurrently best ranked in the respective competition type – yellow/red combined.

13. THE OLYMPIC WINTER GAMES – EVENT RULES

13.1 Rules

The IOC has jurisdiction over the OWG; however, these Event and Competition Rules will apply to the OWG.

13.2 Venue Access for NF Teams

All NF Teams must be allowed access to the venue for 10 days in February the year before the Games and for 10 days each in December and January in the season of the Games. The courses must be groomed daily.

13.3 Schedule and Program

The event schedule and program for the competitions will be established by the OC in consultation with the RD/TD. The schedule and program must be submitted to the TC for review and must be approved by the IBU EB.

13.4 National Federation Quota

The NF Registration and Entry Quota for the OWG is based on the NF's ranking in the Nations Cup from the season before the OWG. Further details are determined by agreement between the IOC and IBU EB.

NATION CUP RANK	REGISTER	START	TOTAL REGISTERED	TOTAL START
1 – 5	6	4	30	20
6 – 20	5	4	75	60
21 – 22	2	2	4	4
NOCs Wild Cards (total 6) *			6	6
			115	90

* Maximum 2 athletes per NOC

13.4.1 Host Nation Exception to the OWG Quota

Subject to athletes meeting the IBU personal qualification criteria for the Olympic Winter Games, the host country of the OWG will be permitted to start with a minimum of one competitor and/or one team, of each gender, in each competition (with the exception of the Pursuit and Mass Start in which all athletes must qualify individually). The host country athletes entered under this provision must be included as part of the overall IBU/IOC athlete quota allocation. Any relay team that is entered under this provision will be entered in addition to the qualified relay teams and athletes.

13.5 Team Areas and Facilitys

13.5.1 Ski Preparation Areas

In or very near the stadium area, there must be a sufficient number of permanent buildings or good-quality temporary facilities in which teams may store materials/equipment and wax skis. These rooms or cabins must be provided with lights, electric power outlets and adequate ventilation for removing wax fumes, and must be warmed to at least 20 degrees Celsius.

Each NF/NOC must have its own wax cabin for at least 12 sq m, whilst NFs/NOCs with a total of eight or more competitors entered to start must be given two wax cabins or one very large cabin, unless they have a wax truck at the venue.

The cabins should be equipped with locking doors and teams are to be issued with corresponding keys. If the entrances cannot be locked, the OC must provide security for the cabins.

13.5.2 Parking Areas

Parking space for team vehicles, ski preparation trucks and/or ski grinding machine containers must be provided within reasonable walking distance of the cabins.

13.5.3 Changing Room/Cabin

Each NF/NOC with three or more competitors must be provided a changing room or cabin of sufficient space to meet the needs of the team size. Those NFs/NOCs with less than three athletes may share a changing room/cabin with one other NF/NOC.

13.5.4 Athlete and Team Staff Lounge

The OC must provide an athlete and team staff lounge at the venue, with sufficient food and beverage services at meal times and a snack service between meal times, beginning two hours before all scheduled trainings (both official and general trainings) and competitions, and closing one and a half hours after the conclusion of the last scheduled training or competition of that day.

14. CONTINENTAL CHAMPIONSHIPS AND CONTINENTAL CUPS – EVENT RULES

14.1 Continental Championships

14.1.1 General

The CCH are IBU events that are organized under its jurisdiction jointly for men, women, junior men and junior women. At events other than the OECH it is allowed to include competitions for youth man and youth women.

OECH hosts will be appointed by the EB based on the applications from the respective member federations and recommendations of the TC. Specific rules for the OECH are covered under Article 17 of these rules.

14.1.2 Competition Types

The following competition types are authorized at CCH: Individual, Sprint, Pursuit, Mass Start, Mixed Relay and Relay. All official IBU competitor classes are authorized to participate as stipulated by the respective NFs of the continent.

14.1.3 Eligibility and Participation

Competitors from all IBU member NFs will be eligible to participate in CC and CCH events.

However, only members of the teams of the host continent NFs will be eligible to be Continental Champions and medalists. Participation quotas will be set by the respective NFs from that continent.

14.1.4 Competition Rules

The IBU Event and Competition Rules apply to the CCH. Special rules may be developed and set by the respective NFs from that continent.

14.1.5 Awards

Official IBU medals will be awarded to the competitors as follows: first place – gold; second – silver; third – bronze. Additional prizes may be awarded by the respective NFs from that continent.

14.2 Continental Cups (CC) and Regional Cups (RC)

14.2.1 General

Continental Cups/Regional Cups are IBU events. The competition series are open to all IBU members. CC/RC may not be organized at the same venue and time as WC competitions. Exceptions may be authorized by the IBU.

14.2.2 Event Hosting Applications and Appointment of NFs

Each IBU member NF may apply to organize one or more CC/RC event(s) for their respective continent/region per season in their country. Applications must be submitted to the IBU by 15 September for events in the coming winter and by 15 April for events in the coming summer.

14.2.3 Competition Rules

The IBU Event and Competition Rules apply to the CC/RC in principle as far as they are applicable. Special rules may be developed by the respective NFs in that continent/region provided such rules obtain IBU approval together with the hosting application.

15. WORLD CUP – EVENT RULES

15.1 General Regulations

15.1.1 Jurisdiction

WCs are IBU events and are held under its jurisdiction for men and women. These rules apply to WC events.

15.1.2 TD and IR Expenses

The travel, accommodation and meal costs, and daily allowance of the IBU TD and IRs will be borne by the OC for the period they are required for the event, in accordance with the current IBU policy.

15.1.3 Best biathletes – Financial Responsibility and Selection

Each OC of a WC event must pay for the accommodation and meal expenses for the best 25 male and the best 25 female biathletes for a maximum of seven full days for a three-competition WC event and five full days for a two-competition WC event. The best biathletes for the current competition season up to the end of December will be selected from the top rankings in the previous year's World Cup total score. For the part of the season beginning on 1 January, the selection will be from the top rankings in the World Cup total score as of the end of December. For the part of the season beginning on 1 February, the selection will be from the top rankings in the World Cup total score as of the end of January and will continue on that basis for the remainder of the season.

The NFs of the male and female winners of the IBU Cup total score will also receive additional funding from the IBU for their winner's participation at the World Cup Final.

15.2 WC Annual Scheduling

15.2.1 Number of WCs per Season

The number of events to be held will be determined by the IBU EB based on the recommendation of the TC.

15.2.2 WC Annual Calendar

WC events will be held prior to and after the annual WCH or the OWG. They are to be held in the time-frame set by the IBU EB.

15.3 Bids to Host an Event and Appointment of Hosts

15.3.1 Authority to Appoint

Hosts of WC events will be appointed by the IBU EB, based on a recommendation by the IBU TC.

15.3.2 Applications to Host WC Events

Applications for hosting WC events must be submitted by the applying NFs to the IBU headquarters before the deadline set by the IBU EB. An IBU A license is required to apply. Applications must be submitted to the IBU headquarters using the official IBU application form and must be signed by the President or SG of the NF.

15.3.2.1 A NF may apply to organize one or more WC events during a competition season. In most cases a NF may organize only one WC event per season.

15.3.3 The IBU Event Hosting Declaration

The hosting NF must sign the IBU Event Hosting Declaration, thereby testifying that it accepts and will fulfill, in the required time, the tasks, measures and duties stipulated in the Declaration.

15.4 WC Program

The program for a WC event will be set by the IBU EB in consultation with the event host, the broadcasting company with which the IBU has entered a contractual agreement for TV distribution and the TC, as soon as possible.

15.5 Invitations

Invitations to WC events must be approved by the RD and must be sent by the OC to all IBU NFs and the IBU headquarters not later than three months before the start of the event. The invitation may be sent electronically by email or by posting it on a website with notification by e-mail.

15.6 Participation

15.6.1 Registration and Entry Quotas

Based on the previous year's World Cup Nations Cup score final standings, NFs may participate with the respective following quota of

male and female competitors at WC Individual and Sprint competitions, based on the NF's ranking in the previous season's Nations Cup score:

NATION CUP RANK	REGISTER	START	TOTAL REGISTERED	TOTAL START
1 – 5	8	6	40	30
6 – 10	7	5	35	25
11 – 17	6	4	42	28
18 – 23	5	3	30	18
24 – 25	4	2	8	4
Promotion from IBU Cup	2	1	2	1
NF Wild Cards (total 4)*	1	1	4	4
			161	110

* Maximum 1 athlete per NF

Wild-Card Definition and Purpose:

In addition to the quota for NFs stated above, four NF wild-cards granting a World Cup start quota for one competitor will be given to the NFs that do not have a World Cup quota. Wild-cards are limited to one per NF per gender and are valid for a single trimester. However, they may be renewed for the following trimester.

Eligible NFs:

The top four athletes on the IBU qualifying-points list from a NF not already having a quota in the WC earn a WC start quota of one for their respective NF. The IBU qualifying-points list will be updated after each trimester, or as scheduled and announced annually by the IBU EB. After each update the NFs earning a wild card quota will be allowed to register and start one athlete for the following trimester, or until the next update as scheduled and announced by the IBU EB.

Wild-Card Renewal:

At the end of each season, following the promotion/relegation of the NF WC quota (according to 15.6.2), eligible NFs will be given wild-cards for the first trimester of the following season if available.

Each athlete who starts in the WC (including NF wild-card athletes) will receive Nations Cup points and WC points, and will be listed in all competition results and point rankings.

15.6.2 Relegation and Promotion

At the end of the season, the following system of NF promotion and relegation between the WC and IBU Cup will be used:

Nations ranked 1-25 in the WC Nations Cup ranking automatically remain in the WC for the following season. The top NF in the IBU Cup Nations Cup score, not ranked in the top 25 of the WC Nations Cup score, will be granted a World Cup quota to register two and start one athlete for the coming season.

15.6.3 Additional Start Rights at WC Final on the Basis of IBU Cup Total Score

At the World Cup Final, NFs are allowed to enter competitors in addition to the quota based on how many competitors they have ranked in the top 10 of the IBU Cup total score final standings, up to a maximum of two per NF. The NF is free to use these additional entries for any qualified competitor. The NFs with the winner of the IBU Cup total score for men and women will also receive additional funding from the IBU for the winner's participation at the World Cup Final.

15.6.4 Pursuit Competitions

The top 60 competitors from the qualifying competition will be entitled to start in the Pursuit competition.

15.6.5 Mass Start Competitions

The Mass Start competition entries will consist of the top 25 competitors in the current WC total score and the remaining five competitors will be filled in, in rank order from the points they have acquired at the current WC event. If the last qualified competitors are tied, the one with the best WC total score will qualify. If competitors are absent from the top 25, they will be filled in from the current WC total score list in rank order. Start numbers will be assigned based on the list standings – with the top-ranking competitor receiving number 1, the second number 2, and so on. The final five start numbers will be assigned in rank order from the WC Points scored at the current event.

15.6.6 Relays

At WC events with relays, all NFs having a start right may register the minimum number of athletes required to compete in the relay provided all the athletes meet the qualification requirements for the WC. This rule

also applies to mixed relays and single mixed relays provided the NFs have both men and women with a start right for the WC. The affected NF teams are therefore allowed to register a maximum of four (4) for Relay competitions, two (2) per gender for Mixed Relay competitions and three (3) per gender when the Mixed Relay and Single Mixed Relay competitions are held at the same WC event.

15.7 World Cup Leader Start Numbers, Flower Ceremony and other Prizes

15.7.1 General

Men and women competitors who are ranked the best in the Individual, Sprint, Pursuit and Mass Start competitions in the current World Cup score and in the WC total score must wear a World Cup Leader start number during the competition.

15.7.2 World Cup Leader Start Numbers

The WC leader start numbers will have the competitors' number as shown on the start list, and be colored as follows:

a. WC total score leaders – yellow;

b. Each Individual, Sprint, Pursuit, Mass Start leader – red;

c. WC total score leaders who are at the same time best ranked in the respective competition type – yellow/red combined.

Numbers will be printed on the start numbers. Any advertising on the WC leader start numbers will be fully under IBU jurisdiction.

15.7.3 Provision of Leader Start Numbers

The World Cup leader start numbers will be provided by the IBU and will be brought to WC events as organized by the IBU.

15.7.4 Flower Ceremony

The flower ceremony is the TV presentation of the top 3 competitors and top 3 relay teams immediately after the end of the competition. Competitors must appear wearing their competition start numbers and may have with them their competition materials/equipment.

15.8 World Cup Scoring System

15.8.1 General

A scoring system will be used to reflect the competition performance of competitors, relay teams and NFs throughout each WC competition season. Those competitors who have attained the highest final scores of the season will be the winners.

15.8.1.1 Types of Scores

The following types of scores are used:

a. World Cup total score;

b. World Cup Individual score;

c. World Cup Sprint score;

d. World Cup Pursuit score;

e. World Cup Mass Start score;

f. World Cup Relay score;

g. World Cup Mixed Relay score;

h. Nations Cup score.

15.8.2 Awarding Points

There are two kinds of points awarded at WC and WCH competitions: World Cup points and Nations Cup points. They are awarded as follows:

15.8.2.1 World Cup Discipline Points

At each WC and WCH Individual, Sprint, Pursuit, Relay and Mixed Relay competition, points will be awarded for each discipline as follows:

1st place	60 points	2nd place	54 points
3rd place	48 points	4th place	43 points
5th place	40 points	6th place	38 points
7th place	36 points	8th place	34 points
9th place	32 points	10th place	31 points
further decreasing by one down to 40th place (1 point).			

For Mass Start competitions WC points will be awarded as follows:

1st place	60 points	2nd place	54 points
3rd place	48 points	4th place	43 points
5th place	40 points	6th place	38 points
7th place	36 points	8th place	34 points
9th place	32 points	10th place	31 points
further decreasing by one down to 21st place (20 points) and then decreasing by two points down to 30th place (2 points).			

15.8.2.2 Nations Cup Points

Nation Cup points are awarded separately for men and women. At each WC and WCH individual and sprint competition, the following points are awarded:

1st place	160 points	2nd place	154 points
3rd place	148 points	4th place	143 points
5th place	140 points	6th place	138 points
7th place	136 points	8th place	134 points
9th place	132 points	10th place	131 points
and then decreasing by one point down to 80th place and then decreasing by 2 points thereafter with one point awarded for 110th place and higher.			

For Relays at each WCH and WC Relay competition the following Nations Cup points will be awarded:

1st place	420 points	2nd place	390 points	3rd place	360 points
4th place	330 points	5th place	310 points	6th place	290 points
7th place	270 points	8th place	250 points	9th place	230 points
10th place	220 points	11th place	210 points	12th place	200 points
13th place	190 points	14th place	180 points	15th place	170 points
16th place	160 points	17th place	150 points	18th place	140 points
19th place	130 points	20th place	120 points	21st place	110 points
22nd place	100 points	23rd place	90 points	24th place	80 points
25th place	70 points	26th place	60 points	27th place	50 points
28th place	40 points	29th place	30 points	30th place	20 points

For the Mixed Relay and the Single Mixed Relay, half the Relay Nations Cup points will be awarded to each gender.

15.8.3 Criteria

15.8.3.1 WC Total, Individual, Sprint, Pursuit, Mass Start, Relay and Mixed Relay Scores

Scoring will be based on the Individual, Sprint, Pursuit, Mass Start Relay and Mixed Relay competitions at the WC events and the WCH of that season.

15.8.3.2 Nations Cup Score

Scoring of the Nations Cup will be based on all of the WC and WCH Individual, Sprint, Mixed Relay and Relay competitions of that season.

15.8.4 Calculation

15.8.4.1 World Cup Total Score

For all competitors, the World Cup total score will be based on the Individual, Sprint, Pursuit and Mass Start competitions. The scores from all competitions will be added together minus the two lowest scores and the sum will be the WC total score.

15.8.4.2 World Cup Individual, Sprint, Pursuit, Mass Start, Relay and Mixed Relay Score

The WC score of each of the types of the competitions will be calculated the same way by adding together the scores of all the competitions of each type. A minimum of two competitions must be scored in a single season for a cup to be awarded.

15.8.4.3 Nations Cup Score

The NFs' best three competitors earn Nations Cup points in Individual and Sprint competitions. The sum of these points will become the NF's Nations Cup score for that competition. The Relay and applicable Mixed Relay Nations Cup points will be added to those from the Individual and Sprint; the ranking of the cumulative sum of all the scored events in the current season will become the respective NF's ranking.

15.8.5 Breaking of Ties in Standings

If there is an equal number of points in any standings during or at the end of the season, the best placed competitor or NF will be the one who

won more first places, and if there is still a tie, who won the most second places, etc. If, after following this procedure, the tie cannot be broken, a tie will be declared.

15.8.6 World Cup Score

15.8.6.1 Current Standings

After each WC and WCH competition, the OC of the event must ensure that a World Cup current standing list containing the results of that and the preceding competitions is compiled and distributed to each participating NF.

15.8.6.2 Final Score

The OC of the World Cup Final must ensure that a final list of all the World Cup and Nations Cup scores is compiled.

15.9 Awards

15.9.1 General

World Cup trophies will be awarded at the end of the competition season based on the World Cup score final standings.

15.9.2 Award Categories

The World Cup trophies will be awarded to:

a. the man and woman placed first in the World Cup total score;

b. the man and woman placed first in the World Cup Individual score;

c. the man and woman placed first in the World Cup Sprint score;

d. the woman and man placed first in the World Cup Pursuit score;

e. the woman and man placed first in the World Cup Mass Start score;

f. the NFs placed first in the men's and women's World Cup Relay score;

g. the NFs placed first in the World Cup Mixed Relay score;

h. the NFs placed first in the women's and men's World Cup Nations score.

15.9.3 Right to Retain Trophies

World Cup trophies may be retained as follows:

a. The World Cup trophies awarded for the WC total, Individual, Sprint, Pursuit and Mass Start scores will become the property of the winners.

b. The World Cup trophies awarded for the World Cup Relay and Mixed Relay score will become the property of that NF.

c. The Cup for the World Cup nations score is a perpetual challenge cup that will be retained by the IBU. Miniature cups, for retention by the winning NFs, will be awarded every year.

15.9.4 Provision of Trophies

The World Cup trophies and certificates will be provided by and at the expense of the IBU.

15.9.5 World Cup and Nations Cup Certificates

The IBU will present a certificate to the top -10 competitors and NFs according to the World Cup total score and Nations Cup. In each type of competition the IBU will present a certificate to the top placed competitor at the end of a competition season. The presentations will take place during the WC Final at a suitable occasion.

15.9.6 Other Prizes

OCs and other bodies may present other prizes.

15.9.7 Prize Money

Prize money is permitted in amounts as directed by the IBU EB.

16. IBU CUP – EVENT RULES

16.1 General

IBU Cups are IBU events that, as a general rule, are held for men and women. Juniors may compete as stipulated in Art. 1.2.2. Youth athletes are entitled to start in the IBU Cup, if:

a. they have achieved the WC or IBU Cup qualification in the previous or current season or

b. they have achieved at least one result among the top half of the finishers at the Youth or Junior WCH, Junior IBU Cup, WC, WCH, OECH, YOG or EYOF in the previous or current season.

The number of IBU Cup events in each competition season will be set by the IBU Executive Board upon the recommendation of the TC. The TC will make recommendations to the EB. The EB will decide how many and what

types of competitions will be organized at an event. This information will be included in the IBU Biathlon Guide. IBU Cup points will be awarded at the OECH.

Immediate effect for season 2016/2017

16.2 Registration and Entry Quotas

NFs may participate with the following quota of male and female competitors respectively at IBU Cup event individual and sprint competitions, based on the NF's ranking in the previous season's IBU Cup Nations Cup score final standings:

IBU CUP RANKING	REGISTER	START	MAXIMUM ON START
1 to 5	8	6	30
6 to 10	7	5	25
11 to 20	6	4	40
21 and above	5	3	(60)
			Total 155

Immediate effect for season 2016/2017

16.2.1 General:

In each IBU Cup trimester, each competitor must score 250 IBU qualifying points or less at least once, or have 250 points or less on the IBU qualifying points list, and demonstrate safe competence in skiing and on the shooting range. Competitors who fail to reach this quality performance standard may not start in the IBU Cup until the second following trimester unless they have currently qualified for the WC. Youth class competitors may start in the IBU Cup, however only as stipulated in Art. 16.1 above.

Immediate effect for season 2016/2017

16.2.2 IBU Cup for non-European countries:

All non-European NFs will have an IBU Cup start quota of 4 (four) and may register 6 (six), unless they are entitled to more according to Art. 16.1 above.

16.3 Competitors and Entries

The Host NF may register 8 (eight) and start 6 (six) per gender. All entered competitors will be eligible to earn IBU Cup points.

16.4 Scoring

At IBU Cups and the OECH, IBU Cup points are awarded.

16.4.1 IBU Cup Discipline Points

At the OECH and IBU Cup Individual, Sprint, and Pursuit competitions, points will be awarded for each discipline as follows:

1st place	60 points	2nd place	54 points
3rd place	48 points	4th place	43 points
5th place	40 points	6th place	38 points
7th place	36 points	8th place	34 points
9th place	32 points	10th place	31 points
further decreasing by one down to 40th place (1 point).			

At Mass Start competitions, points will be awarded as follows:

1st place	60 points	2nd place	54 points
3rd place	48 points	4th place	43 points
5th place	40 points	6th place	38 points
7th place	36 points	8th place	34 points
9th place	32 points	10th place	31 points
further decreasing by one down to 21st place (20 points) and then decreasing by two points down to 30th place (2 points).			

16.4.2 IBU Cup Nations Cup Points

Nations Cup points are awarded separately for men and women. At the OECH and IBU Cup Individual and Sprint competitions, the following points are awarded:

1st place	160 points	2nd place	154 points
3rd place	148 points	4th place	143 points
5th place	140 points	6th place	138 points
7th place	136 points	8th place	134 points

9th place	132 points	10th place	131 points
and then decreasing by one point down to 80th place and then decreasing by 2 points thereafter with one point awarded for 110th place and higher.			

At each OECH and IBU Cup Relay competition, the following Nations Cup points will be awarded:

1st place	420 points	2nd place	390 points	3rd place	360 points
4th place	330 points	5th place	310 points	6th place	290 points
7th place	270 points	8th place	250 points	9th place	230 points
10th place	220 points	11th place	210 points	12th place	200 points
13th place	190 points	14th place	180 points	15th place	170 points
16th place	160 points	17th place	150 points	18th place	140 points
19th place	130 points	20th place	120 points	21st place	110 points
22nd place	100 points	23rd place	90 points	24th place	80 points
25th place	70 points	26th place	60 points	27th place	50 points
28th place	40 points	29th place	30 points	30th place	20 points

For the Mixed Relay and the Single Mixed Relay, half the Relay Nations Cup points will be awarded to each gender.

16.5 Types of Scoring

The following types of scoring are used for men and women:

a. IBU Cup total score (Individual, Sprint, Pursuit & OECH Mass Start);

b. IBU Cup Individual score;

c. IBU Cup Sprint score;

d. IBU Cup Pursuit score;

e. IBU Cup Relay score (including all types of relays);

f. IBU Cup Nations Cup score (Individual, Sprint, Relay, Mixed Relay).

16.5.1 Calculation

16.5.1.1 IBU Cup Total Score

For all competitors, the IBU Cup total score will be based on the Individual, Sprint, Pursuit, and OECH Mass Start competitions. The scores from all OECH and IBU Cup competitions will be added together minus the two lowest scores, giving the IBU Cup total score.

16.5.1.2 IBU Cup Individual, Sprint, Pursuit and Relay Score

The IBU Cup score of each of the types of the competitions will be calculated the same way by adding together the scores of all the competitions of each type. A minimum of two competitions must be scored in a single season for a Cup to be awarded.

16.5.1.3 IBU Nations Cup Score

The NFs' best three competitors earn IBU Cup Nations Cup points in Individual and Sprint competitions at the OECH and the IBU Cup. The Relay and applicable Mixed Relays Nations Cup points will be added to those from the Individual and Sprint; the ranking of the cumulative sum will become the respective NF's ranking, minus the single lowest score from any Relay and the single lowest score from an Individual or Sprint competition.

16.5.1.4 Breaking of Ties in Standings

If there is an equal number of points in any standings during or at the end of the season, the best placed competitor or NF will be the one who has won more first places, and if there is still a tie, who has won the most second places, etc. If, after following this procedure, the tie cannot be broken, a tie will be declared.

16.6 Awards

16.6.1 The competitors placed first in the competitions listed under Art. 16.5 a–e will be awarded an IBU Cup Trophy.

16.6.2 The IBU Cup Trophies will be paid for by the IBU.

16.7 Competition Rules

16.7.1 Scope

The IBU Event and Competition Rules apply to IBU Cup events; however, exceptions may be stipulated.

16.8 Relay/Mixed Relay Teams at IBU Cup

Each NF is allowed to enter one team. No draw will be made for the Relay, and start numbers will be assigned based on the NF's current men's or women's IBU Cup Nations Cup score respectively, with the start numbers assigned in rank order. For the Mixed Relays, start numbers will be assigned based on the sum of the NF's current men's and women's IBU Cup Nations Cup score, with the start numbers assigned in rank order. If a team is missing or not entered, all teams below it will move up a number correspondingly.

During trimester 1 of each season, the respective final NC Score of the previous season will apply – for both Relay and Mixed Relay start orders.

The assigned Relay/Mixed Relay/Single Mixed Relay start number will be each team's start position for the simultaneous start and their shooting lane number on the range for zeroing and for the first bout of shooting only.

In case there are more than 30 relay teams, the best teams from the respective NC Scores are qualified in rank order. If there are still free start positions, these can be filled up with unranked NFs; their start position will be determined by a simple jury draw.

17. OPEN EUROPEAN CHAMPIONSHIPS (OECH)

17.1 Jurisdiction and Terms

The OECH is an IBU event and is held under its jurisdiction for men and women.

17.2 Eligibility

As a general rule, OECH are held for men and women. Juniors may compete as stipulated in Art. 1.2.2. Youth athletes are entitled to start in the IBU Cup, if:

a. they have achieved the WC or IBU Cup qualification in the previous or current season or

b. they have achieved at least one result among the top half of the finishers at the Youth or Junior WCH, Junior IBU Cup, WC, WCH, OECH, YOG or EYOF in the previous or current season. IBU Cup points will be awarded at the OECH. Athletes who have not earned the right to start in the respective IBU Cup trimester under Art. 16.2.1 may nevertheless compete at the OECH.

17.3 Participants, Registration and Entry

Competitors must be members of an IBU NF. All NFs of the IBU may register up to seven competitors in each class to participate in the OECH. Six competitors from each NF may be entered to start in the individual and sprint competitions per class. Each NF may enter one relay team per class in the relay competition. The 60 best competitors from each class in the qualification competition will be eligible to start in the pursuit competition. Additionally, the NFs of the individual, sprint and mass start champions from the previous year's OECH will be granted the right to enter them at the respective OECH individual and sprint competitions, in addition to their NF's quota. The Mass Start entry list will be made in rank order from

a) the TOP 10 athletes from the current IBU Cup Total Score

b) the medal winners of the current OECH (if not already qualified)

c) the rest of the field will be filled in rank order with athletes having earned the highest sum of the IBU Cup points at the OECH.

d) In addition, the previous year´s OECH Mass Start Champion will be allowed to start and will receive start number 30.

If athletes qualified according to a), b) or d) are not present/do not intend to start, those free starting places will be filled in with athletes from point c).

17.4 Competition Program

The competition program may consist of the Individual, Sprint, Pursuit and Mass Start for men and women, and Relay or Mixed Relays.

17.5 Event and Competition Rules

17.5.1 Scope

The IBU Event and Competition Rules will apply to the OECH with the following deviations:

17.5.2 Classes of Competitions

OECH events consist of competitions for men and women.

17.5.3 Scoring

IBU Cup Points and IBU Nations Cup Points will be awarded at the OECH in the same manner they are for IBU Cup events.

17.5.4 Awards

The rules for WCH events under Art. 12.7 will apply accordingly.

18. IBU JUNIOR CUP

18.1 General

The IBU Junior Cup is an IBU competition series for junior-class competitors. Youth-class athletes may compete if they start as junior-class competitors and meet the requirements for competing as juniors.

18.2 Events and Competitions

All IBU member federations may apply to host IBU Junior Cup events. Venues with an IBU License are preferred, but a license is not required. The IBU EB will schedule up to four IBU Junior Cup events per season based on recommendations from the IBU TC. The last IBU Junior Cup is conducted as Junior European Championships. Each event should contain two or three competitions from among Individual, Sprint, Pursuit and Relay.

With the approval of the IBU, in exceptional cases, Regional Cups may be held at the same time and at the same host venue as IBU Junior Cup events. However, if this is the case, junior-class athletes will take priority to participants competing in the Regional Cup.

18.3 Competitors and Entry

Each IBU member federation may register and enter five (5) female and five (5) male athletes. The host nation and those nations who ended the previous season ranked in the top 10 in the Nations Cup score of either the WC or IBU Cup may enter an additional two (2) male and two (2) female athletes.

18.4 Scoring

IBU Junior Cup points are awarded at each IBU Junior Cup and the JWCH in the same manner as IBU Cup points are awarded at the IBU Cup.

18.4.1 Score types

The following types of scoring are used:

a) Total score (Individual, Sprint, Pursuit);

b) Individual score;

c) Sprint score;

d) Pursuit score.

18.4.1.1 Total score

The two lowest scores will be subtracted from the sum total of all points gained in competitions listed under Art. 18.4.1 above.

18.4.1.2 Individual, Sprint and Pursuit score

The scores for the Individual, Sprint and Pursuit disciplines are calculated by adding up the points gained in all competitions in the respective discipline.

18.5 Prizes

Each athlete first placed in the competitions listed under Article 18.4.1 a) - d) above will receive an IBU Junior Cup trophy.

18.6 Competition Rules

18.6.1 General

The IBU Event and Competition Rules apply to the IBU Junior Cup in general, except where other provisions are stated.

18.6.2 Pursuit

Lapped competitors may continue until the finish.

18.6.3 Zeroing and training

Shooting lanes for zeroing and training will be allocated according to the NC results in the Senior IBU Cup.

19. ENTRY INTO FORCE

The IBU Event and Competition Rules were adopted by the 1998 Congress and amended by the 2000, 2002, 2004, 2006, 2008, 2010, 2012, 2014 and 2016 Congresses.

IBSF
INTERNATIONAL BOBSLEIGH & SKELETON FEDERATION

International Bobsleigh Rules

2015

Table of Contents

1. IBSF COMPETITIONS 7
   1.1 *Olympic Winter Games* 7
      1.1.1 Senior Olympic Winter Games 7
      1.1.2 Youth Olympic Winter Games 7
   1.2 *Championships* 7
      1.2.1 Senior World Championships 7
      1.2.2 Junior World Championships 7
      1.2.3 Continental Championships 7
   1.3 *Official IBSF Competitions* 7
      1.3.1 World Cup Competitions 7
      1.3.2 Intercontinental Cup Competitions 7
      1.3.3 Europe Cup and North American Cup Competitions 7
      1.3.4 International Competitions 7
   1.4 *Test Competitions and Training Week* 7
   1.5 *Allocation of Competitions* 8
   1.6 *Gender* 8
2. DISCIPLINES 9
   2.1 *Men's Bobsleigh* 9
      2.1.1 2-man Bobsleigh 9
      2.1.2 4-man Bobsleigh (Men and/or Women) 9
   2.2 *Women's Bobsleigh* 9
      2.2.1 2-man Bobsleigh 9
   2.3 *Team Competition* 9
      2.3.1 Men: One 2-man Bobsleigh and one Skeleton 9
      2.3.2 Women: One 2-man Bobsleigh and one Skeleton 9
   2.4 *Other Disciplines* 9
      2.4.1 Monobob 9
      2.4.2 Para Bobsleigh 9
      2.4.3 Combined Event 9
      2.4.4 Knockout System 9
3. ADMISSION 9
4. RIGHT TO PARTICIPATE IN COMPETITIONS 10
   4.1 *Olympic Winter Games* 10
   4.2 *Senior World Championships* 10
      4.2.1 Requirements for participation in the Senior World Championships: 10
   4.3 *Junior World Championships* 10
      4.3.1 Requirements for participation in the Junior World Championships: 10
   4.4 *Continental Championships* 10
      4.4.1 Requirements for participation in the Continental Championships: 11
   4.5 *World Cup and Intercontinental Cup* 11
      4.5.1 World Cup 11
      4.5.2 Intercontinental Cup 11
      4.5.3 Requirements for participation in the World Cups and Intercontinental Cups: 11
   4.6 *Europe Cup and North American Cup* 11
   4.7 *International Competitions* 11
5. EVENT 12
   5.1 *General* 12
   5.2 *Costs* 12
   5.3 *Track* 12
   5.4 *Event Announcements and Invitations* 12
   5.5 *Organising Committee and Race Director* 12
   5.6 *Technical Equipment* 13
   5.7 *Liability Insurance* 13
   5.8 *Further Obligations of the Organiser* 13
6. JURY AND TECHNICAL DELEGATES 13
   6.1 *Jury License* 13

6.2 License for Material Controls ... *13*
6.3 Nomination ... *14*
6.3.1 Olympic Winter Games ... 14
6.3.2 Senior World Championships ... 14
6.3.3 Junior World Championships, Continental Championships, World Cup and Intercontinental Cup ... 14
6.3.4 Europe Cup and North American Cup ... 14
6.3.5 International Competitions ... 14
6.4 Authority ... *14*
6.4.1 Jury ... 14
6.4.2 Technical Delegates ... 15
6.4.3 Attendance ... 15
6.4.4 Expenses ... 15
6.4.5 Authority to Inspect ... 15
6.4.6 Special Decisions ... 15
7. RACE DIRECTOR ... 15
7.1 Appointment ... *15*
7.2 Duties ... *15*
8. GENERAL REGULATIONS ... 16
8.1 Sporting Year ... *16*
8.2 Liability ... *16*
8.3 Amateurism Rules ... *16*
8.4 Licenses ... *16*
8.5 Insurance ... *16*
8.6 Entries ... *16*
8.7 Acceptance of the International Rules ... *17*
8.8 Track Records and Start Records ... *17*
8.9 Doping Controls ... *17*
8.10 Rule Violations ... *17*
8.10.1 Athlete Support Person Rule Violations ... 18
8.10.2 Prohibited Association ... 18
8.10.3 Burden of Proof ... 18
8.11 Sponsorship and Advertising ... *18*
8.12 Trademarks on Equipment ... *18*
8.12.1 IBSF Properties ... 18
8.12.2 Freely Available Advertising Areas ... 18
9. MEDICAL SERVICE AT THE TRACK ... 19
9.1 Race Doctor ... *19*
9.2 Team Doctor ... *19*
9.3 Evacuation of injured athletes ... *19*
10. THE COMPETITION ... 20
10.1 Official Training ... *20*
10.1.1 Olympic Winter Games and Senior World Championships ... 20
10.1.2 Continental Championships, World Cup and Intercontinental Cup ... 20
10.1.3 Junior World Championships, Europe Cup and North American Cup ... 20
10.1.4 International Competitions ... 20
10.2 Starting Order During Training ... *21*
10.3 Track Conditions During Training ... *21*
10.4 Start Grooves ... *21*
10.5 Replacement of Athletes ... *21*
10.6 The Race ... *22*
10.6.1 Race Heats ... 22
10.6.2 Starting Order ... 22
10.6.3 Starting Order System ... 22
10.6.4 Start Number ... 22
10.6.5 Teams and Manner of Driving ... 23
10.6.6 Track Conditions During the Race ... 23
10.6.7 Track Walks ... 23
10.6.8 Start ... 23
10.6.9 Reduction ... 23

10.6.10 Interruption or Cessation ... 23
10.6.11 Repetition of a Heat ... 23
10.6.12 Replacement Races ... 24
10.6.13 Pilot Sleds ... 24
10.6.14 Time Measurement ... 24
10.7 Parc Fermé ... 24
10.8 Material and Equipment ... 24
10.8.1 Sled ... 24
10.8.2 Runners ... 24
10.9 Technical Inspections ... 25
10.10 Runner Radius ... 26
10.11 Measurement of Runner Temperatures ... 26
10.12 Reference Runner ... 26
10.13 Runner Cleaning ... 26
10.14 Weight ... 27
10.15 Electronic Measuring Devices and Equipment ... 27
10.16 Other Equipment ... 27
10.16.1 Helmet ... 27
10.16.2 Shoes ... 28
10.16.3 Clothing ... 28
10.17 Awards ... 28
10.17.1 IBSF Championships ... 28
10.17.2 Official IBSF Competitions ... 28
10.18 Awards Ceremony ... 28
10.19 Protests ... 28
11. RANKING LISTS ... 28
11.1 Ranking List of the Race Series ... 28
11.2 IBSF Ranking List ... 29
12. FINAL CLAUSES ... 29
12.1 Coming into Force ... 29
12.2 Modifications ... 29
12.3 Interpretation ... 29
13. APPENDIX 1: IBSF RANKING LIST "A" ... 30
14. BOBSLEIGH CONSTRUCTIONS ... 31
14.1 Principles and Properties ... 31
14.1.1 Purpose of the Rules of 14.1 ... 31
14.1.2 Principles ... 31
14.1.3 Bobsleigh Properties ... 31
14.2 Bobsleigh Construction and Functioning ... 32
14.2.1 Purpose of Rules of 14.2 ... 32
14.2.2 General structure and Functioning ... 32
14.2.3 Frame and Running Gear ... 33
14.2.4 Cowling ... 38
14.2.5 Connection between Frame and Cowling ... 39
14.2.6 Bumpers ... 40
14.2.7 Runners ... 41
14.2.8 Detachable, moveable and/or adjustable parts ... 43
14.3 Miscellaneous ... 44
14.3.1 Purpose of 14.3 ... 44
14.3.2 Principles and properties ... 44
14.3.3 List of Drawings and Figures ... 44
15. DRAWINGS ... 46
15.1 APPENDIX 3: MATERIAL SEIZURE ... 58
15.2 The Form ... 58
15.3 The Container ... 58
15.4 Remarks ... 58
16. APPENDIX 4: THE TRACK ... 60
16.1 Scope ... 60
16.2 Environmental Protection ... 60

16.3 Technical Commission ... 60
16.4 Preparatory Phase of Design ... 60
16.5 Design in General ... 60
16.6 Location of the Track ... 60
16.7 Length of the Track ... 60
16.8 Track Characteristics ... 61
16.9 Starting Area: Bobsleigh and Skeleton ... 61
16.9.1 Push-Off Stretch ... 61
16.9.2 Start Block (Wooden Board) ... 61
16.9.3 Starting Area ... 61
16.9.4 Preparation ... 61
16.9.5 Start Procedure Time Limit ... 61
16.10 Luge Start ... 61
16.10.1 General Aspects ... 61
16.10.2 Starting Zone ... 61
16.10.3 Push-Off Grips ... 62
16.10.4 Starting Stretch ... 62
16.11 Bends ... 62
16.12 Guardrails in Bends ... 62
16.13 Centrifugal Force ... 62
16.14 Straights ... 62
16.15 Deceleration Stretch ... 63
16.16 Lighting ... 63
16.17 Solar and Weather Protection Devices ... 63
16.18 Water Supply ... 63
16.19 Catwalks ... 63
16.20 Infrastructures - Ancillary Facilities ... 63
16.21 Buildings at the Start and Finish ... 64
16.22 Partitioning of Costs ... 64
16.23 Exceptions ... 64
16.24 Homologation ... 64
17. APPENDIX 5: ADVERTISING GUIDELINES AND DRAWINGS ... 65
18. APPENDIX 6: THE IBSF AND THE ENVIRONMENT ... 67
18.1 Our Events ... 67
18.2 Seven steps to greening your event ... 67
18.2.1 Adopt a green policy ... 67
18.2.2 Carry out an 'Environmental Scoping Review' of venues and operations ... 67
18.2.3 Establish environmental teams ... 67
18.2.4 Define programmes and set appropriate targets ... 68
18.2.5 Implement programmes ... 68
18.2.6 Monitor implementation and adjust programme accordingly ... 68
18.2.7 Evaluate and publicise results ... 68
18.3 Action Plan ... 68
18.3.1 The impact of our sport ... 68
18.3.2 The Facility ... 68
18.4 Areas of action ... 69
18.4.1 Location and landscaping ... 69
18.4.2 Environmental elements to consider when choosing a location for sports venues are: ... 69
18.4.3 Natural resources: ... 69
18.4.4 Natural elements: ... 69
18.4.5 Perceptual elements: ... 69
18.4.6 Detailed planning, once the site location has been selected: ... 70
18.5 Sport facilities ... 70
18.5.1 Planning phase ... 70
18.5.2 Detailed planning ... 70
18.5.3 Construction phase ... 71
18.5.4 Operational phase ... 71
18.5.5 Sports equipment ... 71
18.5.6 Transportation ... 72

18.5.7 Energy 72
18.5.8 Accommodation and catering 73
18.5.9 Water management and sanitation 73
18.5.10 Waste management 74
18.6 Large-scale Sports Events: Specific Recommendations 74
18.6.1 Sports facilities 74
18.6.2 Transportation and air quality 74
18.6.3 Energy 75
18.6.4 Waste management 75
18.6.5 Environmental message to the public 75
18.6.6 Finances 75

1. IBSF COMPETITIONS

The IBSF competitions consist of the following events:

1.1 Olympic Winter Games

1.1.1 Senior Olympic Winter Games

1.1.2 Youth Olympic Winter Games

1.2 Championships

1.2.1 Senior World Championships

1.2.2 Junior World Championships

1.2.3 Continental Championships

1.3 Official IBSF Competitions

1.3.1 World Cup Competitions

1.3.2 Intercontinental Cup Competitions

1.3.3 Europe Cup and North American Cup Competitions

1.3.4 International Competitions

1.4 Test Competitions and Training Week

The Organisers of IBSF competitions to be staged on newly constructed tracks shall offer all Members enough training periods for their men's and women's bob teams in advance, during the preceding season, respectively during the same season of the competition within the same season.

Training runs prior to races are to be offered also on any tracks that have been subject to constructional changes.

The Organisers of the Winter Olympic Games to be staged on newly constructed tracks shall offer a number of at least 40 training and competition runs prior to the Games to all Members. These training runs and competition runs must be offered in the form of two or more International Training periods and/or test events, scheduled throughout the season.

Prior to the Games, the Organisers must also hold at least one test competition.

The quotas for participation in the International Training periods are the same as for the World Cup of the season in which the International Training periods are held.

All remaining Nations, which have no quotas for the participation in the World Cup, have the right to participate in the International Trainings periods with 1 men's bob team and 1 women's bob team, provided that their pilots (male pilots and female pilots) have taken part in and been ranked in, a minimum of 5 IBSF competitions on a minimum of 3 different tracks in the course of the previous 24 months.

Participation in 2-man bob events counts only for 2-man bob while participation in 4-man bob events counts only for 4-man bob.

The crews that do not have the right to compete in the World Cup, may not participate in the ''Test event'' but they can train during this time.

Moreover, for reasons of fairness and safety, immediately prior to the start of official training for the Olympic competitions (whether before or after the Opening Ceremony), the men's and women's bob teams registered for the Games must be given the possibility of at least 4 additional training runs.

Male and female pilots who in the previous and/or current season placed in the top 15 of the IBSF rankings for discipline and Combined cannot do additional training runs beyond the number prescribed by the present Article. This does not apply to athletes from the host country.

Moreover, the Organiser of the trainings periods and Text Event must grant that all participating athletes and their assistants/coaches will be provided with lodging in at least a three star hotel, full board, (bed + 3 meals) at a maximum price of 80 Euros per day.

The Organisers of the World Championships must offer an International Training period, to prepare for the championships and it must take place during the same competitive season in which the World Championships are organised. They are exempt from doing this if during the preceding competitive season a World Cup competition had been organised on the same track

During the periods in preparation for the Winter Olympic Games and/or World Championships, the Organiser shall offer training runs upon payment of the following amounts: a maximum of €15 for each 2-man bobsleigh training run and a maximum of €25 for each 4-man bobsleigh training run. At least 6 training runs in 2-man bobsleigh and 6 training runs in 4-man bobsleigh shall be offered.

If the training week is to be staged as a test competition, the Organiser must offer the runs free of charge.

However, the Organiser may require payment of the entry fee.

1.5 Allocation of Competitions

a) World Championships

The Congress assigns the World Championships to the respective Member Federations a maximum of four years in advance upon written application.

b) Official IBSF Competitions

The remaining official IBSF competitions are assigned yearly by the IBSF Executive Committee, and must be listed on the IBSF International Calendar.

1.6 Gender

If the IBSF International Rules do not explicitly indicate the gender, they apply to both men's and women's bobsleigh.

2. DISCIPLINES

The following disciplines are contested:

2.1 Men's Bobsleigh

2.1.1 2-man Bobsleigh

2.1.2 4-man Bobsleigh (Men and/or Women)

2.2 Women's Bobsleigh

2.2.1 2-man Bobsleigh

2.3 Team Competition

2.3.1 Men: One 2-man Bobsleigh and one Skeleton

2.3.2 Women: One 2-man Bobsleigh and one Skeleton

2.4 Other Disciplines

2.4.1 Monobob

2.4.2 Para Bobsleigh

2.4.3 Combined Event

2.4.4 Knockout System

3. ADMISSION

The right to participate in championships and official IBSF competitions is reserved only for teams registered by Members, i.e. teams from

- MEMBERS or
- ASSOCIATE MEMBERS.

The athletes must fulfill one of the following conditions:

- They must hold citizenship of the nation of the Member or Associate Member concerned, and may not have taken part in international IBSF competitions on behalf of another Member /Associate Member, or
- They must have their official residence in the Member/Associate Member concerned, and may not have taken part in international IBSF competitions on behalf of another Member/Associate Member, or
- They must have changed their citizenship or their official residence, and have been released by their former Member/Associate Member and accepted by their member. In this case, the athlete may represent one of the two members, but not both.

An athlete may represent only one nation during any competition season, which lasts from October 1 to September 30 of the following year.

Applications to change Member may only be submitted between April 01 and September 30 of each year.

When athletes switch Nations, they keep their Scores/Ranking in the IBSF Ranking List, as well as the number of competitions in which they have participated; however, they do not keep the right to the previous quotas for participation, which remains tied to the nation of origin

4. RIGHT TO PARTICIPATE IN COMPETITIONS

4.1 Olympic Winter Games

The criteria for the right to participate in the Olympic Winter Games are determined by the IOC. The qualification rules are determined by the IOC in collaboration with the IBSF. The qualification rules are communicated directly by the IOC to all National Olympic Committees.

4.2 Senior World Championships

The Senior World Championships take place annually, with the exception of the Olympic year. Quotas are based on the current IBSF Discipline Ranking List.
The quotas for participation in the Senior World Championships are as follows:

Men:	Nations with 3 teams in the Top 25: 3 starting places
	Nations with 2 teams in the Top 50: 2 starting places
	Nations with 1 team in the Top 55: 1 starting place
	All remaining nations with 1 team
Women:	Nations with 3 teams in the Top 25: 3 starting places
	Nations with 2 teams in the Top 35: 2 starting places
	Nations with 1 team in the Top 40: 1 starting place
	All remaining nations with 1 team

4.2.1 Requirements for participation in the Senior World Championships:

Only those pilots can take part who have been participating and ranked in a minimum of 5 IBSF races on at least 3 different tracks in the 24 months prior to the competition. In addition the pilot must have been ranked in at least 3 of the 5 above mentioned races on a minimum of 2 different tracks during the on-going season. Participation in 2-man bobsleigh competitions counts only for 2-man bobsleigh, while participation in 4-man bobsleigh competitions counts only for 4-man bobsleigh.
The defending Junior World Champion team is also entitled to participate.

4.3 Junior World Championships

The Junior World Championships take place annually. Only athletes from the Junior category may participate. All National Federations may participate with a maximum of 3 teams.

4.3.1 Requirements for participation in the Junior World Championships:

Participation is allowed only for pilots who have taken part in, and been ranked in, a minimum of 3 IBSF competitions on a minimum of 2 different tracks in the course of the previous 24 months. Participation in 2-man bobsleigh competitions counts only for 2-man bobsleigh, while participation in 4-man bobsleigh competitions counts only for 4-man bobsleigh.
Juniors are athletes who have not yet reached the age of 26 years on the date of the Junior race. Furthermore, Juniors are all those athletes who reach the age of 26 years in the period of October 1 to March 31 of the current season.

4.4 Continental Championships

The quotas for participation in the Continental Championships are identical to those of the World Cup if the Championships are held within the course of a World Cup competition. Nations of the respective continent that are not qualified to participate in the World Cup have the right to participate with one team. These teams are ranked only in the Continental Championships and shall receive no World Cup points. They will start at the end of the field according to their IBSF ranking by discipline. Teams with

no points will be drawn. They are drawn separately at the end of the field of competitors. In the second race heat, they start according to their ranking after the first heat.

4.4.1 Requirements for participation in the Continental Championships:

Participation is allowed only for pilots who have taken part in, and been ranked in, a minimum of 5 IBSF competitions on a minimum of 3 different tracks in the course of the previous 24 months. Participation in 2-man bobsleigh competitions counts only for 2-man bobsleigh, while participation in 4-man bobsleigh competitions counts only for 4-man bobsleigh.

4.5 World Cup and Intercontinental Cup

Quotas for the new season are based on the final results of the previous year's Combined IBSF Ranking List.
The Combined IBSF Ranking List includes only those pilots who competed both in the two-man and four-man bob.

4.5.1 World Cup

The quotas for participation are determined as follows:

Men:	Nations with 3 teams in the Top 25: 3 starting places
	Nations with 2 teams in the Top 50: 2 starting places
	Nations with 1 team in the Top 55: 1 starting place
Women:	Nations with 3 teams in the Top 25: 3 starting places
	Nations with 2 teams in the Top 35: 2 starting places
	Nations with 1 team in the Top 40: 1 starting place

4.5.2 Intercontinental Cup

The quotas for participation are determined as follows:

Men:	4 nations with 3 teams
	6 nations with 2 teams
	all remaining nations with 1 team
Women:	Competitions not held

4.5.3 Requirements for participation in the World Cups and Intercontinental Cups:

Participation is allowed only for pilots who have taken part in, and been ranked in, a minimum of 5 IBSF competitions on a minimum of 3 different tracks in the course of the previous 24 months. Participation in 2-man bobsleigh competitions counts only for 2-man bobsleigh, while participation in 4-man bobsleigh competitions counts only for 4-man bobsleigh.

4.6 Europe Cup and North American Cup

All nations may participate and score points with a maximum of 4 teams.
The pilots (male and female) placed among the top 12 of the current IBSF discipline ranking will not be admitted either to the Europe Cup races or to the North American Cup races, unless the respective nation uses its entire WC quota.

4.7 International Competitions

The Organiser establishes the right to participate in the event announcement.

5. EVENT

5.1 General

Only the IBSF, as well as its Members and Associate Members, have the right to organise international competitions.
All official international IBSF competitions shall be organised under the supervision of the IBSF. The IBSF shall award the competition to a Member or Associate Member that is able to undertake the organisation of the competition, or is able to pass it on to an association (Club) or an Organising Committee. The Member or Associate Member remains responsible for the orderly execution of the event.

5.2 Costs

The Organiser to whom the organisation of the event has been awarded assumes the entire organisation and its costs.

5.3 Track

The Organiser shall make the track available in the best possible condition for the official training and the race. The usage of the track during the official training and the race is free of charge.

5.4 Event Announcements and Invitations

The Organiser of the competition shall be responsible for the event announcements and invitations.
The Organiser must present the official event announcement with the program schedule to the IBSF Executive Committee for approval by August 15.
The Organiser must send the program schedule to the Member Federations and the appointed Jury Members within two weeks of receiving the approval of the IBSF
The event announcement must include:

- The name of the competition
- The location and date of the competition
- A schedule for the official training and the race
- A short description of the track, including a sketch of the track
- The entry deadline
- The address of the Organising Committee with exact office times, telephone number, fax number and e-mail address
- The name of the Chief of Organisation
- The name of the Race Director
- The names of the Jury Members and the Technical Delegate, if any
- Information about facilities, benefits and hotel accommodations
- Any conditions of entry
- The location and time of the first team captains' meeting

5.5 Organising Committee and Race Director

An Organising Committee and a Race Management Office shall be formed in order to guarantee the orderly execution of the event.
The Race Director must possess an IBSF International Jury License. He is responsible for ensuring that the entire event is carried out in accordance with the IBSF International Rules. He shall ensure that skilled and responsible people hold all the important positions in order to assure the smooth progression of the event. Furthermore, he is obliged to ensure that the track is in perfect condition and that the safety of the athletes, coaches and spectators is guaranteed.

5.6 Technical Equipment

- Voice communication among the start, the finish and the timekeepers
- Voice communication between the Race Director and the Jury
- Numerous loudspeakers
- At least two calibrated instruments for measuring runner temperature
- An electronic timing system
- A room for team captains' meetings
- Sufficient changing rooms and sanitary facilities
- A weigh scale, calibrated every year,
- Sufficient transport vehicles
- A first aid room
- Medical service
- A doping control room
- Video surveillance on the track
- A room suitable for technical inspections of sleds and runners
- A suitable room, possibly next to the start, equipped with Internet connection for the Jury
- Sufficient computers and photocopiers
- A score board
- Optical and acoustic devices to authorize the start

5.7 Liability Insurance

The Organiser is obliged to obtain sufficient public liability insurance.
The insurance must cover the IBSF staff involved in the respective competition.

5.8 Further Obligations of the Organiser

The obligations of the Organiser of IBSF competitions are specified in writing within the framework of a contract that is negotiated between the IBSF and the Organiser's National Federation.
Race results must be forwarded to the media and the IBSF immediately after the conclusion of the event. Training and race results must be distributed to the team captains as quickly as possible. If possible, the results should also be accessible online.

6. JURY AND TECHNICAL DELEGATES

6.1 Jury License

The Jury Members and Technical Delegates, appointed by the IBSF Executive Committee, must possess an IBSF International Jury License in order to officiate. Each National Federation has the right to recommend people suitable for obtaining an IBSF International Jury License.
This License can be acquired after taking an examination on the IBSF International Rules for Bobsleigh and Skeleton. In principle, the examinations take place two times per year, on the occasion of the Senior World Championships and of a World Cup competition on a different continent. The respective National Federations must register potential candidates with the IBSF General Secretary in advance (at least one-month prior).

6.2 License for Material Controls

In order to be allowed to execute their office, the Material Controllers appointed by the Executive Committee must have an International Material Controller License of the IBSF. Each National Federation has the right to propose candidates who are eligible to obtain the International Material Controller License of the IBSF. The examinations will be held as specified by IBSF announcement. The

respective National Federations must register potential candidates with the IBSF Secretary General in advance (at least one month prior).

6.3 Nomination

The IBSF Executive Committee nominates the Juries and the Material Controllers. The National Federations have the right to make recommendations.

6.3.1 Olympic Winter Games

- one or two Technical Delegates
- a Jury President
- two Jury Members
- two Jury Assistants, if required
- two or three Material Controllers

6.3.2 Senior World Championships

- One or two Technical Delegates
- a Jury President
- two Jury Members
- two Jury Assistants, if required
- two Material Controllers

6.3.3 Junior World Championships, Continental Championships, World Cup and Intercontinental Cup

- One or two Technical Delegates
- a Jury President
- two Jury Members
- Jury Assistants, if required
- two Material Controllers

6.3.4 Europe Cup and North American Cup

- One or two Technical Delegates
- a Jury President
- one or two Jury members
- one or two Material Controllers

6.3.5 International Competitions

A Jury President or a Technical Delegate who represents the IBSF, with the task of controlling and supervising the event

6.4 Authority

6.4.1 Jury

The Jury is the highest authority of the competition and implements control with the right to make final judgments within the scope of the IBSF International Rules.
The decision of the Jury is final, incontestable and takes effect immediately.
Furthermore, the Jury is responsible for:
Potential changes of the ice temperature

- Any change of sleds
- Any change of runners
- Any repetition of a heat
- Any reduction in the number of training runs
- Any interruption or cessation of the race, after consultation with the Race Director and the Chief of Track
- Any reduction in the number of participants

- Any penalties for rule violations
- The length of the start grooves
- The number of pilot sleds
- The temperature and weight checks
- Decisions regarding protests
- Any suspension of athletes
- Closing the track in case of danger

6.4.2 Technical Delegates

During the Olympic Winter Games one Technical Delegate for Bobsleigh, one Technical Delegate for Skeleton and one additional Technical Delegate are to be appointed. During the Senior World Championships one Technical Delegate for Bobsleigh and one Technical Delegate for Skeleton are to be appointed.

In principle, for all other IBSF events only one Technical Delegate may be appointed for both disciplines.

The power to make decisions regarding the event lies exclusively with the Jury.

If no Technical Delegate has been appointed, the Jury President acts automatically also as Technical Delegate.

6.4.3 Attendance

The Jury President must be available from the first team captains' meeting onward. The Jury is responsible for the compliance with the IBSF International Rules from the start of the official training to the end of the awards ceremony. In cases of absence of a Jury Member, the IBSF appoints a substitute.

6.4.4 Expenses

The IBSF Executive Management Committee determines annually the reimbursement of allowable expenses of the Jury and the Technical Delegate, and informs all concerned by circular letter.

6.4.5 Authority to Inspect

During the training and the race, the Technical Delegate and each Jury Member shall have access without prior notification to all technical equipment and facilities necessary to hold the competition.

6.4.6 Special Decisions

The Jury is also responsible for all decisions pertaining to the competition that are not specified in these Rules.

7. RACE DIRECTOR

7.1 Appointment

The Race Director, appointed by the Organiser, must possess an IBSF International Jury License for all official IBSF competitions.

7.2 Duties

The Race Director is responsible for ensuring that, under the direction of the Jury, all measures are taken that are necessary for the orderly progression of the competition according to the IBSF International Rules. This includes the progression of the team captains' meetings, the training and the race.

Potential necessary changes taken on short notice must first be arranged with the Jury and the Sport Director.

The Race Director decides upon the use of sunshades during rain, snowfall, or sunshine. He shall inform the Jury President immediately about all decisions.

8. GENERAL REGULATIONS

8.1 Sporting Year

The sporting year of the IBSF runs from October 1 to September 30 of the following year.

8.2 Liability

The IBSF assumes no liability for accidents, damages, or other claims that should result from the allocation of the competition or from its proceedings.

8.3 Amateurism Rules

The rules of the IOC are adopted here.

8.4 Licenses

All athletes must be electronically registered by their National Federation for an IBSF International License prior to participating in the sport of bobsleigh. The minimum age for athletes for obtaining an IBSF International License is 15 years of age. However, athletes who will turn 15 years of age during October 1st and March 31st of the current season are eligible to apply for an IBSF International License as well. This applies for men's and women's bobsleigh. However, the minimum age for the Monobob events is 14 years of age. Athletes under the age of 18 require the permission of their parents or legal guardian in order to exercise the sport of bobsleigh. The parents or legal guardian must sign the letter of permission and the signature must be officially certified.
The IBSF Electronic License must be filled out in all details and certified by the President or a duly authorized Officer of the National Federation and submitted with a digital photograph.
By registering for a license, the National Federation verifies and confirms that the athlete:

- has had a medical check and has met the medical requirements for bobsleigh;
- is covered by insurance against accidents deriving from the practice of bobsleigh training or racing;
- is covered by insurance against liability;
- has been issued the IBSF International and Anti–Doping Rules and
- has signed a form in which the athlete declares to comply with the IBSF International and Anti–Doping Rules.
- has signed a copy of the IBSF Athlete Code of Conduct

The license is valid for 12 months (October 1 to September 30).

8.5 Insurance

The Member Federations of the IBSF are responsible for ensuring that each of their athletes is sufficiently covered by accident and disability insurance, as well as public and third party liability insurance for risks that may arise from an accident must be completely covered by the insurance.

8.6 Entries

a) Prior to the deadline specified in the event announcement, the Members shall inform the Organiser of the competition by entering online the teams for the competition.

b) The Members are obligated to inform the IBSF Secretary General of the names of those people who are authorized to submit entries.

c) The entry fees belong to the Organiser and amount to the value of €20 per athlete.

d) Additional team members may be entered during the first TCM. For late entries a fee of € 40, 00 per athlete will be charged.

e) The name of the team captain shall be given to the Jury at the first team captains' meeting.

f) The **team captain** must communicate the names of the team members, who will compete in the race, prior to the draw.

g) If the entry deadline specified in the event announcement is not observed, the entry can be accepted for double the entry fee.

Entries may be withdrawn at any time. Entry fees already paid are not refunded.
Entry fees must be paid at the first team captains' meeting.

8.7 Acceptance of the International Rules

With the submission of the entry, the participants (athletes, team captains, coaches and support staff) accept these Rules as binding.

8.8 Track Records and Start Records

Track records and start records will only be recognized by the IBSF if they have been performed during official international IBSF races. The record may be recognized if the team has been subjected to a weight test and their sled to a technical inspection during the competition. If the record is equaled in a subsequent race heat, it does not count as a record. In the event of a draw in the same race heat, more than one team may be listed as the record holders. The record cannot be recognized until it has been stated that there have been no violations of the IBSF International Rules.

8.9 Doping Controls

Doping is prohibited.
The IBSF Executive Committee can arrange for doping controls at all IBSF competitions and at any time outside of the competitions.
The doping controls are carried out according to the IBSF Anti-Doping Regulations.
The IBSF Executive Committee can authorize international specialized facilities to carry out these controls.
By signing the IBSF International License, the athlete is obliged to accept the IBSF Anti-Doping Regulations and to submit to the controls determined by the IBSF Executive Committee.
By signing the Acknowledgement and Agreement, the athletes, team captains, technicians, coaches and support staff recognize the new IBSF Anti-Doping Regulations.

8.10 Rule Violations

The Jury is responsible for the compliance with the IBSF International Rules from the first Team Captains' Meeting to the end of the awards ceremony.
The Jury determines the penalties for violations against the provisions of the International Rules according to the gravity of the offence:

- A warning
- A fine
- Disqualification from the competition
- Application to the Executive Committee to suspend the pilot as well as the whole team for several races

- Application for withdrawal of the license to the Executive Committee.

The athlete concerned or his National Federation has the right to defend himself before a final decision is made regarding the cancellation of the International License.
The fine is collected by the Jury, which forwards it to the IBSF

8.10.1 Athlete Support Person Rule Violations

An Athlete Support Person (Coach, sled or runner builder, physio or any other person) may be deemed to have broken or contributed to the breaking of IBSF Rules. In this case the Jury determines the penalties for violations against the provisions of the IBSF International Rules according to the gravity of the offence:

• a warning
• a fine
• disqualification from the competition / venue
• application for disqualification from future IBSF competitions to the Executive Committee

8.10.2 Prohibited Association

Prohibited Association: In the event that an Athlete Support Person is disqualified from an IBSF event or events (8.10.1) it is prohibited for an athlete (athletes, team or nation) to associate with this person for the duration of their disqualification. If after receiving a written warning the athlete (athletes, team or nation) continues to associate with the disqualified person the athlete (athletes, team or nation) may be given a

• a fine
• disqualification from the competition
• disqualification from future competitions

In order for this provision to apply, it is necessary that the athlete (athletes, team or nation) has been advised in writing by the IBSF of the Athlete Support Person's disqualifying status and the potential consequence of prohibited association and that the athlete can reasonably avoid the association.

8.10.3 Burden of Proof

The burden shall be on the athlete (athletes, team or nation) to establish that any association with the Athlete Support Personnel described in Article 8.10.1 or 8.10.2 is not in a professional or sport- related capacity.

8.11 Sponsorship and Advertising

The IBSF and its Member Federations can negotiate contracts with commercial firms or organisations.

8.12 Trademarks on Equipment

8.12.1 IBSF Properties

The IBSF property areas for advertising with sponsors or similar entities are governed by the IBSF Advertising Guidelines. The specifications established therein shall be followed. Violations result in penalties.

8.12.2 Freely Available Advertising Areas

With the exception of the areas entitled to the IBSF in accordance with the IBSF Advertising Guidelines, unlimited advertising may be placed on the sled, the equipment and the athlete.

9. MEDICAL SERVICE AT THE TRACK

9.1 Race Doctor

The following must be available at the track during the official training runs and the race heats with the exception of World Cup race days and World Championship race days:

- One medical specialist with knowledge of emergency medical aid
- One ambulance equipped with appropriate resuscitation equipment at all times
- One room exclusively used for first aid treatment – which is marked as such.

World Cup race day and World Championship Race day:

- One medical specialist with knowledge of emergency medical aid
- two ambulance equipped with appropriate resuscitation equipment at all times – in case one ambulance leaves the track a second one has to be called immediately; if two ambulances leave the track the race must be stopped.
- One room exclusively used for first aid treatment – which is marked as such.

Should the race doctor and/or ambulance be medically required, the race or official training must be interrupted until their services are again guaranteed.

The Organiser shall be attentive to this regulation, as the Organiser is responsible for compliance with these requirements.

The IBSF Medical Committee decides on any possible exceptions to the above. The Jury President must be informed of these exceptions prior to the start of the official training.

Tasks of the Race Doctor:

- He is responsible for the first medical aid for injuries and illnesses of the athlete
- He directs the transportation of injured or ill athletes for further medical treatment
- After every crash, the athlete must come to the Race Doctor for an examination in order to obtain the authorization to participate further in the training or in the race.
- If the Race Doctor suspects a concussion, he is entitled to prohibit the concerned athlete from further participation. In these cases, the Race Doctor must immediately inform the Jury President of the athlete's inability to continue to participate in the competition, and the athlete is accordingly officially removed from the competition.
- The Race Doctor must inform the Jury President immediately who will inform the IBSF office to temporarily unlicense the concerned athlete.
- The Race Doctor must complete an Injury Registration Document after every examination of an injured athlete.
- At the end of the competition, all of these documents (including timesheets) must immediately be forwarded to the IBSF office and Chairman of the IBSF Medical Committee.

9.2 Team Doctor

Race doctor and team doctors should cooperate on evaluation and treatment.

9.3 Evacuation of injured athletes

The event Organisers must guarantee that injured athletes can be transported away from any point of the entire length of the track.

10. THE COMPETITION

10.1 Official Training

Participation in the official training is only permitted for registered athletes for the competition.
During a competition (the official training and the race), pilots are not permitted to make runs on the track outside of the official program schedule, nor are they permitted to conduct training or races on other tracks at the same time or compete on more than one circuit. Replacement pilots who start participating in the official training at a later stage, may have made training runs on other tracks.

10.1.1 Olympic Winter Games and Senior World Championships

Directly prior to the race, 6 official training runs in each of 2-man bobsleigh and 4-man bobsleigh shall be offered.

10.1.2 Continental Championships, World Cup and Intercontinental Cup

Directly prior to the race, 3 days of official training with a total of 6 official training runs (2-man bobsleigh and 4-man bobsleigh combined) shall be offered. Each pilot may freely choose the program by which he makes his training runs. However, he may only take a maximum of 4 training runs in any discipline. For women 6 official training runs shall be offered. For men and women a minimum of two valid training runs per discipline without accidents must be completed in order to be allowed to participate in the race. A Nation may sign up different pilots for the two-man and four-man bobsleigh competitions. In this case the nation will be assigned one additional training run for each additional pilot (pilot in addition to the quota) up to a maximum of 4 runs per pilot/discipline. The nation may assign the available runs to the various pilots according to its own choice. Only one additional pilot per training day is admitted.
In the case the number of training runs/days is reduced, a pilot who participates in one discipline only may make the same maximum number of runs per discipline as a pilot who participates in combined disciplines.

The pilots who participate in combined races, i.e. two-man and four-man races, and have not made any training and race runs previously on the respective track, may make two additional training runs during the World Cup events up to a maximum of four runs per discipline. These runs are to be announced during the first team captains' meeting and will be granted by the Jury after consultation with the team captain and the race organizer. No additional training day will be offered. The additional runs must be completed during the normally scheduled training days.

10.1.3 Junior World Championships, Europe Cup and North American Cup

These competitions can be done according to the World Cup program: training runs can be done during the week whereas competition runs will be held on the weekend.
Teams performing in both disciplines have a right of a maximum of 10 training heats. The teams can choose on which day they want to do 2-men or 4-men training.
Teams just performing in one discipline have a right – if possible – of 2 training runs each on all training days.
To be admitted to the race teams need to have at least two training runs without any accident and according to the IBSF rules.
If there are double-races training and competition runs can be separated as before. That means there will be training runs in 2-men first, than 2-men competition, followed by 4-men training runs and 4-men competition.

10.1.4 International Competitions

The Organiser determines the number of official training runs. A minimum of 3 official training runs must be offered.

The IBSF Executive Committee can modify the number of official training days and / or training runs in official IBSF competitions. However, the change in the number of official training days and / or training runs must be declared in the event announcement.
At all official IBSF competitions, each pilot must complete two training runs without accident to be allowed to participate in the race.

10.2 Starting Order During Training

The starting order of the participating nations shall be drawn at the first team captains' meeting. If possible, the training is run according to "nation groups".
The following starting order applies for events in which the official training takes place for 2 or 3 days:

1st day:	From nation 1 to the end
2nd day:	From the end to nation 1
3rd day:	by individual according to the 2-man bob IBSF ranking (based on best-placed pilots present/starting, women and men separately)

During the World Championships and the Olympic Games the starting order for two-man and four-man bob will be defined on the basis of the IBSF ranking of each of these two disciplines.

10.3 Track Conditions During Training

If possible, the final day of official training should take place at the same time as the race and the track preparation should correspond to the conditions of the race. No alterations to the track profile should be made after the final training session.

10.4 Start Grooves

The start grooves are determined by the Jury on the first day of training and can only be modified upon their command. Both grooves shall be prepared appropriately for skeleton runners (17 mm diameter).

10.5 Replacement of Athletes

It is possible to replace an athlete with another athlete from the same National Federation at any time during training. However, a pilot may only be replaced if the replacement pilot is still able to achieve the minimum number of accident-free training runs without a change in the program schedule.
A pilot who carries out runs beyond the official training (for example, as a forerunner or in the "guests" class) cannot take part in the competition later on. The jury can make an "exception" to allow such pilot's participation in the "Team Competition"; however, this exception must be declared during the first meeting with the team captains.

Double Competition
During double competitions on the same track, the National Federations can sign up different pilots for the second competition from those participating in the first competition.
The new pilots will be given the same number of training runs as the other teams. This applies only for World Cup and North American Cup, whereas in Europe Cup only one new pilot may use the same number of training runs. All pilots have to be already registered for the 2 races at the first Team Captain´s Meeting (TCM).
The replacement athlete must hold a valid IBSF International License.

10.6 The Race

10.6.1 Race Heats

An IBSF race can be held over 2 or 4 heats.

a) 4-Heat Races

In principle, the Olympic Winter Games and the Senior World Championships are held over 4 race heats. A reduction in the number of heats is possible in cases of force majeure. A minimum of two runs shall be required to award the title.

b) 2-Heat Races

The Continental Championships, the Junior World Championships and all other official IBSF races are held over 2 heats. All teams entered in the draw must conduct at least one race heat for the race to be officially valid.

10.6.2 Starting Order

Starting order for 2-heat races:

1st race heat: From 1 to the end

2nd race heat: From 20 to 1, according to the ranking of the first race heat

Starting order for 4-heat races:

1st race heat: From 1 to the end

2nd race heat: From 20 to 1 and from 21 to the end, according to the ranking of the first race heat

3rd race heat: From 1 to the end, according to the ranking after two race heats

4th race heat: From 20 to 1, according to the ranking after three race heats

10.6.3 Starting Order System

To hold a race, a minimum of 6 teams from a minimum of 2 nations must participate.

- Olympic Winter Games, Senior World Championships and Junior World Championships
  The pilots will choose their start numbers according to their IBSF ranking.
  The leading pilot in the IBSF ranking list by discipline will have the first choice, the second ranking the second choice and so on.
  At the end of the distribution procedure – in the case of an external distribution of the starting numbers - the Jury will assign a starting number among those left to those athletes who were absent during the official distribution of the starting numbers
  In the case of an internal distribution of the starting numbers (Team Captain Meeting) the starting number may also be chosen by the team captain.
- Continental Championships, World Cup, Intercontinental Cup, Europe Cup and North American Cup.
  The season starts on the basis of the IBSF Discipline Ranking List from the previous season. The 10 best-placed pilots in the current IBSF Ranking List who are present are drawn. All other pilots start according to the ranking in the current IBSF Ranking List.
  Teams without points are drawn at the end of the field.
  The Jury holds the draw in public. An electronic draw by computer is possible. The pilots keep their start numbers for the duration of the competition.

10.6.4 Start Number

The Organiser supplies the teams with the start numbers. The size of the number should be approximately 40 cm2.

The start numbers must be affixed according to the instructions of the Jury on the left side next to the pilot's push bar. They cannot be modified.

10.6.5 Teams and Manner of Driving

All race heats must be run with the same team.

In cases of injury or illness and with the permission of the Jury, an athlete may be replaced with an athlete from the same National Federation, with the exception of the pilot. The request for replacement shall be made in writing by the team captain. A medical certificate from the team doctor or the Race Doctor shall be enclosed or shall be given subsequently as soon as possible, as the case may be.

The Race Doctor and the Jury are authorized to prohibit athletes in inadequate mental or physical condition from competing. Only driving from the sitting position is allowed.

After a crash, the entire team must cross the finish line together with the sled. If the sled should come to a stop before the finish line, the team is disqualified. The help from third party is not permitted.

10.6.6 Track Conditions During the Race

The track is prepared after agreement among the Jury, the Race Director and the Chief of Track.

In case of snowfall, it shall be made certain that a regularly scheduled race is possible. Particular attention shall be paid to the ice surface at the start up to the start time measurement (50 m), which shall be swept prior to the start of each sled.In particular, the start grooves are to be swept. The track must be swept regularly. The race director must prepare a written protocol for sweeping in consultation with the Jury. The written protocol has to be announced no later than the final Team Captains Meeting

10.6.7 Track Walks

The times for the track walks are determined after agreement between the Race Director and the Jury, and are disclosed at the first team captains' meeting. Track walks are not allowed outside of these times. Entering the track during a run is absolutely prohibited.

There are no track walks on race days.

10.6.8 Start

The start block may be stepped upon during the start procedure, but the rear edge may not be crossed.

The start line (the first timing point) must be clearly visible.

The entire team shall be present after the call to the start.

The starter clears the track by means of acoustic and optical signals. The team at the start must activate the timing device within 60 seconds.

The athletes can accelerate the sled by pushing it.

The help from the third party during the start procedure is prohibited.

10.6.9 Reduction

If the number of registered teams exceeds the capacity of the track, the Jury, in agreement with the Technical Delegate and with the Race Director, can reduce the number of participants.

All registered teams must be allowed to compete in the first heat.

The number of teams can be reduced before each subsequent race heat.

The starting order does not change in such a case.

10.6.10 Interruption or Cessation

The Jury, in consultation with the Technical Delegate, the Race Director and the Chief of Track, can interrupt or stop the race for the following reasons, among others:

- Damage to the track
- Weather conditions
- Failure of the timing system or other technical equipment

After an interruption, the team at the start shall be granted a suitable amount of preparation time.

10.6.11 Repetition of a Heat

After a malfunction not caused by the team, the heat may be repeated with the authorization of the Jury.

The run may be repeated as soon as the team is ready to start.

10.6.12 Replacement Races

If a race is cancelled, the IBSF Executive Committee can decide to hold a replacement race at a later date on the same or a different track.

The following teams may participate in the replacement race:

- All teams eligible to participate, if the race concerned was cancelled prior to issuing the start numbers, or
- Only those teams which have received a start number for the cancelled race. Another drawing of the start numbers is carried out.

10.6.13 Pilot Sleds

The Jury determines the number of pilot sleds. The Organiser is obliged to provide a minimum of three pilot sleds. Before 2-man bobsleigh races, only 2-man bobsleighs should be used. Before 4-man bobsleigh races, only 4-man bobsleighs should be used.

If the Jury decides there are an insufficient number of pilot sleds available, the Jury can appoint teams that are last in the starting order. These teams start immediately after the pilot sleds, and their pilot run is also scored as a race heat.

The race Organiser is fully responsible for the selection and composition of each pilot sled.

10.6.14 Time Measurement

The run time can be measured electrically or electronically. Two independently functioning timing systems must be in use. The times must be measured to 1/100th of a second.

Times equal to 1/100th of a second are given the same rank.

There must be five interval times shown.

The first interval time corresponds to the start time (50 m).

The next four interval times must be evenly distributed among the remainder of the track.

The Organiser shall print out all official times recorded during the training and the race and shall hand them out to the participating nations.

If two or more teams achieve the same time in the first, second or third heats, the starting order for these teams in the second, third and fourth heats respectively shall be determined according to the start number. In such a case, the team with the highest start number is the first to start.

If the number of participants is reduced prior to the final race heat, the eliminated teams remain in the results with their final ranking. If in the final heat a team crashes, does not start or is disqualified, they do not receive a final ranking. The remaining teams move up in the ranking list. The time measurements shall be handed over to the TD/Coordinator at the end of the competition.

10.7 Parc Fermé

A Parc Fermè should be implemented and adapted to the specific conditions of the respective track.

10.8 Material and Equipment

10.8.1 Sled

In principle, all race heats must be contested with the same sled. If the sled has been damaged beyond immediate repair, a replacement sled may be allowed with the authorization of the Jury.

10.8.2 Runners

In all official IBSF races listed on the IBSF-Calendar (OWG, World Championships, Junior World Championships, Continental Championships, WC, ICC, EC, AC, IR) only IBSF standard runners (standard material) are admitted. The authenticity of the runner steel may be controlled by the IBSF Jury and/or IBSF Materials Inspectors at any time. To define the authenticity of the runner steel, inspections may include the analysis of the composition of the runner material and examination of the hardness of the runner steel.

Only geometrical changes to standard IBSF runners through the removal of the original material are allowed. No materials may be added in any way.
The use of any means of propulsion is prohibited.
Changing runners between race heats held on the same day is only permitted after damage and with the authorization of the Jury.
At the Jury's discretion, runners can be subjected at any moment to inspection with special equipment. In case of inconclusive findings, runners may be seized and sent to a specialized laboratory for further testing.

10.9 Technical Inspections

The sleds participating in the race must be in the start area, positioned in the spaces assigned to them.
All preparatory work performed on the sleds, including mounting the runners, must be completed 45 minutes before the start of the race.
The sleds must be turned upside down and uncovered so that the runners face upwards.
After this time point, no work may be performed on either the sleds or the runners. Changing runners and replacing sled parts is also prohibited.
The runners may be polished between the race heats. Only the athletes belonging to the team from the sled concerned may perform the work.
After the last sled has been brought back to the start, there must be a break of a minimum of 5 minutes before the next race heat begins.
The runners can only be polished using abrasives provided by the IBSF
The runners must remain mounted on the sled. The use of any other materials and / or products is prohibited. Violation of this rule is penalized with immediate disqualification from the race.
The Jury can at any time confiscate the abrasives provided by the IBSF, regardless of whether they have been used or not.
Only the Jury, in agreement with the IBSF Materials Committee, can give authorization for repair work to be performed on sleds with technical problems.
Between the individual race heats, no further work may be performed without the authorization of the Jury.
If a set of runners is so damaged during a race that immediate repair is not possible, the team has the possibility to use a new set of runners, after receiving the authorization of the Jury. The new set of runners is subject to the provisions of the IBSF International Rules.
All sleds and runners participating in the race can be subjected to technical inspections. The Jury decides which sleds and runners are to be inspected and when the inspection is to take place. Inspections of the other equipment can also be conducted. The Jury can assign the members of the IBSF Materials Committee to carry out these inspections.
In cases of suspicion, components of the sled can be confiscated and subjected to technical inspections. The inspections can be conducted at a mobile laboratory on the competition site. In this case, the Jury evaluates the laboratory results immediately and takes the appropriate action.
If the technical inspections are conducted after the race at a laboratory outside of the competition site, the inspection results are forwarded to the IBSF Executive Management Committee. The laboratory in question must be approved by the IBSF. The procedures used must be in accordance with the Appendix attached to these Rules.
In case the results show proof of a violation against the IBSF International Rules, the IBSF Executive Committee takes the appropriate action. In this case, the National Federation concerned shall bear the costs of the inspection and appraisal. The decisions of the Executive Committee are incontestable.
If it is determined that the IBSF International Rules have been violated, then it automatically results in disqualification from the competition concerned.

10.10 Runner Radius

The Jury or the IBSF Materials Committee checks the radius of the runners with official IBSF gauges. The radius of the runners may not be less than that of the gauge.

10.11 Measurement of Runner Temperatures

The runner temperatures are checked before the start according to the instructions of the Jury. All four runners are checked with an electronic measuring device equipped with a temperature measuring sensor and a display device for temperatures between at least +30° C and -20° C.
The Organiser must provide two electronic measuring devices, one for the Jury and one for the teams participating in the race.
The temperature of the runners is measured on the side of the runner in the area of the middle supporting bracket. The measuring sensor shall remain in contact with the runner until the display on the temperature measuring device is stable.
The temperature of the runners that are mounted on the sled being used in the race may exceed the temperature of the reference runner by a maximum of 4° C. If the temperature of the reference runner is less than -14° C, the runners on the sled may have a maximum temperature of -10° C. If a team's runner temperature exceeds the limit, another measurement of the temperature of the reference runner and of the runner on the sled shall be made immediately following the first measurement. If the second measurement also shows a temperature that exceeds the limit, it leads to immediate disqualification. This is then registered in the Temperature Measurement Protocol.
The temperature listed on the official display will not be updated. The update will be done every 15 minutes (Art. 10.12).
The sled must be moved from its assigned place in the start area to the runner temperature measurement station by carrying it or by pushing it on its side on the bumpers. Cooling down the runners by touching them with snow or ice is not allowed.

10.12 Reference Runner

The temperature of the reference runner is measured according to the following procedure.

a) The reference runner must be hung or otherwise positioned in the open air one hour before the start of the race, in the same climactic weather conditions as the sleds included in the race. When the reference runner is positioned in the open air, it must show a temperature of between +18° C and +22° C.
b) The exact temperature of the reference runner at the time it was positioned in the open air must be written on a clearly visible board in the start area. The board must also show the air and ice temperatures.
c) The temperature of the reference runner is measured on the side of the runner in the area of the middle supporting bracket.
d) The temperatures shown on the temperature display board are updated as follows:

- The first time, 60 minutes before the start of the race;
- 10 minutes before the start of the race and before the start of the second heat
- Afterwards, every 15 minutes
- In the case of extraordinary climactic conditions (high temperatures), after measuring the runner temperatures the Jury can instruct the teams to place their sleds on the snow or ice immediately before the start.

10.13 Runner Cleaning

The runners are treated and cleaned before the start of the race heats with special cleaning solutions provided by the IBSF.
In every race in which the IBSF standard material is required, all runners are sanded with sandpaper in the same manner. It must be obvious that a characteristic amount of material has been removed. If

this is not the case, the procedure is repeated until sufficient material will have been removed; upon request of the Jury sandpaper with a bigger grain size may be used.
The sandpaper grade is determined by the IBSF before the start of the season.
On certain tracks and with certain motives the Jury may decide on a different grade of the sandpaper.

10.14 Weight

The weight is checked using a scale.
Weights can be checked at any time upon decision of the Jury.
The sled and the crew shall be weighed immediately after the conclusion of the race heat, upon request of the Jury. No modifications to the sled or the other equipment may be made. The team shall be inside the sled during the weighing procedure. The first weight test is then made. Each team may request a second weight test, if necessary. For the second test, they have a maximum of 5 minutes to remove snow and ice from the sled. This occurs under the supervision of the Jury.
The observed weight must be registered in the Weight Protocol.
Assistance by a third party is not allowed.
If an athlete needs to be replaced in between heats the team may reduce the ballast weight. Ballast weight may not be added.

Minimum Weight:
Sled including the runners and without the crew:

2-man bobsleigh:	170 Kg
Women's bobsleigh	165 Kg
4-man bobsleigh:	210 Kg

Maximum Weight:
Sled including the crew, the runners and the other equipment:

Men's 2-man bobsleigh:	390 Kg
4-man bobsleigh (Men and/or Women):	630 Kg
Women's bobsleigh:	325 Kg

The maximum allowable weight can be reached by attaching ballast weights. The ballast weights must be firmly bolted or clamped to the sled.

10.15 Electronic Measuring Devices and Equipment

In the time during which the track is subject to the control of the IBSF (official training and races), ~~no~~ electronic or electrical measuring devices or equipment legalized by the IBSF may be used on the sled, on the team or on the track.
TV cameras belonging to the official producer are not subject to this article.
In cases of exception, the IBSF or the Jury concerned can allow specific measurements. In these cases, all the participants must be made aware of the results of the measurements.

10.16 Other Equipment

10.16.1 Helmet

During training runs and race runs, all athletes must wear a full-face helmet that conforms to ECE, OKM or DOT safety standards, and is commercially available in specialty shops. No aerodynamic elements may be additionally attached to the helmet.
It is the duty and the responsibility of the National Federations to comply with the safety standards.

10.16.2 Shoes

The use of spikes on the shoes of the athletes is allowed for pushing the sled, as long as the spikes are arranged in brush form.
The maximum diameter of the spikes may not be greater than 1.5 mm, the spikes may not be longer than 5 mm and the minimum amount of spikes per shoe must not be less than 250.

10.16.3 Clothing

Training and race suits with short pants and short sleeves are not allowed.
No aerodynamic elements whatsoever may be attached either outside or under the race suit.
Race suits must be manufactured from an uncoated textile.

10.17 Awards

10.17.1 IBSF Championships

At official IBSF Championships, the IBSF awards gold, silver and bronze medals to the athletes of the first, second and third placed teams. The athletes of the fourth, fifth and sixth placed teams receive commemorative medals. The Organiser awards additional honorary prizes to the teams.

10.17.2 Official IBSF Competitions

The Organiser awards honorary prizes to the athletes of the first though sixth placed teams.

10.18 Awards Ceremony

The awards ceremony should take place as soon as possible after the deadline for submitting protests.
The doping controls and technical inspections may also take place after the awards ceremony.
At all IBSF Championships and official IBSF competitions, the national flags of the first three placed teams must be hoisted. The national anthem of the winning team must also be played.

10.19 Protests

Protests must be made verbally to the Jury immediately or at the utmost 5 minutes after the heat in which that incident happened. Additionally, the grounds for the protest must be submitted in writing to the Jury no more than 20 minutes after the conclusion of the race.
If no verbal declaration of protest is made, no written protest may be subsequently submitted. Only the team captain may submit verbal and written protests. Collective protests are not allowed.
No protests are accepted after the submission deadline passes.
A fee in the value of €100 shall be paid with the submission of the written protest. If the protest is rejected, the fee is forfeited in favor of the IBSF. Otherwise, the protest fee is returned.
The decision regarding a protest submitted during a race shall be made in a timely manner to allow the team affected by the protest to potentially continue to participate in the race.
In cases of protests submitted after the conclusion of the race, the Jury will announce its decision no more than one hour after the submission of the protest, if possible.
The decision of the Jury is determined by a simple majority of votes. If the votes are equal, the Jury President casts the deciding vote. Jury Assistants do not have the right to vote.
The decision of the Jury is final, incontestable and takes effect immediately.

11. RANKING LISTS

11.1 Ranking List of the Race Series

For the World Cup, Intercontinental Cup, North American Cup and Europe Cup races, there are overall ranking lists issued at the end of the season and the first, second and third placed teams of each series

receive awards. In men's bobsleigh; the first 3 pilots in the Combined IBSF Ranking List ranking of each respective series also receive awards.

11.2 IBSF Ranking List

During the current season, the best results of each pilot are totalled by name for the IBSF Ranking List, regardless of the race series or World Championships in which the results were scored. It is consulted as an adjusted ranking list to determine the various quotas. The "juniors" are highlighted. For men's bobsleigh, there is an IBSF Ranking List for the 2-man competition, another for the 4-man competition, and a Combined IBSF Ranking List. For the "women" there is only the Ranking List for the two-man bobsleigh competition.
The number of races scored is equal to the number of World Cup races carried out up to that specific date during the current season.
The IBSF Ranking List is updated weekly, at the latest on Tuesday of each week. The World Cup ranking is updated immediately after each race.
The IBSF Discipline Ranking List (2-man bobsleigh and 4-man bobsleigh) serves to determine the starting order for the World Cup, Intercontinental Cup, North American Cup and Europe Cup races of the current season as well as for the first competition for each Series of the following competition season. If the ICC, NAC and or EC start before the WC the current ranking list of the corresponding series will be used to determine the starting order (updated once weekly from the second week on, at the latest on Tuesday of each week).
The IBSF Discipline Ranking List serves to determine the nation quotas and the starting order for the Olympic Winter Games and the World Championships.
The Combined IBSF Ranking List is meant to determine the Quota per Nation for the World Cup and the InterContinental Cup of the following competition season.

During the Senior World Championships the World Cup Points Table is applied, for the Junior World Championships the new ICC Points Table according to Appendix "A" is adopted.

The top-ranked teams of a nation determine the nation quotas for the World Cup competitions, and the next-ranked teams determine the quotas for the Intercontinental Cup competitions.

If a pilot sits out for a season, he is scored with 50% of his points achieved on the IBSF Ranking List for the first race of the following season.
In cases of equal points, the following decision criteria apply for all Ranking Lists:

a) First, the highest single point score;
b) Next, in the event of a draw, the better scores at the race immediately previous. (World Cup points are of higher priority than points obtained in the other race series)

12. FINAL CLAUSES

12.1 Coming into Force

This edition comes into force on October 1, 2015.

12.2 Modifications

The IBSF Executive Committee determines modifications to the IBSF International Rules.

12.3 Interpretation

If an article in these Rules should be ambiguously defined so that multiple interpretations are possible, the interpretation should be used that matches the underlying meaning for which the article was written.

13. APPENDIX 1: IBSF RANKING LIST "A"

WC and WCh.		JWCh.		NAC/EC		NAC/EC	
							up to 7
Rank	Points	Rank	Points	Rank	Points	Rank	Points
1	225	1	120	1	120	1	50
2	210	2	110	2	110	2	38
3	200	3	102	3	102	3	28
4	192	4	96	4	96	4	20
5	184	5	92	5	92	5	13
6	176	6	88	6	88	6	8
7	168	7	84	7	84	7	5
8	160	8	80	8	80	8	
9	152	9	76	9	76	9	
10	144	10	72	10	72	10	
11	136	11	68	11	68		
12	128	12	64	12	64		
13	120	13	60	13	60		
14	112	14	56	14	56		
15	104	15	52	15	52		
16	96	16	48	16	48		
17	88	17	44	17	44		
18	80	18	40	18	40		
19	74	19	37	19	37		
20	68	20	34	20	34		
21	62	21	31	21	31		
22	56	22	28	22	28		
23	50	23	25	23	25		
24	45	24	22	24	22		
25	40	25	20	25	20		
26	36	26	18	26	18		
27	32	27	16	27	16		
28	28	28	14	28	14		
29	24	29	12	29	12		
30	20	30	10	30	10		

14. Bobsleigh Constructions

General
The contents of the text are binding; the dimensions indicated in the drawings, diagrams and figures are compulsory.
Both the terms „bobsleigh" and „bob" are used to denote the same system of frame, cowling and runners.

14.1 Principles and Properties

14.1.1 Purpose of the Rules of 14.1

The purpose of the rules of chapter 14 is to promote the safety of the athletes participating in training and competition and of those present at IBSF events and to uphold a fair and honest competition.

14.1.2 Principles

1) Bobs have four runners (one pair of front runners and one pair of rear runners) and are used in competitions that are carried out on iced tracks.
2) To propel the bob, only the pushing force of the team, when starting and the force of gravity are allowed.
3) Two types of bobs are recognized: Two-men bob and Four-men bob.
4) Bobs must be cowled within the guidelines specified by these rules.
5) The rear part of the bobs must be open.
6) From the start (green light signal), no specifications of the bobs may be changed (damages excluded).
7) The driver's and side push bars must be fully retracted. Non-compliance may be punished.
8) It must be possible for the Jury or IBSF Materials Committee to check the specifications of all constructive elements (axles, runner carriers, steering mechanism, articulation mechanism, etc.) without great technical effort.
9) During the course of IBSF events, the Jury may order checks on bobs and sports equipment.
10) The bob manufacturers are responsible for the construction of sleds that can withstand, without damage, the stress of repeated runs on the bob tracks.
11) For building bobs, it is forbidden to use transparent material, or any material that may shatter as a result of an impact.
12) For the purpose of the IBSF, the term "steel" means an alloy of iron and carbon with an iron (Fe) content of more than 50% by weight, or an alloy that reacts positively to the IBSF chemical test.
13) No electronic, electric, electronically activated or wave activated components are allowed on the bob or the crew during official training or competition. The exceptions are those components approved by the IBSF and the relevant Jury.
14) With the exception of liquids or liquid-like fluids used for the purpose of lubricating the bearings and bushings of the frame, no liquids or liquid-like materials may be held in the frame or cowling or may in any way be attached to the frame or the cowling during an official IBSF event.
15) For the purpose of the IBSF, the terms rubber and/or rubber-like material mean a resilient material showing a hardness of less than Shore-D 100 on the ASTM D2240 Durometer test.

14.1.3 Bobsleigh Properties

14.1.3.1Bobsleigh Weights
Minimum weight and maximum weight of the bobs are limited. The following is allowed:

1) Minimum weight (bob including runners, excluding the crew):
   - Two-men bob: 170 Kg
   - Women‘s bob: 165 kg
   - Four-men bob: 210 Kg
2) Maximum weight (including crew members and equipment required):
   - Two-men bob: 390 Kg;
   - Four-men bob (Men and/or Women): 630 Kg;
   - Women’s bob: 325 Kg

14.1.3.2 Bobsleigh Functional Dimensions

The following main dimensions and constructive elements of the bobs are fixed. All dimensions refer to bobs without any load on a flat surface, if not specified to the contrary.

14.1.3.2.1Gauge (centre to centre of opposite runners).

The gauge is the same for the front and rear runners, 670 mm ± 1 mm.

14.1.3.2.2 Axle base

Distance from the centre of the front axle to the centre of the rear axle (referred to the plane of symmetry of the bob): 1690 mm ± 30 mm (two-men bob); 2130 mm ± 30 mm (four-men bob).

14.1.3.3 Bobsleigh Miscellaneous Properties

14.1.3.3.1Bobsleigh Suspension

There must be no rubber, rubber-like or energy absorbing materials in the runner carriers, frame and / or all other parts of the bob, apart from those specifically allowed by the IBSF rules.

14.1.3.3.2 Bobsleigh Brakes

All bobs must be equipped with a functioning braking system (Figure 20).

14.1.3.3.3 Ballast

1) Weight limit may be achieved by means of ballast. If for this purpose, ballast is used that is not firmly welded, bolted or clamped to the frame by steel fasteners, it must be contained in a steel hollow profile. The size of any closed steel profile serving as a container for ballast weight is limited to a cross section of 50 x 50 mm and a length of maximally 400 mm. The use of tape or plastic straps for the purpose of attaching ballast to the frame or cowling is prohibited.
2) No liquids or liquid-like materials may be used as ballast materials.

14.2 Bobsleigh Construction and Functioning

14.2.1 Purpose of Rules of 14.2

The purpose of the Rules governing the construction and functioning of the equipment used is to promote that the equipment used in IBSF events is able to withstand the stresses of training and competition and that the equipment used provides adequate protection for those using the equipment. Furthermore, the paragraph 14.2 aims to promote a fair and honest competition. Finally 14.2 is directed at controlling the cost of competing in IBSF events.

14.2.2 General Structure and Functioning

14.2.2.1 Articulation

14.2.2.1.1 Transversal Division

Every bob frame must be divided transversally between front axle and rear axle.

14.2.2.1.2 Pivotal Connection

1) The front portion and the rear portion of the bob are pivotally connected, the longitudinal pivot axis (2) being essentially parallel to the horizontal standing surface (1).
2) The angle between said longitudinal pivot axis (2) and the horizontal standing surface is must not exceed 5°.

14.2.2.1.3 Longitudinal Pivot Axis

1) The longitudinal pivot axis (2) is embodied by a longitudinal pivot bolt (3) of steel, having a middle circular cross-section with a minimum diameter of 30 mm (two-men bob) and 35 mm (four-men bob) that may taper to the ends to a minimum diameter of 21 mm (two-men bob) and 31 mm (four-men bob).
2) By means of said bolt (3), both bob portions are pivotally connected.
3) The pivot bolt (3) may have means of rotational elastic stabilization. For this purpose, rubber or rubber-like material may be used. These stabilizing elements must not contribute to any vertical movement. No hydraulic or pneumatic damping system is allowed.
4) If the pivot bolt (3) ahead or behind the division is enclosed by a box, each box must have a 20 mm diameter inspection hole accessible from the top.
5) At the dividing line, the longitudinal centerline of the longitudinal pivot axis (2) must be arranged at least 80 mm (two~ and four-men bobs, without crew and supported on runner carriers) above the standing surface.
6) The dividing line must be at a distance of 520 mm ± 50 mm (two~ and four-men bobs) behind the centre of the front axle

14.2.2.1.4 Cowling division

The cowling must also be divided transversally. Rubber or rubber-like material may be used to cover the gap between the front and the rear parts of the cowling.

14.2.3 Frame and Running Gear

14.2.3.1 Purpose of the Rules of 14.2.3

The purpose of paragraph 14.2.3 is to control the sturdiness of the frame in the interest of safety and, in the interest of competition to control the amount of suspension provided to bobsleigh.

14.2.3.2 General Stipulations Frame

1) All joints in the frame must be rigid.
2) The front (4) and rear (31) frame must not be adjustable in stiffness during heats or between heats.

14.2.3.3 Front Portion of the Frame

1) The front portion of the bob must be constructed with a continuous (welded) supporting frame (4) made of steel and extending from the longitudinal bolt (3) at the transversal division line to the bearing housing of the steering bolt (5). All load bearing frame members and the bearing housing(s) of the steering bolt (5) and the bearing housing(s) of the longitudinal bolt (3) bolt must be welded to the frame.
2) The swivel angle of the front axle (9) (two~ and four-men bobs) in the vertical plane (referred to the standing surface) is limited to maximally ± 12°
3) The distance from the centre of the front axle (9) to the front tip of the bob is limited to: minimally - 600 mm (two~ and four-men bobs) and maximally - 750 mm (two~ and four-men bobs)
4) If the frame members and connecting profiles are made of tubing, they must remain hollow with no filling and have an inspection hole with a minimum diameter of 8 mm.

14.2.3.3.1 Steering mechanism

1) A rotating steel steering bolt (5) is fitted to the front frame (4) and rotates by means of a steering mechanism. The said steering bolt must not exceed 5° from vertical.
2) The bearing housing of the steering bolt must be completely welded to the frame, on all sides.
3) The lower end of the steering bolt is completely welded perpendicular to a steel steering plate (6) with a minimum thickness of 7.5 mm throughout the surface of the plate and a minimum width of 69 mm over half its length (two~ and four-men bobs). A central welding access hole is allowed.
4) On this steering plate (6), at a bolt (7) lying in front of the axle (9) and at a bolt (8) lying behind the axle (9), steel flanges (11a and 11b) are pivoted on a pivot axis (10) that is perpendicular to the front axle (9) and perpendicular to the steering bolt (5).
5) The minimum diameter of the bolts (7 and 8) must be 20 mm.

6) There must be no vertical motion between the fixed bearing and the rotating support.
7) A continuous, one-piece steel bottom plate (14) is mounted below the axle (9) with a minimum thickness of 7.5 mm (two~ and four-men bobs) throughout the surface of the plate and a minimum width of 69 mm (two~ and four-men bobs). On each end of the plate for a length of 20 mm a chamfer or rounding is allowed.
8) The bottom plate (14) is firmly bolted (15), with no free play, to both steel flanges (11a, 11b).
9) An intermediate layer (20) of rubber or rubber-like material, a maximum of 3 mm thick, may be placed between the respective flanges (11a, 11b) and the bottom plate.
   a) The thickness of the rubber or rubber-like material is to be measured after having been removed from the sled.
   b) For any further compensation, only steel and / or aluminum shims may be used.
10) The free length of the bottom plate (14) between the two flanges (11a and 11b) in the longitudinal direction of the bob is 220 mm ± 40 mm (two~ and four-men bobs).
11) The flanges (11a and 11b) can be provided with U-shaped guiding elements.
12) For the purpose of returning the runners in a neutral position, rubber or rubber-like materials may be used in the steering mechanism.

14.2.3.3.2 Front Axle

1) The front axle (9) consists of a continuous, straight, circular steel tube manufactured from a single piece of steel having an outer diameter that is a minimum of 44 mm (two~ and four-men bobs), which reduces to a minimum of 32 mm (two~ and four-men bobs) to fit the bearing of the front runner carrier (17).
2) The 44 mm diameter portion of the axle must have a minimum wall thickness of 9 mm and a minimal length of 450 mm.
3) In its middle portion, the front axle (9) has a steel fastening plate (18) of no less than 7.5 mm in thickness that must be strongly welded (not screwed) to it and firmly bolted to the bottom plate (14).
4) Steel spacers are allowed between the axle fastening plate and the bottom plate.
5) The fastening plate (18) may be recessed flush to the circumference of the front axle (9).
6) A steel plug may be welded or pressed into each end of the axle (9) to provide attachment for the runner carrier retainer.
7) If a steel plug is used in the end of the axle, it must have a 6.5 mm through-hole.
8) The front axle (9) must not be clad, cased or streamlined.

14.2.3.3.3 Front Axle Leaf Spring

1) Between the steering plate (6) and the front axle (9) there is a continuous steel leaf spring (19) with a minimum thickness throughout of 6 mm.
2) The points at which the leaf spring (19) rests on the front axle (9) must be symmetrically at least 330 mm from each other (two~ and four-men bobs).
   a) The leaf spring can be made of three pieces.
   b) The brackets must have an axial width of min. 12 mm. The brackets must be screwed with a minimum number of two M8 screws.
   c) The radius of the brackets will not be limited.
   d) No additional spacers are allowed.
   e) Brackets must be made of steel.
13) When the axle is in a neutral position, there must be no free play between the leaf spring (19) and the steering plate (6) or between the leaf spring (19) and the axle (9).
14) No spacers are allowed between the leaf spring (19) and the steering plate (6) or between the leaf spring (19) and the axle (9).

14.2.3.3.4 Front Runner Carriers

1) Each front-runner carrier consists of a straight steel spring leaf (17) with a thickness of no less than 7.5 mm throughout (two~ and four-men bobs).

2) The distance from the standing surface of the front runner carriers to the axle centre is limited to maximally 100 mm.
3) A bearing housing (16) for the front axle (9) must be welded to the upper side of the spring leaf (17).
4) On the lower part of the spring leaf (17) there will be a guiding bracket (21) welded in the centre.
5) On either end of the spring leaf (17) there will be holding brackets (22 and 23) welded in position.
6) The bearing housing (16) has a minimum outside diameter of 50 mm (two~ and four-men bobs) and a maximum outside diameter of 55 mm (two~ and four-men bobs).
7) The length of the bearing housing (16) is no less than 94 mm (two~ and four-men bobs).
8) The hole in the bearing housing (16) must be concentric with respect to a horizontal diameter.
9) The distance from the outer end of the bearing housing (16) to the straight outer edge of the front-runner carrier (17) must not exceed 6 mm.
10) As seen in the top view, the outer side of the front-runner carrier (17) must be straight and perpendicular to the axle (9); the outer side of the spring leaf and guiding bracket must essentially fall above one another. (No offset is allowed.)
11) The length of the front-runner carrier (17) is 655 mm ± 3 mm (two-men bob), 735 mm ± 3 mm (four-men bob).
12) The width of the front-runner carrier (17) must be no less than 35 mm (two~ and four-men bobs) at the front and rear ends and must increase towards the centre to its maximum width, which must be no less than 69 mm (two-men bob) and no less than 89 mm (four-men bob).
13) In a top view, the inside edge of the front-runner carrier (17) facing the cowling must not be concave.
14) The front and rear holding brackets (22 and 23) have a U-shaped cross section, where the “bridge” of the U is welded to the runner carrier (17) and has a minimum thickness of 7.5 mm.
15) The two U legs extend vertically downward with a height of 50 mm ± 2 mm. The outside dimensions of the U legs are 30 mm ± 2 mm.
16) The length of the holding brackets (22 and 23) is 70 mm ± 2 mm.
17) The holding brackets (22 and 23) must be provided with runner mounting holes, the centre of which must be 31 mm ± 1 mm from the lower side of the runner carrier (17). The runner mounting holes must be symmetrical within 1 mm to the front and rear of the holding brackets (22 and 23).
18) Only the holes (24 and 25) for the head of the bolts may be countersunk.
19) The hole centers of the front and rear holding brackets (22 and 23) have a centre distance of 585 mm ± 2 mm (two-men bob) and 665 mm ± 2 mm (four-men bob).
20) The middle guiding bracket (21) has the same dimensions as the holding brackets (22 and 23), with the exception that the U legs are connected by welded metal straps, front and rear, to hold a layer of rubber or rubber-like material at the bottom of the U (26).
21) The middle guiding bracket (21) may be additionally supported to the spring leaf.
22) The centre of the bearing housing (16) may be a maximum of 5 mm out of symmetry between the runner mounting holes (two~ and four-men bobs).
23) The runner carriers (17) must have a means of rotational elastic stabilization.
24) If the rotational stabilization is mounted from the bottom of the runner carrier, the opening in the spring leaf may not exceed a length of 35 mm and must be within the welds of the bushing to the spring leaf.
25) The front-runner carriers (17) must not be cased, clad, faired or streamlined.
26) All edges of the spring leaf, guiding brackets (21) and holding brackets (22 and 23) may be radiused or chamfered to a maximum of 8 mm.

14.2.3.4 Rear Portion of the Frame

1) The rear bob portion must be constructed with a continuous (welded) supporting frame (31), made of steel and extending from the longitudinal pivot bolt (3) at the transversal division line to the

fastening means for the rear axle. All load bearing frame members and the bearing housing(s) of the longitudinal bolt (3) must be welded to the frame.

2) From the division line to the rear axle, the longitudinal frame members must be made of closed steel profile. The longitudinal frame members must have a minimum section area of 703 mm2; the largest dimension of the said frame member must be at least 37 mm. The smallest dimension of the said frame member must be at least 19 mm.
3) If the longitudinal members are made of tubing, they must remain open with no filling and have inspection holes with a minimum diameter of 8 mm located every 500 mm along the frame.
4) The minimum distance between the two longitudinal members of the rear frame will be 320 mm.
5) Where the axle is fastened to the rear frame, there will be a defined contact area between the axle mounts and the axle. In any case the contact area between the axle and each axle mount must be at least 700 mm2.
6) In case the axle is fastened to the frame by means of bolts, full contact between the axle and the axle mounts must exist for a distance of a minimum of 15 mm around the fastening hole.
7) In case the axle is fastened to the frame by means of clamps, full contact between the axle and the axle mounts must exist over at least 150 degrees of the circumference of the axle and over a length of at least 25 mm.
8) The minimum distance between the outermost points of full contact between the axle and the axle mount will be 165 mm.

14.2.3.4.1 Intentionally left blank

14.2.3.4.2 Rear Axle

1) The rear axle (27) consists of a continuous, straight, circular steel tube manufactured from a single piece of steel having an outer diameter that is a minimum of 44 mm (two~ and four-men bobs), which reduces to a minimum of 32 mm (two-men bob) and 34 mm (four-men bob) to fit the bearing (28) of the rear runner carrier (29).
2) The 44 mm diameter portion of the axle must have a minimum wall thickness of 9 mm and a minimum length of 450 mm.
3) The rear axle (27) must be firmly bolted or clamped to the rear frame (31) without any resilient or shock absorbing material in between.
4) Steel spacers are allowed.
5) The rear axle (27) can be bolted either above or below the rear frame (31) (two~ and four-men bobs).
6) A steel plug may be welded or pressed into each end of the axle to provide attachment for the runner carrier retainer.
7) If a steel plug is used in the end of the axle, it must have a 6.5 mm through-hole.
8) The rear axle (27) must not be clad, cased or streamlined.

14.2.3.4.3 Intentionally left blank

14.2.3.4.4 Rear Runner Carriers

1) Each rear runner carrier consists of an upper and lower straight steel spring leaf (32 and 33) with a thickness of no less than 7.5 mm throughout (two~ and four-men bobs).
2) The vertical distance from the standing surface of the rear runner carriers to the axle centre is limited to maximally 110 mm.
3) A bearing housing (28) for the rear axle must be welded to the upper side of the upper spring leaf (32).
4) On the lower side of the lower spring leaf (33) there will be a guiding bracket (34) welded in the centre.
5) On either end of the lower spring leaf (33) there will be holding brackets (35 and 36) welded in position.
6) The bearing housing (28) has a minimum outside diameter of 50 mm (two~ and four-men bobs) and a maximum outside diameter of 55 mm (two-men bob) and 57mm (four-men bob).

7) The length of the bearing housing (28) is no less than 94 mm (two~ and four-men bobs).
8) The hole in the bearing housing (28) must be concentric with respect to a horizontal diameter.
9) The distance from the outer end of the bearing housing (28) to the straight outer edge of the upper spring leaf (32) must not exceed 6 mm.
10) As seen in the top view, the outer side of the lower spring leaf (33) must be straight and is essentially perpendicular to the axle (27); at the centre of the runner carrier, the outer side of the upper spring leaf (32), lower spring leaf (33) and guiding bracket must essentially fall above one another. (No offset is allowed.)
11) The length of the lower spring leaf (33) is 813 mm ± 3mm (two-men bob) and 940 mm ± 3 mm (four-men bob).
12) The width of the lower spring leaf (33) must be no less than 35 mm (two~ and four-men bobs) at the front and rear ends and must increase towards the centre to its maximum width, which must be no less than 79 mm (two-men bob) and no less than 89 mm (four-men bob).
13) In a top view, the inside edge of the lower spring leaf (33) facing the cowling must not be concave.
14) The front and rear holding brackets (35 and 36) have a U-shaped cross section, where the bridge of the U is welded to the lower spring leaf (33) and has a minimum thickness of 7.5 mm.
    a) The two U legs must extend vertically downward with a height of 50 mm ± 2 mm.
    b) The outside dimensions of the U legs must be 30 mm ± 2 mm.
15) The length of the holding brackets (35 and 36) must be 70 mm ± 2 mm.
16) The holding brackets (35 and 36) must be provided with runner mounting holes, the centre of which must be 31 mm ± 1 mm from the lower side of the spring leaf (33). The runner mounting holes must be symmetrical within 1 mm to the front and rear of the holding brackets (22 and 23).
17) Only the holes (35 and 36) for the head of the bolts may be countersunk.
18) The hole centers of the front and rear holding brackets (35 and 36) must have a centre distance of 743 mm ± 2 mm (two-men bob) and 870 mm ± 2 mm (four-men bob).
19) The middle guiding bracket (34) has the same dimensions as the holding brackets (35 and 36), with the exception that the U legs are connected by welded metal straps, front and rear, to hold a layer of rubber or rubber-like material at the bottom of the U (34).
20) The middle guiding bracket (34) may be additionally supported to the spring leaf (33).
21) The centre of the bearing housing (28) may be a maximum of 5 mm out of symmetry between the runner mounting holes (two~ and four-men bobs).
22) The upper spring leaf (32) is shorter than the lower spring leaf (33) and has a length of 480 mm ± 3 mm (two-men bob) and 590 mm ± 3 mm (four-men bob).
23) The minimum width at the front and rear ends of the upper spring leaf (32) is 40 mm and must increase towards the centre to its maximum width, which must be no less than 79 mm (two-men bob) and 89 mm (four-men bob).
24) In the top view, the upper spring leaf must have no concave edges.
25) The upper (32) and lower (33) spring leafs lie flat on one another and are bolted together by no less than 6 and no more than 8 bolts with hexagonal nuts.
26) There must be the same number of bolts on either side of the bearing housing (28).
    a) Only the holes for the head of the bolts may be countersunk.
    b) The minimum diameter of the bolts must be 12 mm (two-men bob) and 14 mm (four-men bob).
    c) The minimum height of the hexagonal nuts must be 10 mm (two-men bob) and 11 mm (four-men bob).
27) The runner carriers (29) must have a means of rotational elastic stabilization. If the rotational stabilization is mounted from the bottom of the runner carrier, the opening in the spring leaf may not exceed a length of 35 mm and must be within the welds of the bushing to the spring leaf.
28) The runner carrier (29) must not be cased, clad, faired or streamlined.
29) All edges of the spring leafs (32 and 33), guiding brackets (34) and holding brackets (35 and 36) may be radiused or chamfered to a maximum of 8 mm.

14.2.4 Cowling

14.2.4.1 Purpose of 14.2.4

The purpose of paragraph 14.2.4 is to promote the safety of the athletes competing in IBSF events by attempting to ensure that the cowling of a bobsleigh will provide sufficient protection in case of crashes. Furthermore, the Rules of 14.2.4 aim to promote a competition without unfair aerodynamic advantages.

14.2.4.2 General Cowling Stipulations

1) It is not allowed to use any additional material on the cowling cut-out.
2) The brake cut-out must be open.
3) No attempt may be made to reduce the area of the cut-out with any material.
4) Any unusual additions to the shape that are clearly vortex generators are not allowed.
5) Additional holes that may give an improved aerodynamic effect are also not allowed.
6) The cowling provides adequate protection for the athletes.

14.2.4.3 Cowling Dimensions

14.2.4.3.1 Cowling Width, Two-men Bobsleigh.

The distance from the farthest point to the opposite farthest point (measured on the horizontal plane according to Figure 2 of the drawings) must be:

- At a distance of 1200 mm in front of the centre line of the rear axle: minimally - 680 mm.
- At a distance of 600 mm from the centre line of the rear axle: minimally - 640 mm.
- At the centre line of the rear axle: minimally - 540 mm.

14.2.4.3.2 Cowling Width, Four-men Bobsleigh

From the centerline of the rear axle up to a distance of 1600 mm in front of the centerline of the rear axle, a constant minimum width of 700 mm must be maintained.

14.2.4.3.3 Inside Cowling Width Two-men and Four-men Bobsleigh

Measured at a height of 400 mm from the bottom of the bob, at the beginning of the cowling cut-out, the inside cowling width must be minimally 550 mm (two-men and four-men bobsleigh).

14.2.4.3.4 Cowling Height

1) The driver's seat is defined as a flat horizontal area with a minimum radius of 90 mm.
2) The measurement is taken from whatever the driver is sitting on.
3) The vertical distance from the 90 mm radius-seating surface to the centre top of the cowling cut-out must be minimally 650 mm (two~ and four-men bobs).

14.2.4.3.5 Cowling Side Region

1) The side cowling, from the region of the driver's shoulders to the centre of the rear axle, must not be higher than 650 mm as measured from the bob bottom and must have a minimum height of 580 mm.
2) The cowling must be open – starting from the region of the driver's shoulders, through to the back.
3) The width of the opening, starting 500 mm behind the beginning of the opening to the rear axle centre, must be minimally 450 mm down to a depth of 300 mm (two~ and four-men bobs).
4) From the centre of the rear axle to the hindmost point of the bob, the width of the opening must be minimally 400 mm measured down to a point 300 mm above the lowest point of the bottom of the bob (two~ and four-men bobs).

14.2.4.3.6 Cowling Miscellaneous

1) From the highest part of the driver's cut-out, there must be a vertical flange as shown in Figure 4. The vertical flange must be a minimum height of 30 mm in the centre of the driver's cut-out. The flange may taper down to the thickness of the cowl over a distance of 100 mm on either side of centre.
2) The rectangular, symmetrical inspection hole situated beneath the front axle must be at least 440 mm long and at least 160 mm wide.
3) On either side, a rubber or rubber-like membrane may be used to close the gap between the front axle and the cut-out for the front axle.

4) On the top of the brake housing, a rubber or rubber-like membrane may be used around the handles.

14.2.4.4 Cowling Shapes

14.2.4.4.1 Purpose of 14.2.4.4

The purpose of paragraph 14.2.4.4 is to promote a competition without unfair aerodynamic advantages.

14.2.4.4.2 Convex Surfaces

1) The cowling shape must be convex with the following exceptions:
   a) The bumpers (front and back)
   b) The brake cut-out
   c) The impression for the driver's push handle
   d) The articulation joint
   e) The holes for the front and back axles
   f) The transition from the side push bar into the main body of the cowling (fig.7)
      1. if the pushbars are mounted directly to the top of the side of the main body of the cowling: From a vertical plane 450 mm forward of the axis of rotation and aheight of 670 mm above the standing surface of the runner carriers.
      2. if the pushbars are mounted to a separate stanchion intersecting the main body of the cowling: In a radius of 400 mm from the center at the top of the axis of rotation of the push bar.

   g) & h) The area around the brakeman's push handles that is within a radius of 250 mm from the point of the brakeman's push handles farthest removed from the centerline of the rear axle.

2) The following four specific areas will be controlled:
   a) From the front of the bob to the driver cut-out, every intersection line between a rotating cutting plane and the cowling, refer to Figure 3A
   b) From the front of the bob to the rear of the bob, every intersection line between the vertical cutting planes and the cowling above the widest point or at least above the bumpers, refer to Figure 3B;
   c) From the beginning of the driver's cut-out to the rear of the bob, the intersection line between a horizontal cutting plane and the cowling, at a height of 350 mm above the standing surface of the runner carriers, refer to Figure 3C;
   d) On the bottom of the bob, every intersection line between a longitudinal vertical cutting plane as well as every intersection line between a perpendicular vertical cutting plane and a 240 mm wide symmetric band centered on the bottom of the bob. Outside of the 240 mm band, the only exceptions would be the impressions created for the runner and the runner carrier clearance, refer to Figure 3D.

14.2.5 Connection between Frame and Cowling

14.2.5.1 Purpose of 14.2.5

The purpose of 14.2.5 is to control the amount of suspension that can be achieved in the connections between cowling and frame.

14.2.5.2 Definition of Connection between Cowling and Frame

All elements that mechanically attach the cowling as defined and controlled by 14.2.4 to the frame as defined and controlled by 14.2.3 are considered to jointly form the connection between cowling and frame and to be controlled by 14.2.5

14.2.5.3 General Stipulations

1) Any measurements with regard to travel of the cowling relative to the frame are relative to the horizontal plane of reference, with the bobsleigh in an unloaded condition.
2) Within the context of 14.2.5, the term 'downward' is used with reference to the unloaded condition of the bobsleigh while positioned on a horizontal reference plane.

3) Within the context of 14.2.5, the limitation of freedom of movement of the cowling relative to the frame is defined with reference to the unloaded condition of the bobsleigh while positioned on a horizontal reference plane.
4) Article 14.1.3.3.1 (Bobsleigh suspension) applies

14.2.5.4 Locations of points of mounting of Cowling to Frame

1) The cowling must be attached to the frame by means of at least four mounting brackets that to restrict the vertical movement of the cowling relative to the frame.
2) Two of these four mounting brackets must be positioned symmetrically relative to the plane of symmetry of the bob, in a vertical plane that is perpendicular to the plane of symmetry of the bobsleigh and within 100 mm of most forward part of the rear part of the frame excluding the articulation bolt (Figure 23).
3) Two of the four mounting brackets must be positioned symmetrically relative to the plane of symmetry of the bob and must be mounted on or to the outside of the longitudinal frame member. (Figure 23).

14.2.5.5 Freedom of Movement of Cowling relative to Frame

1) The movement of the cowling relative to the frame, allowed by the mounts of the cowling controlled by 14.2.5.4 and 14.2.5.6 must be limited to 5 mm in the downward direction by use of travel stops.
2) Irrespective of the suspension elements used within the context of 14.2.5.4 and 14.2.5.6, the travel of these suspension elements must be limited by hard travel stops of sufficient rigidity to guarantee effective limitation of cowling movement.
3) The forward travel stops limiting the vertical movement of the cowling must be fully positioned within the confines of 14.2.5.4. In case the travel stops are not an integral part of the mounting brackets, the forward travel stops must be completely positioned within 100 mm of most forward part of the rear part of the frame excluding the articulation bolt (14.2.5.4.2) (figure 23).
4) The rear travel stops must be mounted on or to the outside of the longitudinal frame member and completely within 120 mm forward and backward of the centerline of the rear axle. (14.2.5.4.3) (Figure 23).

14.2.5.6 Materials used in Cowling to frame Connection

1) In the mounts between the cowling and the frame, rubber or rubber-like material may be used.
2) The rubber or rubber-like material used in the connection between frame and cowling must be homogeneous.

14.2.6 Bumpers

14.2.6.1 Purpose of 14.2.6

The purpose of 14.2.6 is to attempt to ensure that the elements of the bobsleigh that come into contact with the walls of the track are suitable for that purpose. Furthermore, 14.2.6 aims to promote that no unfair aerodynamic advantages can be achieved. Finally art. 14.2.6. is directed to preserve the integrity of the track.

14.2.6.2 General Stipulations

It is the responsibility of the bob manufacturers to produce the bumpers with sufficient strength to withstand repeated contact with the walls.

14.2.6.3 Bumper Positions and Dimensions

1) The front tips of the front-runners must be covered by the cowling in any position of the runners.
2) Distance from the standing surface of the runner carriers to the lower edge of the bumpers is limited to:
   - Front bumpers
     - maximally 190 mm (two-men bob);
     - maximally 200 mm (four-men bob);
   - Rear bumpers
     - maximally 200 mm (two-men bob and four-men bob) .

3) The rear bumpers must have a minimum height of 50 mm (measurement taken vertically with regard to the standing surface) over a length of minimum 200 mm.
4) The centre of the front bumpers, referring to a length of 300 mm, must be at least 300 mm from the centre of the front axle (two~ and four-men bobs).
5) Above the front bumper 300 mm forward from the centre of the front axle, the distance from the outside of the bumper to the cowling, measured horizontally and perpendicular to the centre line of the bob, must not exceed 195 mm (two-men bob) and 160 mm (four-men bob), refer to Figure 2.
6) The distance from the farthest point of one bumper to the farthest point of the opposite bumper must be:
   - Front:
     - 860 mm ± 10 mm (two-men bob);
     - 870 mm ± 10 mm (four-men bob).
   - Rear:
     - Minimally 800 mm (two-men bob).
     - Minimally 830 mm (four-men bob).
7) The distance from the centre of the rear axle (27) to the hindmost point of the rear bumper must be:
   - Minimally - 300 mm (two~ and four-men bobs);
   - Maximally - 760 mm (two~ and four-men bobs).

14.2.6.4 Bumper Shapes

1) The upper and lower edges of the rear bumpers must have a radius of between 5 and 8 mm.
2) The lower edge of the front bumpers (Figure 5) must have a radius of no less than 10 mm for a minimum length of 300 mm. In an upward direction they must be straight for a minimum length of 35 mm, subsequently passing into the upper edge with a minimum radius of 35 mm.
3) The point at which the bumper contacts the wall must be within the defined minimum length of the bumper. In a top view, the bumpers must be arc-shaped with a minimum radius of 200 mm for a distance of 100 mm ahead and behind the widest part of the bumper area (Figure 6).

14.2.6.5 Transitions to Cowling

1) The connecting elements between the front bumpers and the bob cowling must have a height of a minimum of 80 mm over the minimal length of the front bumpers.
2) The connecting elements between the rear bumpers and the cowling must have a height of a minimum of 50 mm over the minimal length of the rear bumpers.
3) In a top view and in a side view the front of the connecting elements of the front bumpers must form a continuous, not concave line with the tip of the cowling.

14.2.7 Runners

14.2.7.1 Purpose of 14.2.7

Purpose of 14.2.7 is to promote a fair competition while controlling the costs of participating and administering in IBSF events by banning the use of exotic materials and (surface) treatments.

14.2.7.2 Runner material

1) All runners must be produced in a solid piece of standard material according to IBSF specifications.
2) The material specifications, selected by the IBSF, will guarantee that all pre-machined pieces of steel are the same.
3) The standard material is produced and distributed by a factory designated by the IBSF
4) The material is supplied in the form of a pre-machined section, i.e. a section that has been ground on both sides, one of which is marked.
5) The marking must always be present on the runners without being changed in any way.

14.2.7.3 Runner Treatment

1) All types of treatment are forbidden, including those that even cause only a local variation of the physical characteristics and / or the composition and / or the structure of the material.
2) No plating and / or coating is allowed.

14.2.7.4 Runner Dimensions

1) The height of the steel body, between the front and rear fastening brackets, must be a minimum of 35 mm (two-men bob) and a minimum of 40 mm (four-men bob).
2) The forward portion of the runner from 50 mm behind the tip to the front of the front fastening bracket must be no less than 30 mm high (two~ and four-men bobs).
3) The front tip of the runner, in the side view, must have a minimum radius of 10 mm (two~ and four-men bobs).
4) The top of the front-runner tip must be a minimum of 60 mm above the standing surface.
5) The rear lower tip of the runner must have a minimum radius of 50 mm (two~ and four-men bobs).
6) At a distance of 10 mm from the rear tip of the runner, the lower surface must be a minimum of 25 mm above the standing surface (two~ and four-men bobs).
7) The distance from the front tip of a front runner to the centre of the middle supporting bracket must be 500 mm ± 30 mm (two-men bob) and 540 mm ± 30 mm (four-men bob).
8) The overall length of the rear runners must not exceed 1200 mm (two-men bob) and 1300 mm (four-men bob).
9) The top surface of the middle supporting bracket must be flat and horizontal and must form a rectangle, minimum width 13 mm, minimum length 60 mm. The 60 mm dimension must be maintained down to the top of the runner.
10) The top of the middle supporting bracket must be a minimum of 15 mm above the top of the runner.
11) At the intersections of the middle supporting bracket with the top surface of the runner, there must be a minimum radius of 2 mm.
12) The runner must have a thickness of 14 mm ± 1 mm (two~ and four-men bobs). This thickness must be maintained for a minimum distance of 10 mm from the top of the runner.
13) The cross-sectional radius of the runner, at the running surface, must be a minimum of 4 mm (two-men bob) and 6 mm (four-men bob). This radius will be measured over 120° and will correspond to an arc height of 2 mm (two-men bob) and 3 mm (four-men bob).
14) The fastening brackets must have a minimum length of 60 mm (two~ and four-men bobs) measured at a height even with the upper edge of the runner.
15) The area surrounding the mounting hole must maintain a minimum thickness of 10 mm to the periphery of the fastening bracket. The transition region, tangent to the radius, and extending to the full width portion of the runner, must not be concave.
16) The mounting holes are at a minimum distance of 33 mm and a maximum of 60 mm (two-men bob) and a minimum of 38 mm and a maximum of 65 mm (four-men bob) from the bottom surface of the runner.

14.2.7.5 Connection between Runners and Runner Carriers

1) The runners must be attached to the runner carriers using minimally 14 mm thread (two-men bob) and minimally 16 mm thread (four-men bob) bolts with hexagonal nuts.
2) No portion of the bolt may be smaller in diameter than 12.5 mm. (two-men) and 14.5 mm. (four-men)
3) The minimum height of the hexagonal nuts must be 11 mm (two-men bob) and 13 mm (four-men bob).
4) The nuts must not be welded to the holding brackets of the runner carriers and they must not be cased, clad or streamlined.

14.2.7.6 Runners Miscellaneous

1) The runner is shown in Figure 21.
2) Any aerodynamic covering of the runners is prohibited.

14.2.8 Detachable, moveable and/or adjustable parts

14.2.8.1 Purpose of 14.2.8

The purpose of 14.2.8 is to promote that the detachable, movable and/or adjustable parts of a bobsleigh are suitable for their intended purpose and do not pose a risk for bystanders and/or those participating in IBSF events. Also, the purpose of art. 14.2.8. is to promote a fair competition.

14.2.8.2 Brakes

1) Only harrow type brakes are allowed.
2) The brake cut-out must be open. A rubber membrane around the brake handles may be used.
3) No attempt may be made to reduce the area of the cut-out with any material.
4) The brake is actuated with two separately activated handles. In a four-men bob, the handles must be located either side of the brakeman.
5) The geometry of the brake must be designed in such a way that when applied by a single handle, with a full team complement, none of the brake components are permanently deformed (Figure 20).
6) The length of the handle, measured from the centre of the pivot, must be minimum 220 mm (two-men bob) or 350 mm (four-men bob).
7) The length of the braking arm measured from the centre of the pivot to the top of the harrow must be minimum 150 mm (two~ and four-men bobs).
8) The height of the harrow must be minimum 35 mm (two~ and four-men bobs).
9) The height of the teeth of the harrow must be minimum 20 mm (two~ and four-men bobs).
10) There will be a minimum of 5 teeth over a total minimum length of 230 mm (two-men bob) and a minimum of 6 teeth over a total minimum length of 280 mm (four-men bob).
11) The teeth must be able to reach and cut the ice for a minimum of 50 mm below the runner standing surface.
12) Rubber or rubber-like material may be used in the retraction mechanism of the brakes

14.2.8.3 Push bars

1) Both the driver's side push bar and the side push bars must be retractable.
2) The height of the side push bar for the second or third team member (four-men bob) must be the same in the extended and retracted positions.
3) When retracted, the side push bars must be essentially flush with the surface of the cowling.
4) The brakeman's handles must be immovable.
5) The brakeman's push handles (two~ and four-men bobs) as well as the side push bars (four-men bob) must have a minimum height of 670 mm and a maximum height of 870 mm, measured from the standing surface of the runner carriers.
6) The total width of the side push bars (four-men bob) for the second and third members must not exceed 750 mm.
7) When the four-men bob side push bars have a vertical rotating axis, the push bar stanchion must be at least two-thirds the width of the push bar, for at least two-thirds of the push bar length with a maximum gap of 3 mm.
8) The front of the push bar stanchion tapers down to the cowling at a point not more than 450 mm ahead of the axis of the push bar (Figure 7).
9) For the purpose of retracting the push bar(s), rubber or rubber-like materials may be used.

14.2.8.4 Foot Rests and Hand Holds

Athletes must have means to hold on to the sled in case of a crash. Any sled must therefore have a sufficient number of handholds.

14.2.8.5 Steering ropes and Steering handles

Steering ropes that connect the steering handles to the steering mechanism must be of sufficient strength to withstand the forces encountered in practice and competition. Steering handles must be constructed in such a way that they will withstand the stresses encountered during practice and competition. Steering handles may be kept in place by the use of rubber or rubber-like material.

14.2.8.6 Carrying Bars

Bobsleighs may be fitted with carrying bars in the front bumper to facilitate transportation. In that case, carrying bars must be fitted in such a way that they remain retracted from start to finish and that under no circumstances they become detached during a heat. Rubber or rubber-like material may be used to keep the carrying bars in place.

14.2.8.7 Padding materials

Padding on the inside of the bobsleigh, used to protect athletes from injuries and that is in accordance with the rules of 14.2.3 and 14.2.4 may contain rubber or rubber-like material.

14.3 Miscellaneous

14.3.1 Purpose of 14.3

14.3.2 Principles and Properties

14.3.2.1 Applicability

14.3.2.2 Tolerances and Limits

14.3.2.2.1 Use of measuring equipment

1) Equipment used to establish whether bobsleigh equipment complies with the Rules must be used in a professional manner and according to the manufacturer's instructions.
2) The systematic and non-systematic errors of the testing equipment used for testing bobsleigh materials must be known to the materials inspectors.
3) Systematic and non-systematic errors of the measuring equipment used must be considered when testing bobsleigh materials. Tolerances of testing equipment should be discounted to the advantage of the teams or athletes.
4) In case of in situ-testing measurements indicating a violation of the rules that could result in disqualification, the measuring process must be repeated under controlled conditions

14.3.2.2.2 Quality of testing equipment

1) The testing equipment used for testing bobsleigh materials should be fit for that purpose.
2) All measuring instruments used in bobsleigh testing must be fitted with a label indicating the measuring tolerance
3) Passameters with equivalent tolerances may be used
4) Radiuses and convexity must be tested by using IBSF patterns.
5) (Surface) Harness must be measured by using calibrated measuring equipment
6) The composition of bobsleigh materials must be established by using calibrated measuring equipment.
7) Calibration of testing equipment must be performed on a regular basis and according to manufacturer's recommendations. In case of calipers, micrometers and Passameters, calibration standards must be available during testing.
8) Equipment used to perform in-situ measurements must be calibrated for that purpose.

14.3.3 List of Drawings and Figures

1) Figure 1 is a side view and
2) Figure 2 is a top view of a bob resting on a horizontal surface.
3) Figures 3 A, B, C and D define the planes with which the 'concave shape' rules will be controlled.
4) Figure 4 clarifies the flange required at the front of the pilot's cut-out.
5) Figure 5 shows the controlled dimensions of the front bumper cross-section.
6) Figure 6 defines the shape of the front and rear bumpers from a top view and at the point of contact to the wall.
7) Figure 7 clarifies dimensions and tolerances of the side push bar stanchion.
8) Figures 8 and 9 depict the essential constructive elements top view and (partly sectional) side view, respectively, with dimensions corresponding to a two-men bob.

9)
10) Figure 10 is a (partly sectional) front view of the frame and front axle region of a two-men bob.
11) Figure 11 depicts the top and side views of the runner carriers of a two-men bob.
12) Figure 12 depicts the front view and bottom view of the front axle of a two-men bob.
13) Figure 13 depicts the rear axle of a two-men bob.
14) Figures 14 and 15 depict the essential constructive elements top view and (partly sectional) side view, respectively, with dimensions corresponding to a four-men bob.
15)
16) Figure 16 is a (partly sectional) front view of the frame and front axle region of a four-men bob.
17) Figure 17 depicts the top and side views of the runner carriers of a four-men bob.
18) Figure 18 depicts the front and bottom view of the front axle of a four-men bob.
19) Figure 19 depicts the rear axle of a four-men bob.
20) Figure 20 depicts the construction of the brake (two and four-men bob).
21) Figure 21 shows the essential dimensions of the runners (two and four-men bob).
22) Figure 23 depicts the connection between the cowling ad the frame, the position relative to the division line of the forward travel stops limiting the movement of the cowling relative to the frame and the position relative to the rear axle of the rear travel stops limiting the movement of the cowling relative to the frame.

15. DRAWINGS

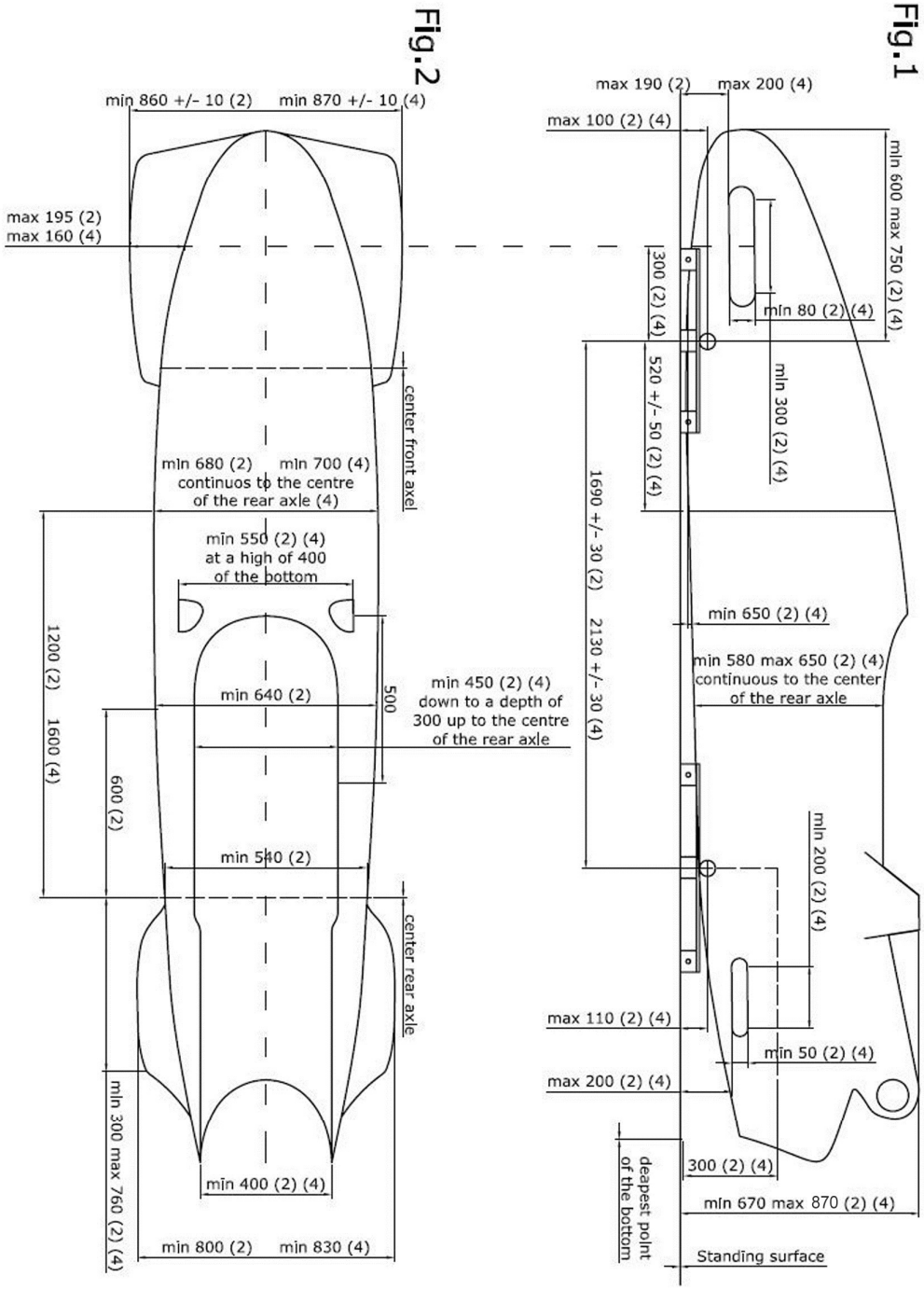
Fig.1
max 190 (2)
max 200 (4)
max 100 (2) (4)
min 600 max 750 (2) (4)
min 80 (2) (4)
300 (2) (4)
520 +/- 50 (2) (4)
min 300 (2) (4)
1690 +/- 30 (2)
2130 +/- 30 (4)
min 650 (2) (4)
min 580 max 650 (2) (4)
continuous to the center
of the rear axle
min 200 (2) (4)
max 110 (2) (4)
min 50 (2) (4)
max 200 (2) (4)
300 (2) (4)
min 670 max 870 (2) (4)
deapest point
of the bottom
Standing surface
Fig.2
min 860 +/- 10 (2)
min 870 +/- 10 (4)
max 195 (2)
max 160 (4)
center front axel
min 680 (2)
min 700 (4)
continuos to the centre
of the rear axle (4)
min 550 (2) (4)
at a high of 400
of the bottom
1200 (2)
1600 (4)
min 640 (2)
500
min 450 (2) (4)
down to a depth of
300 up to the centre
of the rear axle
600 (2)
min 540 (2)
center rear axle
min 300 max 760 (2) (4)
min 400 (2) (4)
min 800 (2)
min 830 (4)
All measurments in mm

Fig.3

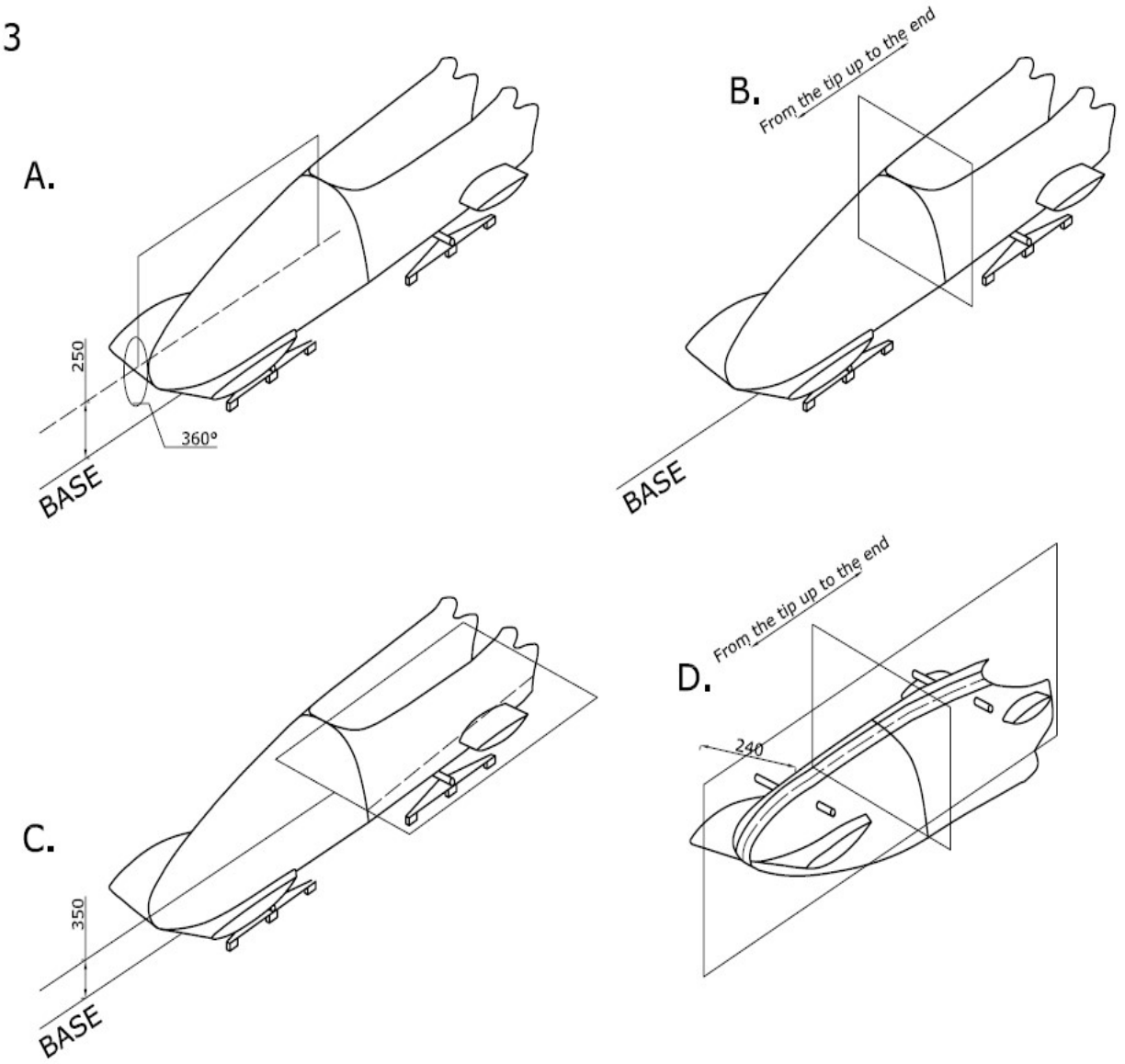

All measurments in mm

Fig.4

View A of Fig. 1 and 2

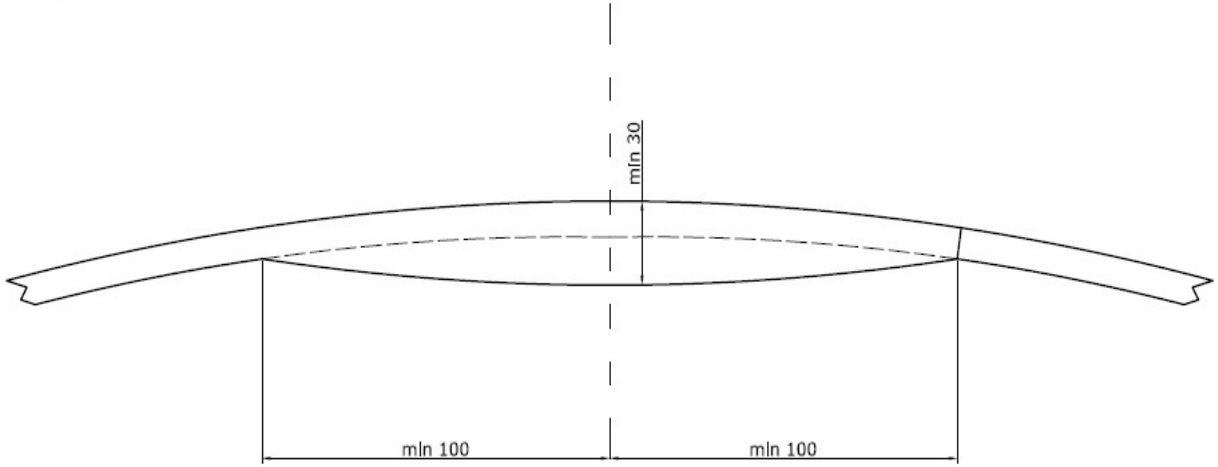

All measurments in mm

Fig.5

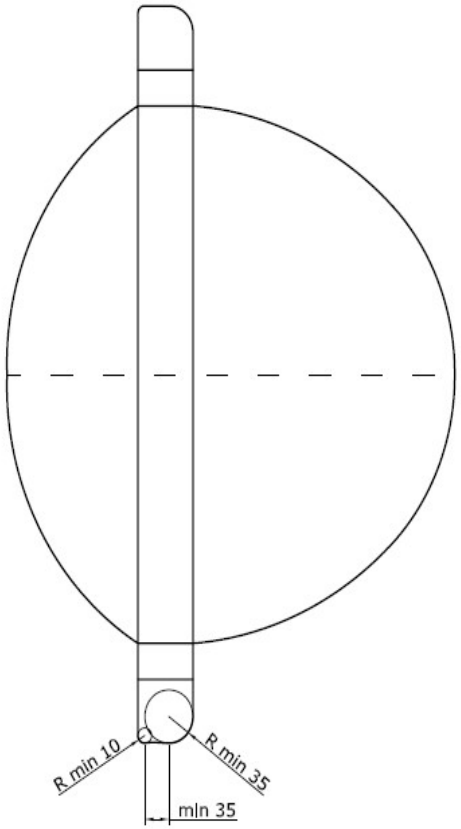

Front bumpers

Fig.6

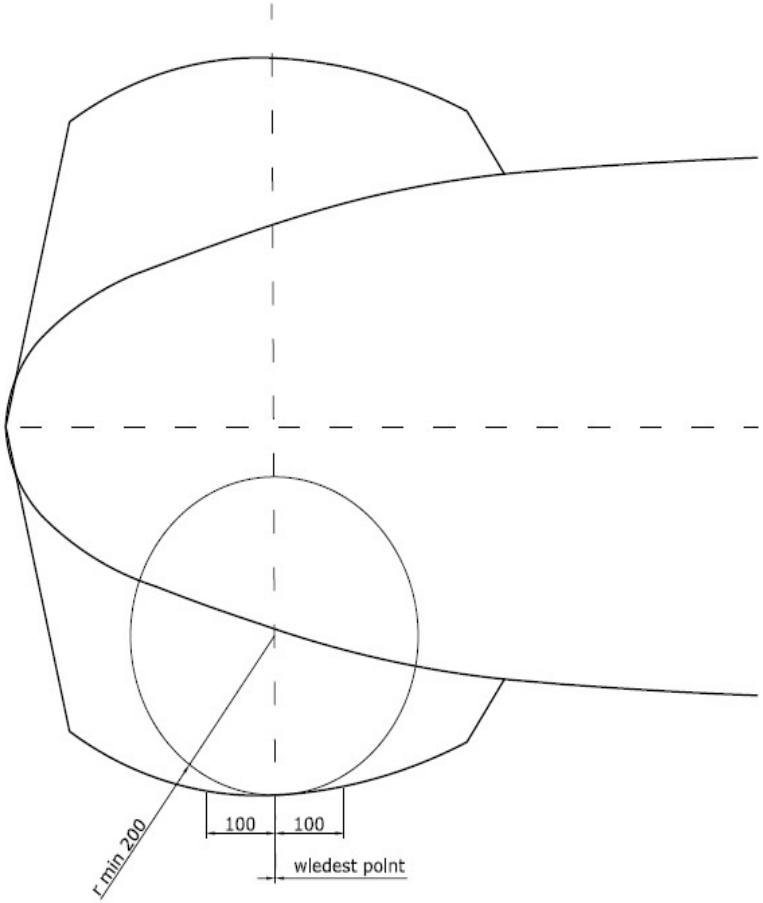

Front and back bumpers

All measurments in mm

Fig. 7: Side pushbar dimensions and maximum stanchion dimensions (allowed areas of concavity)

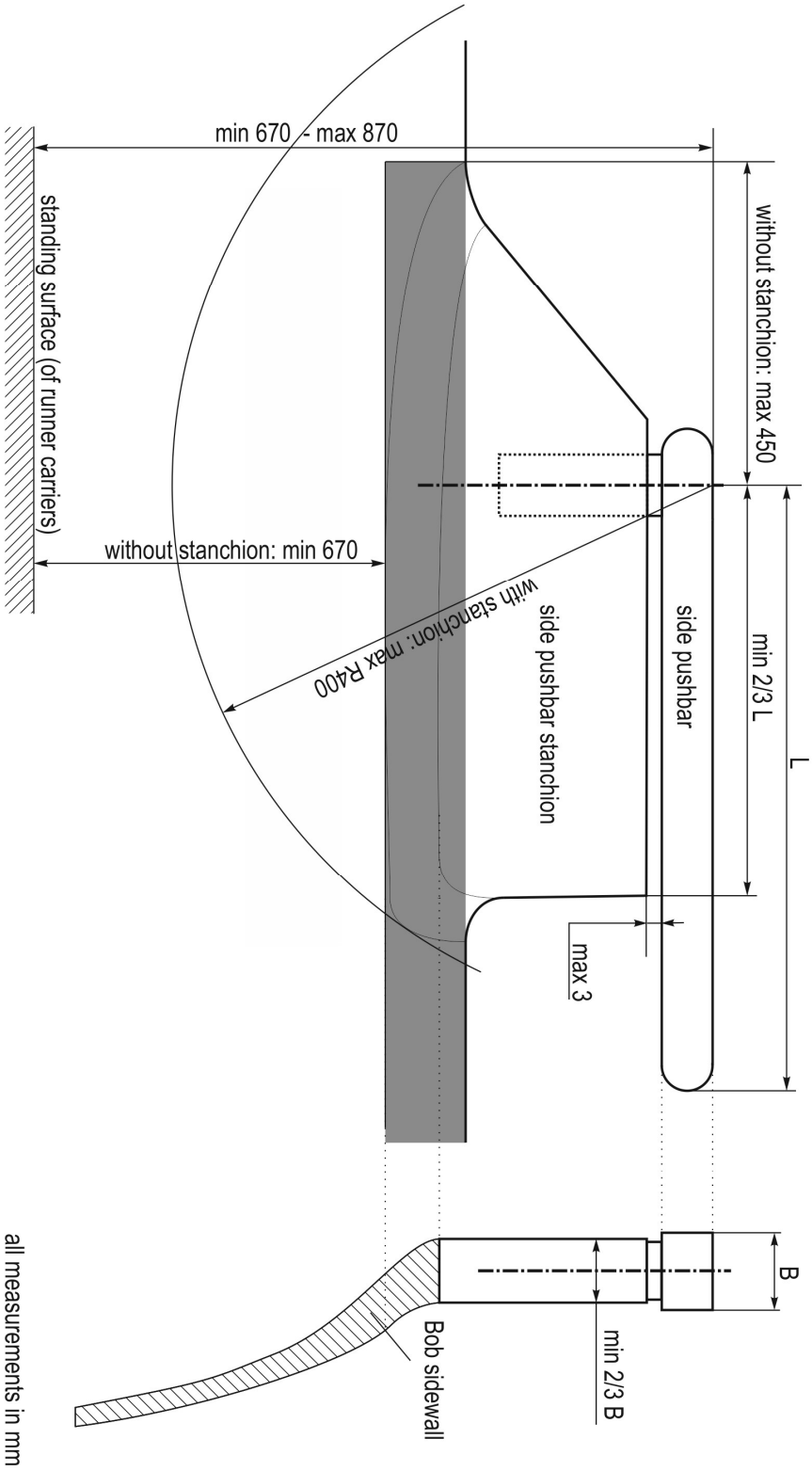

Fig.8

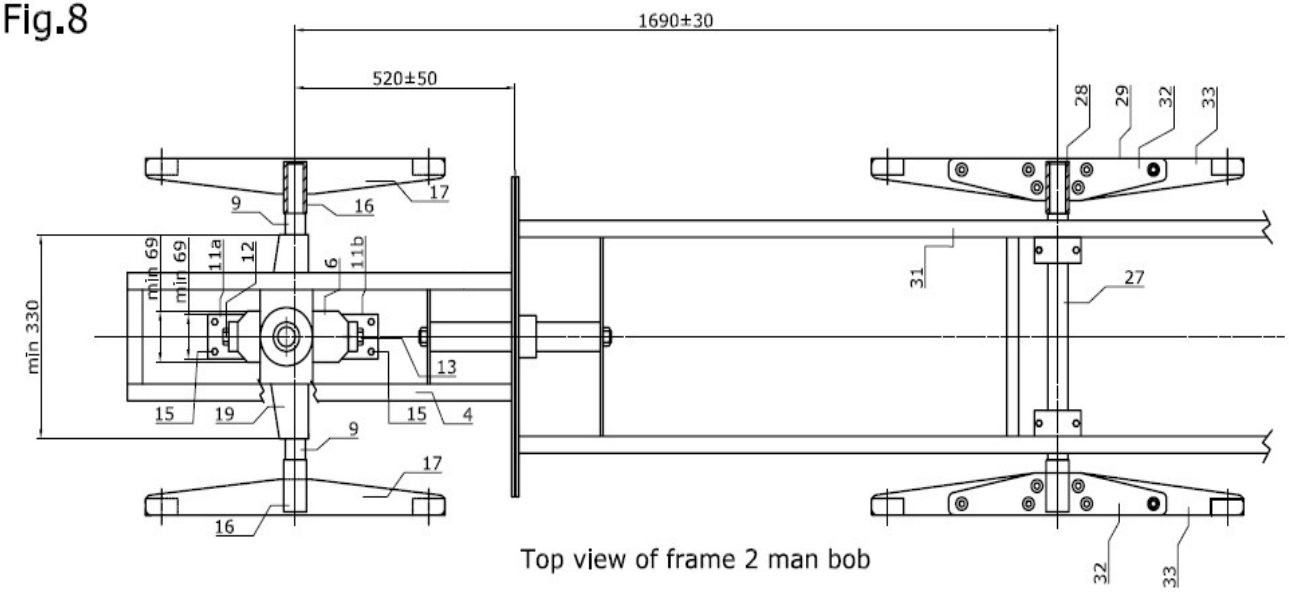

Top view of frame 2 man bob

Fig.9

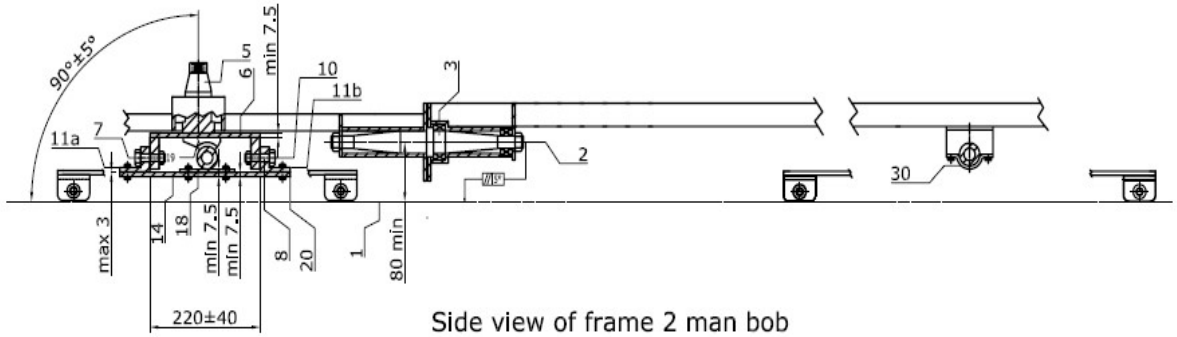

Side view of frame 2 man bob

All measurments in mm

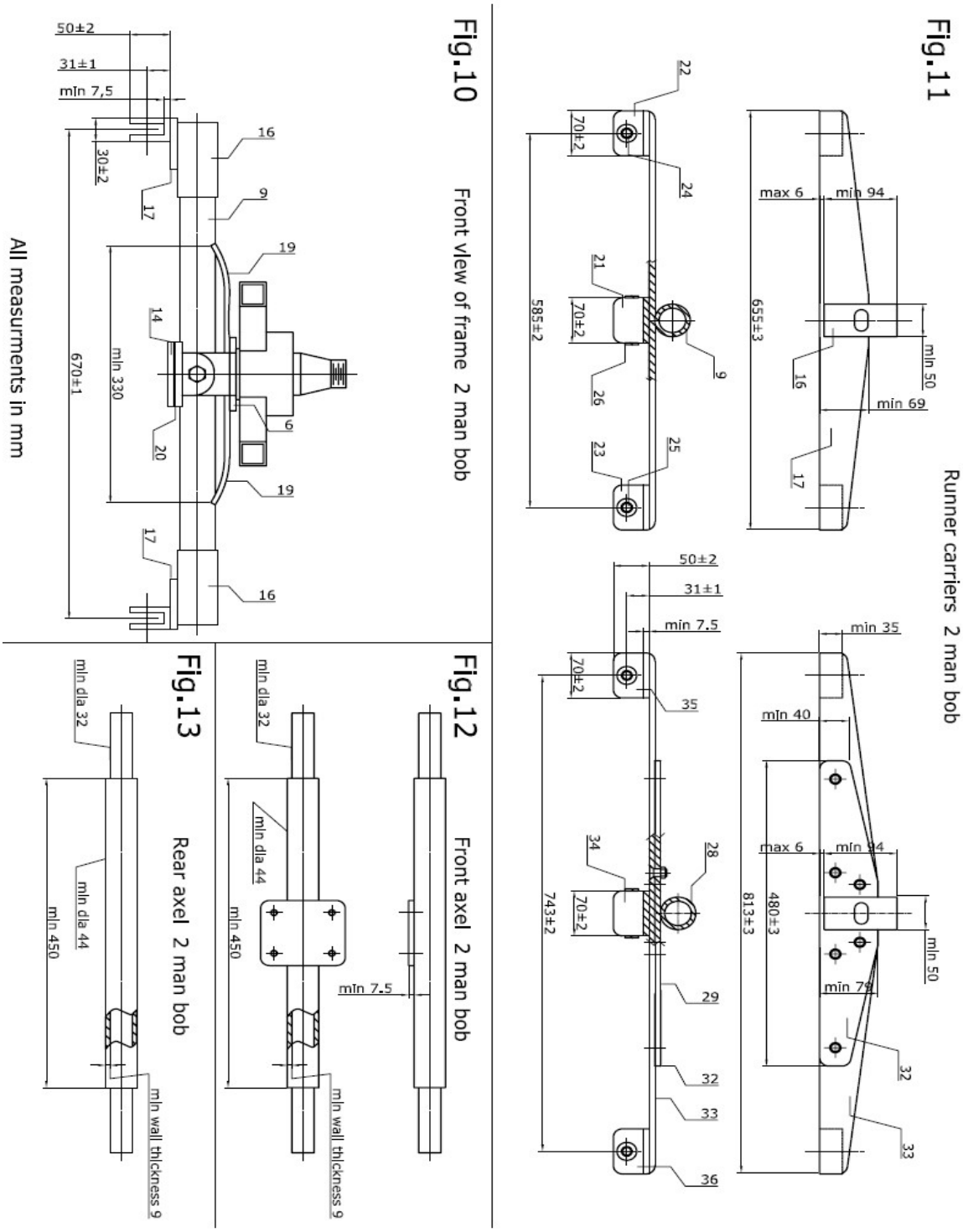
Fig.11
Runner carriers 2 man bob
max 6
min 94
min 50
min 69
655±3
16
17
22
24
70±2
21
70±2
26
23
25
9
585±2
50±2
31±1
min 7.5
35
34
28
29
32
33
36
743±2
min 35
min 40
max 6
min 94
480±3
813±3
min 50
min 79
32
33
Fig.10
Front view of frame 2 man bob
50±2
31±1
min 7,5
30±2
16
9
17
19
14
min 330
670±1
6
20
19
17
16
All measurments in mm
Fig.12
Front axel 2 man bob
min 7.5
min dia 32
min dia 44
min 450
min wall thickness 9
Fig.13
Rear axel 2 man bob
min dia 32
min dia 44
min 450
min wall thickness 9

Fig.14

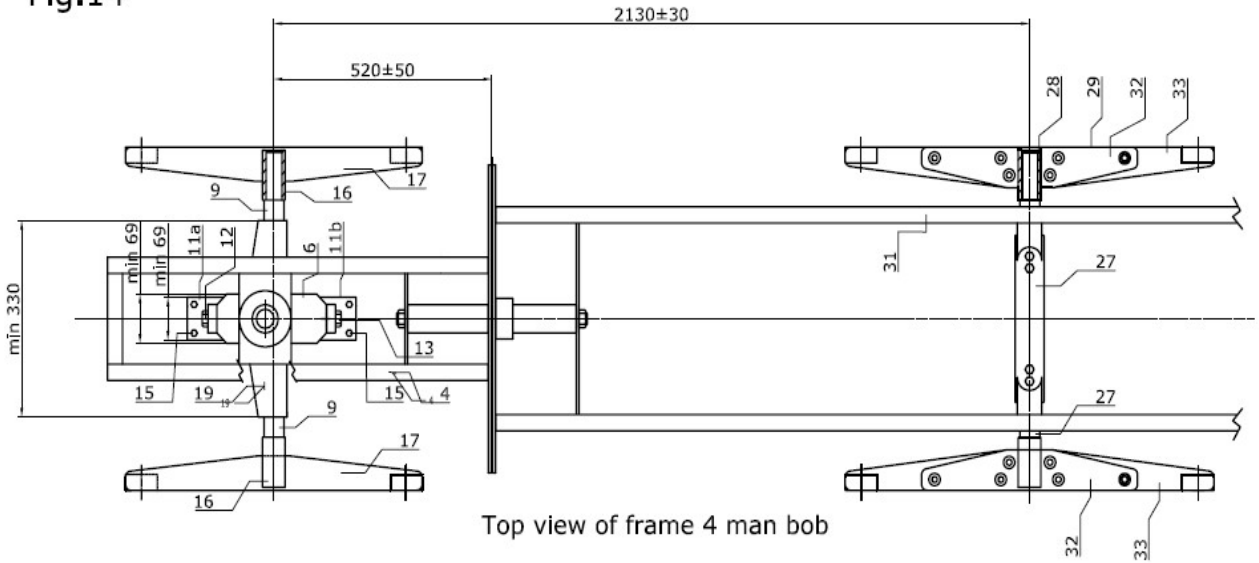

Top view of frame 4 man bob

Fig.15

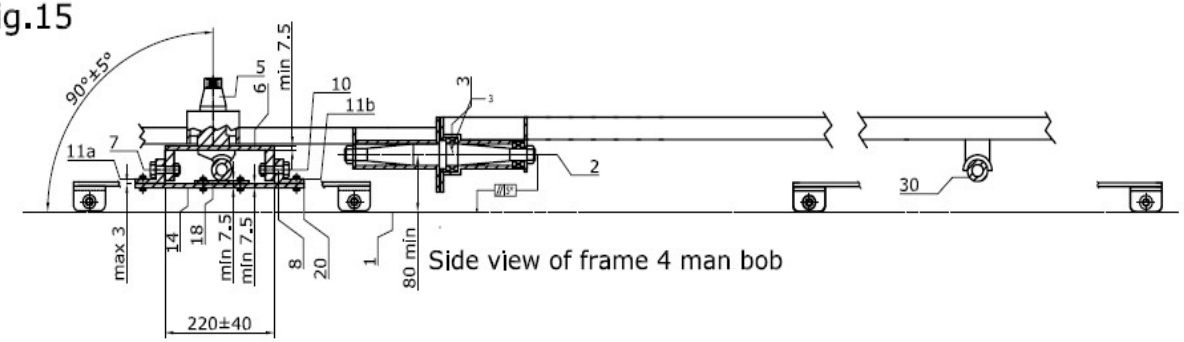

Side view of frame 4 man bob

All measurments in mm

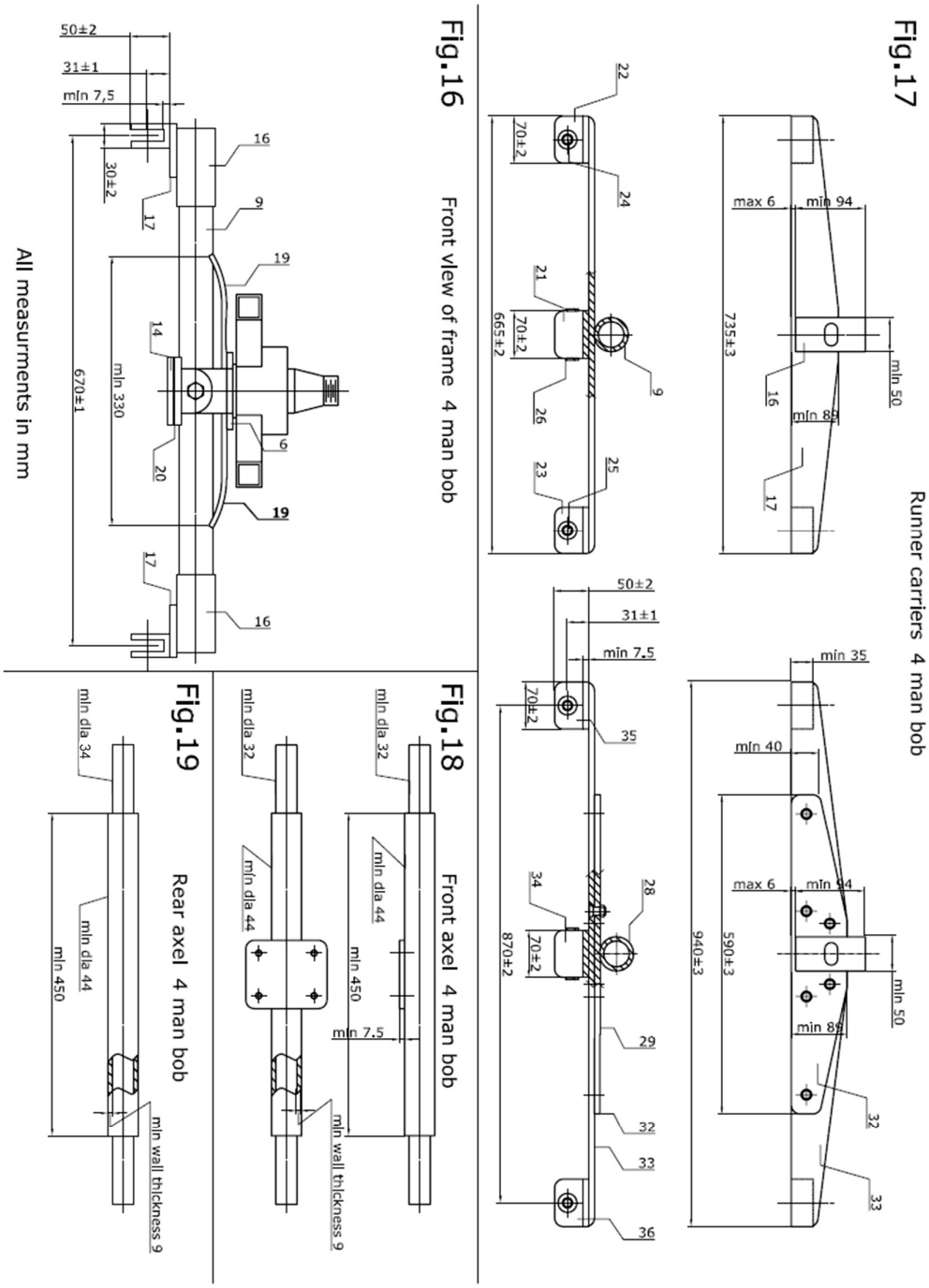
Fig.17
Runner carriers 4 man bob
max 6
min 94
min 50
735±3
16
min 88
17
min 35
min 40
max 6
min 94
590±3
940±3
min 50
min 88
32
33
22
70±2
24
21
70±2
665±2
26
9
25
23
50±2
31±1
min 7.5
70±2
35
34
70±2
870±2
28
29
32
33
36
Fig.16
Front view of frame 4 man bob
All measurments in mm
50±2
31±1
min 7,5
30±2
17
16
9
19
14
min 330
670±1
20
6
19
17
16
Fig.18
Front axel 4 man bob
min dia 32
min dia 44
min 450
min 7.5
min wall thickness 9
min dia 32
min dia 44
min wall thickness 9
Fig.19
Rear axel 4 man bob
min dia 34
min dia 44
min 450
min wall thickness 9

Fig.20

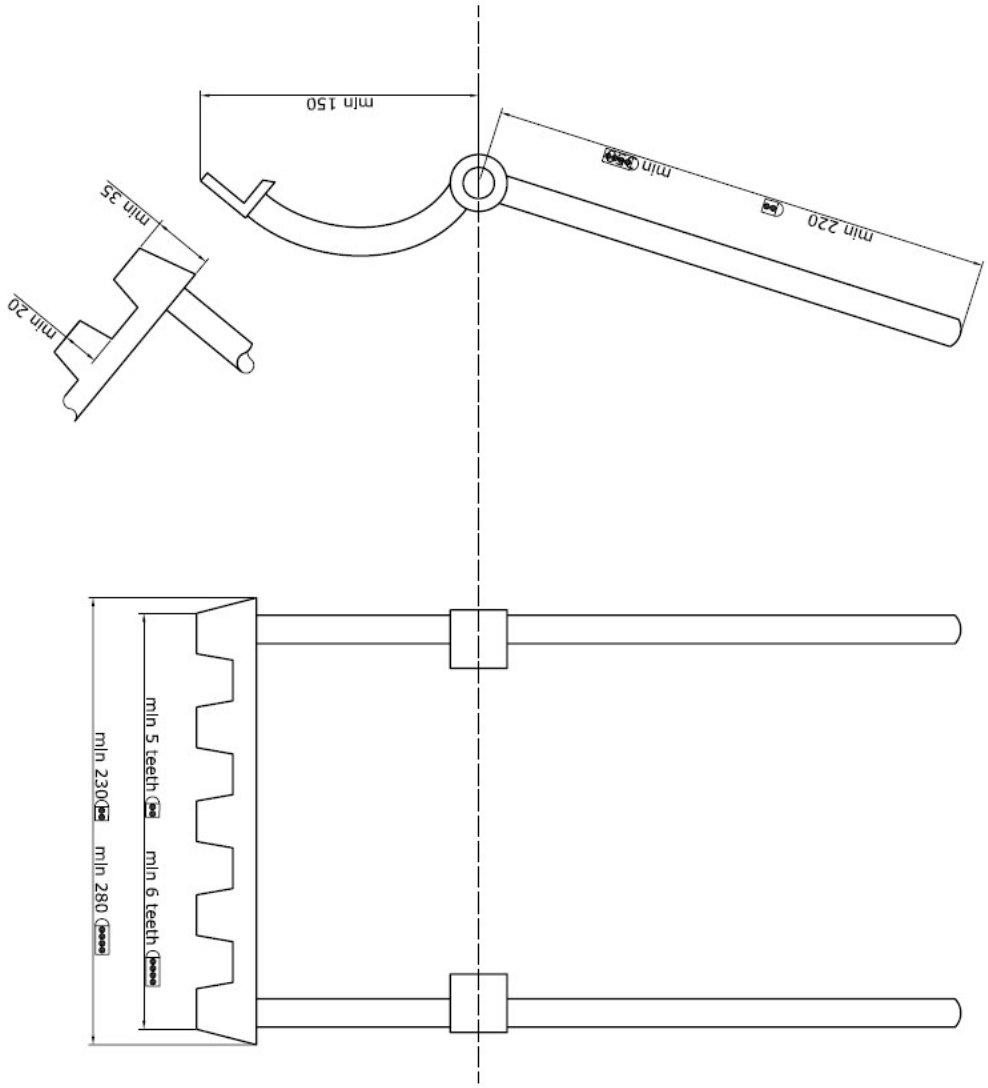

All measurments in mm

Fig.21

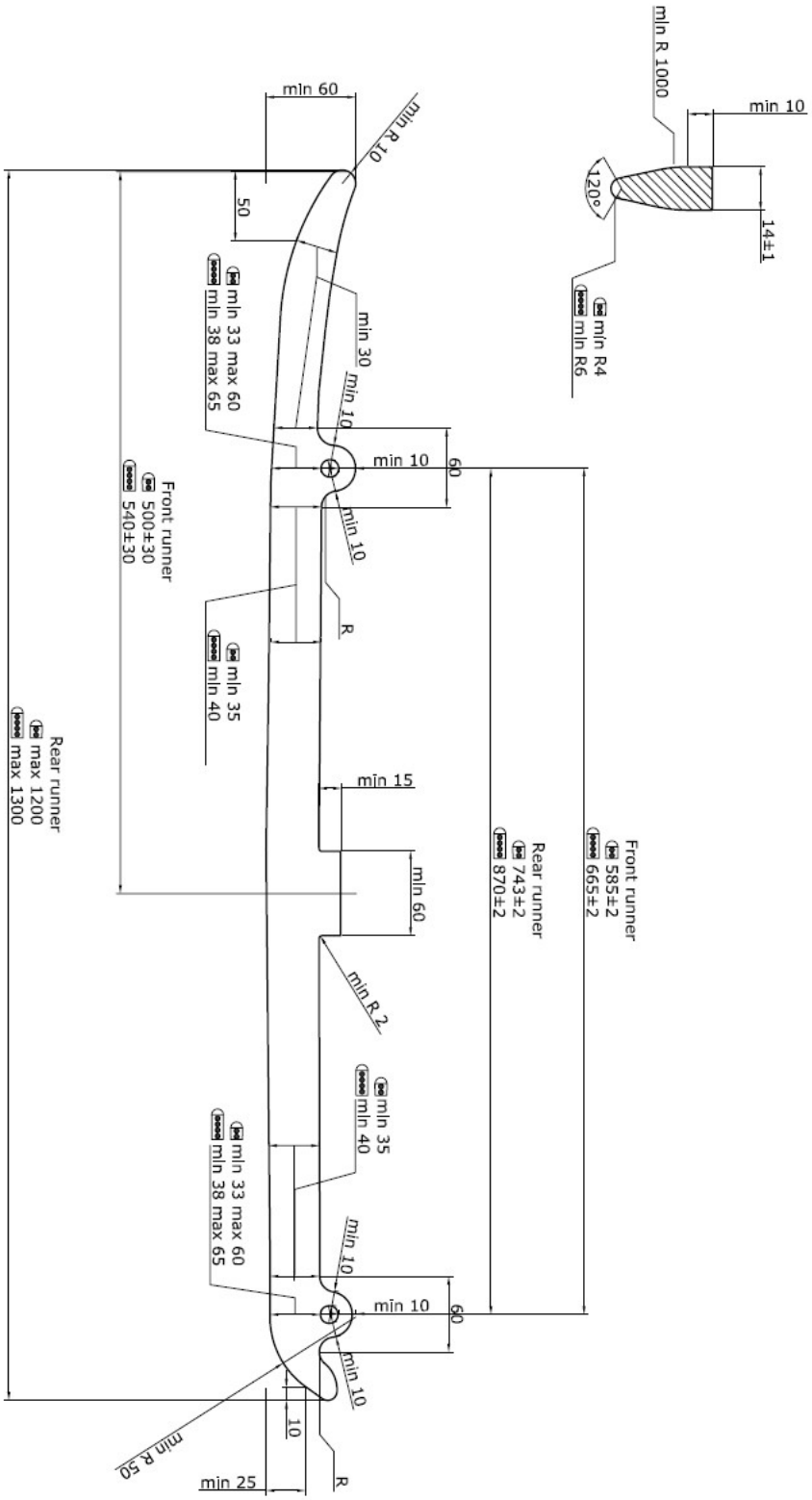

All measurments In mm

15.1

Fig. 23: Rear frame: required mounting points of cowling-to-frame-brackets and travel stops

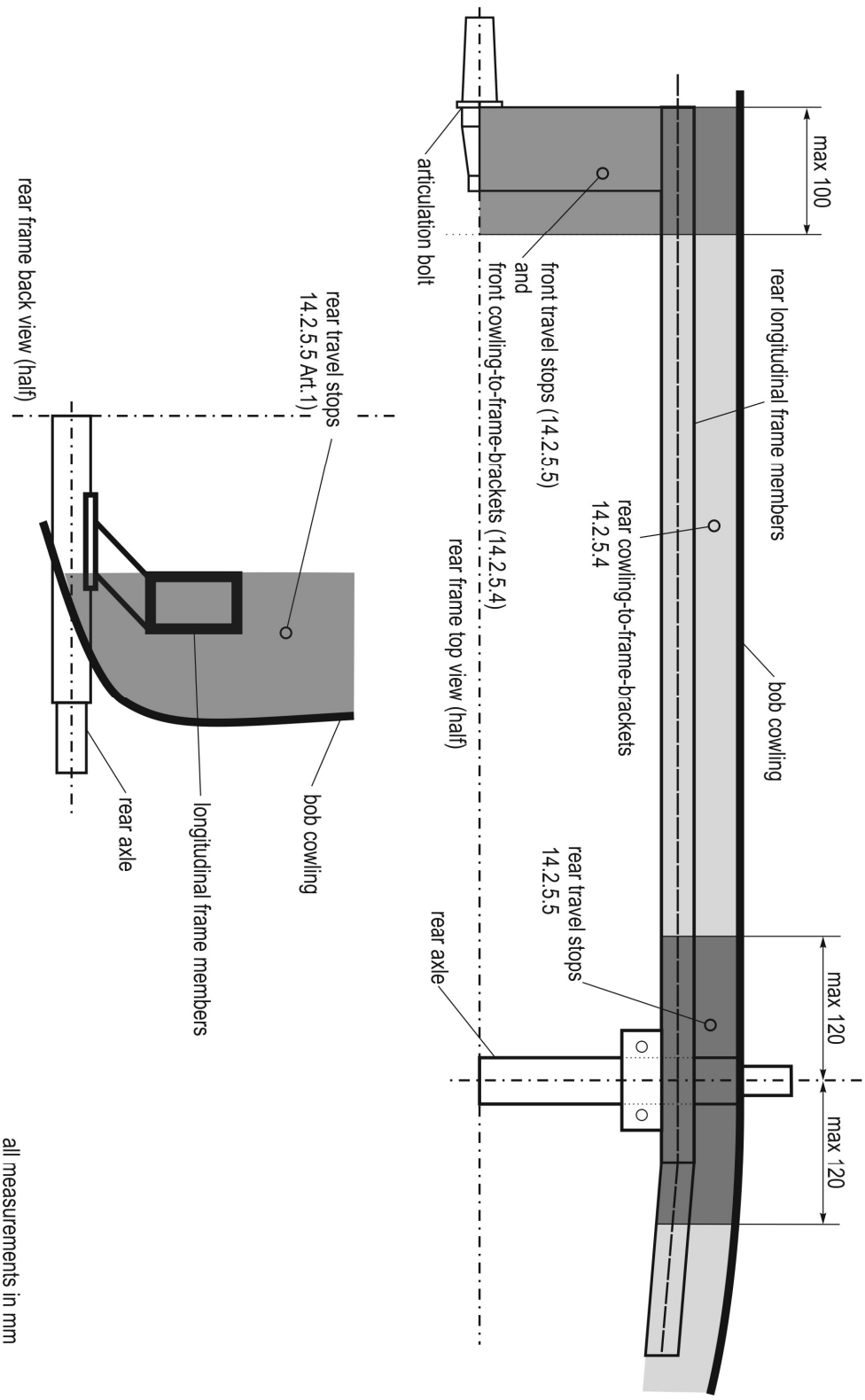

15.1 APPENDIX 3: MATERIAL SEIZURE

Procedure for the seizure of sled components for conformity tests.
Empowered by the Jury and in the presence of at least one of its members, the IBSF Materials Committee responsible directs the official representative of the Federation to which the sled belongs to remove or disassemble the component(s) to be tested.

15.2 The Form

Upon collecting the component(s), the IBSF Materials Committee will fill in a form drawn up in six copies, stating:

- General data of the team / athlete whose sled is being tested
- The name of the competition and the venue
- The date and time
- A description of the component(s) taken
- The type of test(s) the laboratory is required to perform
- A blank space for entering the laboratory analysis results

The following people will sign the form:

- The Jury President
- The representative of the IBSF Materials Committee
- The team captain or official representative of the Federation to whom the sled belongs

The six copies of the form will be sent to the following:

- One copy to the Jury President
- One copy to the IBSF President (via the Secretary General)
- One copy to the Chairman of the IBSF Materials Committee
- One copy to the team captain or official representative of the Federation to whom the sled belongs
- Two copies to the laboratory, together with the container holding the component(s) to be tested

By returning one of the two copies of the form to the IBSF Secretary General, the laboratory confirms that it has received the container undamaged.

15.3 The Container

The seized components will be sealed in a container.

15.4 Remarks

The IBSF bears the costs of the laboratory analysis. In case of positive analysis results, the IBSF can order the costs to be reimbursed by the Federation to whom the sled belongs.

PROTOCOL FOR SEIZURE OF SLED COMPONENTS FOR CONFORMITY TESTS			
Place:	Date:	Time:	Competition:
Event:		Nation:	

Description of component/s taken:	

Test/s required:	

Name of Laboratory:	

Laboratory result:	

President of Jury	Materials Commission	National Federation
Name:	Name:	Name:
Signature:	Signature:	Signature:

The Laboratory In the person of:
Acknowledges receipt of the official container bearing unbroken seals, from.
On (date) At (time)

Stamp:

Signature

16. APPENDIX 4: THE TRACK

Combined Bobsleigh, Skeleton and Luge Tracks

16.1 Scope

New combined bob, skeleton and luge tracks shall be constructed in such a way that they are suitable for the practice of bob, luge and skeleton racing with no limitations.
For the purpose of designing, constructing and using the tracks, the greatest attention shall be paid to the environment and its protection.
The directives, which track constructors must observe, shall be designed in such a way as to keep the costs of the tracks as low as possible and to guarantee satisfactory use of the installations after the Olympic Winter Games.

16.2 Environmental Protection

The environmental manual, 'IBSF and the Environment' is an integral part of these rules. It must be considered in the preparatory phase, in the design, and during operation of the track. [See Section 18 Appendix 6]

16.3 Technical Commission

The IBSF and the FIL each constitute a commission that will supervise jointly the preparatory phase of the design, the design itself, the construction and the commissioning of each track.
The IBSF and FIL Technical Commissions are at the disposal of bob, skeleton and luge track constructors and managers to provide consultancy free of charge.

16.4 Preparatory Phase of Design

The IBSF and FIL Technical Commissions shall be called upon to effect an inspection and to provide consultancy before a decision is made regarding the terrain on which the track will be constructed.
The Commissions shall present a written report on the terrains, specifying the documents to be submitted to them for further consideration.

16.5 Design in General

The IBSF and FIL Technical Commissions shall be periodically called upon during the track design phase.
The Commissions shall approve the chosen terrain and the basic project.
The same rule applies in case of changes regarding the choice of the terrain and the basic project.

16.6 Location of the Track

If possible, the track shall be located on the north side of the slope and be easily accessible via normal channels of communication. Its trajectory shall - as far as possible - follow the natural development of the terrain.
In order to guarantee optimal use of the track (after the Olympic Winter Games), it is of the utmost importance that the track be located close to a city or to a densely populated area.

16.7 Length of the Track

New Artificial combined bob, luge and skeleton tracks shall be 1200 - 1650 meters long, 1200 meters of which shall be sloping downhill. The last approx. 100 – 150 meters may consist, depending on speed, of an uphill stretch that shall have bends.
The maximum gradient of this stretch must not exceed 12%.

Speed at the finish shall be higher than 80 Km/hr.
After time keeping at the finish, the stopping stretch shall be straight and not have any further bends.

16.8 Track Characteristics

The track shall include elements of varying technical difficulty.
Particularly demanding elements in terms of driving technique shall be located in the first stretch, which accounts for two thirds of the track.
At design level, it is to be foreseen to be able to reach a speed of between 80 and 100 Km/hr after the first 250 meters.
Bends, combinations of bends and straight stretches of a suitable length shall be inserted into the track.

16.9 Starting Area: Bobsleigh and Skeleton

16.9.1 Push-Off Stretch

The push-off stretch means the part of the track between the start block (wooden board) and the first photoelectric cell.
This stretch shall be 15 meters long and have a gradient of 2%.
The rearmost part of this stretch must consist of a block (wooden board) fixed to the ground, which must not be removed, nor passed.

16.9.2 Start Block (Wooden Board)

The start block must be at least 150 cm long, 20 cm wide and 5 cm high from the surface of the ice.

16.9.3 Starting Area

After the first photoelectric cell (start- line), the track must follow a straight path so that bobsleds starting off may reach a speed of 35 Km/hr. The track must be sufficiently wide in order not to obstruct teams.
The gradient of a 60 m stretch must be equal to 12%.
The stretch between the first photoelectric station must be 50 m long (starting time).

16.9.4 Preparation

Behind the start block (wooden board), there must be a preparation area with a frozen base, of such a size that it can accommodate two bobsleds on the ice without obstructing the team about to start off.

16.9.5 Start Procedure Time Limit

If the start does not take place within 60 seconds (bobsleigh) or 30 seconds (skeleton), the light must be switched to red. When the light is switched to red, an acoustic signal must be sounded.

16.10 Luge Start

16.10.1 General Aspects

For descents in men's, women's, junior and double luge events, the track must be equipped with all the necessary starting structures for guaranteeing the normal execution of trials in all specialties.
During competitions it must be possible to delimit the starting zone.

16.10.2 Starting Zone

The following structures are part of the starting zone:

- A horizontally frozen surface which enables the athlete to assume a sitting position on the luge.
- The length of this horizontally frozen surface measured in the direction of push-off grips must be at least 2000 mm.
- The length of the horizontally frozen surface between push-off grips and the beginning of the sloping stretch is 500 mm.

16.10.3 Push-Off Grips

Two 'push-off' grips are fixed to the side of the track and they are adjustable vertically and horizontally, and can be used by the athlete to increase the initial speed.
Distance between the surface of the ice and the upper edge of the 'grips' at the same height: 230-250 mm.
Space between the two 'grips': 700 mm.
Width of 'grips' for hands: each grip at least 150 mm wide, 27 mm in diameter. Surface of the grip must be knurled in its whole width.
The 'grips' must be constructed in such a way that they cannot be distorted when subjected to traction by the athlete.
The 'grips' must be adjustable both horizontally and vertically, to ensure compliance with the above-mentioned measurements.

16.10.4 Starting Stretch

The starting zone must be sufficiently curved in both its upper and lower parts (radius of the upper part at least 2 m, radius of the lower part at least 10 m), to allow the luge to enter the track without changing its trajectory.
The distance between the start grip and the first photoelectric cell must be approx. 7 m. The distance between the first photoelectric cell and the first intermediate time-keeping station must be approx. 3 - 6 seconds (start time).
The starting ramp and the track itself must meet at an angle of no more than 8°.

16.11 Bends

The bends must be constructed in such a way as to allow sleds to move not only along a single trajectory, but to provide a band of possible trajectories from which to choose.
In the central part of the bend, the trajectory should extend along the upper half of the bend.
Entries and exits from bends must be rounded so that the sleds can take them smoothly with no risk of capsizing, if no mistake is made in driving.

16.12 Guardrails in Bends

Guardrails in bends (bumpers) must be constructed in such a way that they return the sleds on to the track.
They must be sufficiently long and wide.

16.13 Centrifugal Force

The maximum time for which centrifugal force of '4G' may occur is 3 seconds.
The maximum centrifugal force allowed is '5G'; this centrifugal force must not last for more than 2 seconds.

16.14 Straights

In the iced construction, maximum width is 140 cm. The external part of the sidewalls of the straight stretches should not be higher than 80 - 100 cm, including any raised section.
In the iced state, the inside part of the sidewalls must be at least 50 cm high.
The sidewall of straight stretches must be at a right angle to the track base.
The transition between the sidewall and the base of the track must be provided with a channel. In the iced state its radius must be 10 cm.
In transitions linking a bend to a straight, the raised part of the bend must run into the sidewall of the straight gradually in a sufficiently long section.

16.15 Deceleration Stretch

The deceleration stretch must be constructed in such a way that the bobsled, the skeleton and the luge can stop even without applying the brakes. The gradient of the deceleration stretch must not be in excess of 20%.
At the end of the iced stretch, sleds must be able to continue without any obstacle. If considered necessary, at speeds less than 30 Km/hr, special cushioning devices may be installed, in order to avoid any injury to people and to restrict damage to sleds to a minimum.
For skeleton, sufficient foam rubber mats have to be made available. If possible water-repellent (approx. 100 x 150 cm, maximal thickness 6 cm.).

16.16 Lighting

In the event lighting should be required for training and competitions, the following conditions must be complied with:

a) Uniform lighting intensity, without shadows and reflection.
b) The lighting system must be powered by two independent systems, one of which must also be independent of the mains power supply.
c) If one of the two circuits breaks down, 50% of the planned lighting capacity must be nevertheless guaranteed.

16.17 Solar and Weather Protection Devices

The stretches of the track exposed to the sun and/or to adverse weather conditions must be protected by means of proper devices.
On bends, protection may be provided by fixed roofs combined with the coverings of the bends.
On straight stretches, a removable type of covering, open on one side of the track, must be adopted. It is forbidden to install roofs with fixed coverings on straight stretches. Any pillars and fixture systems shall be at a distance of 50 cm from the inside of the track wall.
Coverings shall not interfere significantly with television filming or the view of spectators. They should possibly be of the removable type.
Local climate conditions must be duly considered.

16.18 Water Supply

A plumbing system must be installed along the track, protected from freezing and provided with a sufficient number of properly protected hydrants.
Access to the hydrants from the track must be guaranteed.

16.19 Catwalks

Catwalks must be installed along the track, along which members of the Jury, the Technical Delegate and trainers may stand. Access by spectators to these catwalks must be prevented.
The position of these catwalks is established by the Technical Commissions on approval of the project.

16.20 Infrastructures - Ancillary Facilities

The spaces for the warming up section, shelters to store bobsleds, the building at the starting zone and for weighing, must be sufficiently large.
In particular sufficiently large areas for warming up of athletes shall be foreseen in the open air.
A medical first-aid room, an anti-doping room, a room for controlling material and a press centre shall be foreseen.
Ancillary facilities may also be of a temporary type.
Their construction is established jointly by the author of the project and the Technical Commissions.

16.21 Buildings at the Start and Finish

Two buildings must be constructed at the Start, one of which must be situated near the upper starting zone, namely for bobsleigh, skeleton and single luge (men). The other shall be located near the lower starting zone for the single luge (women), double luge (men) and Juniors. There is only one building at the finish for all specialties.

16.22 Partitioning of Costs

The budget and the costs for building a combined bob and luge track are to be presented as follows:

a) Costs of the track and infrastructures resulting from the compliance with these rules and with the directives of the IBSF and FIL
b) Remaining costs, e.g. longer track, improved infrastructures, approach roads, developments, etc.

The exact partitioning is determined between the constructor and the Technical Commissions of the IBSF and the FIL.

16.23 Exceptions

Exceptions may be made in certain cases. The Vice Presidents of the FIL and the IBSF must authorize these exceptions in writing.
However, these decisions shall not affect safety, nor imply any significant reduction in sporting value and shall not interfere with television filming.

16.24 Homologation

Before IBSF competitions take place, recently the IBSF Technical Commission must homologate constructed or restructured bob, skeleton and luge tracks.
For this homologation, the IBSF assumes no responsibility for the accuracy of calculations or for the execution of works for constructing or restructuring the track. (This responsibility shall be assumed by the architect/engineer who designed the track and by the construction company).

17. APPENDIX 5: ADVERTISING GUIDELINES AND DRAWINGS

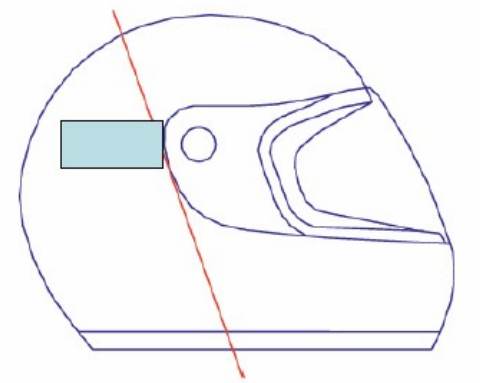

IBSF properties: helmet (bob & skeleton)
Left and right side of the helmet, as close as possible to the visor
Size: 50 cm^2

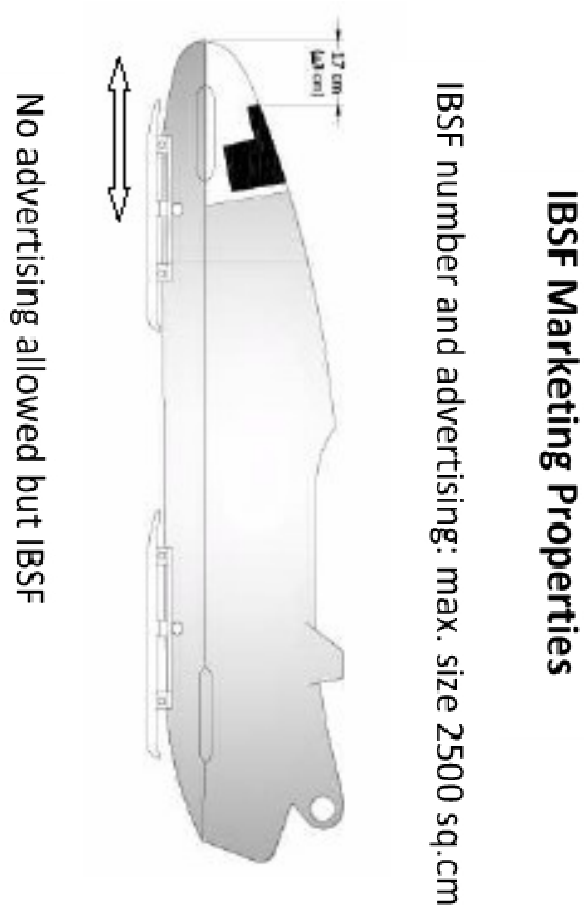

IBSF Marketing Properties

IBSF number and advertising: max. size 2500 sq.cm

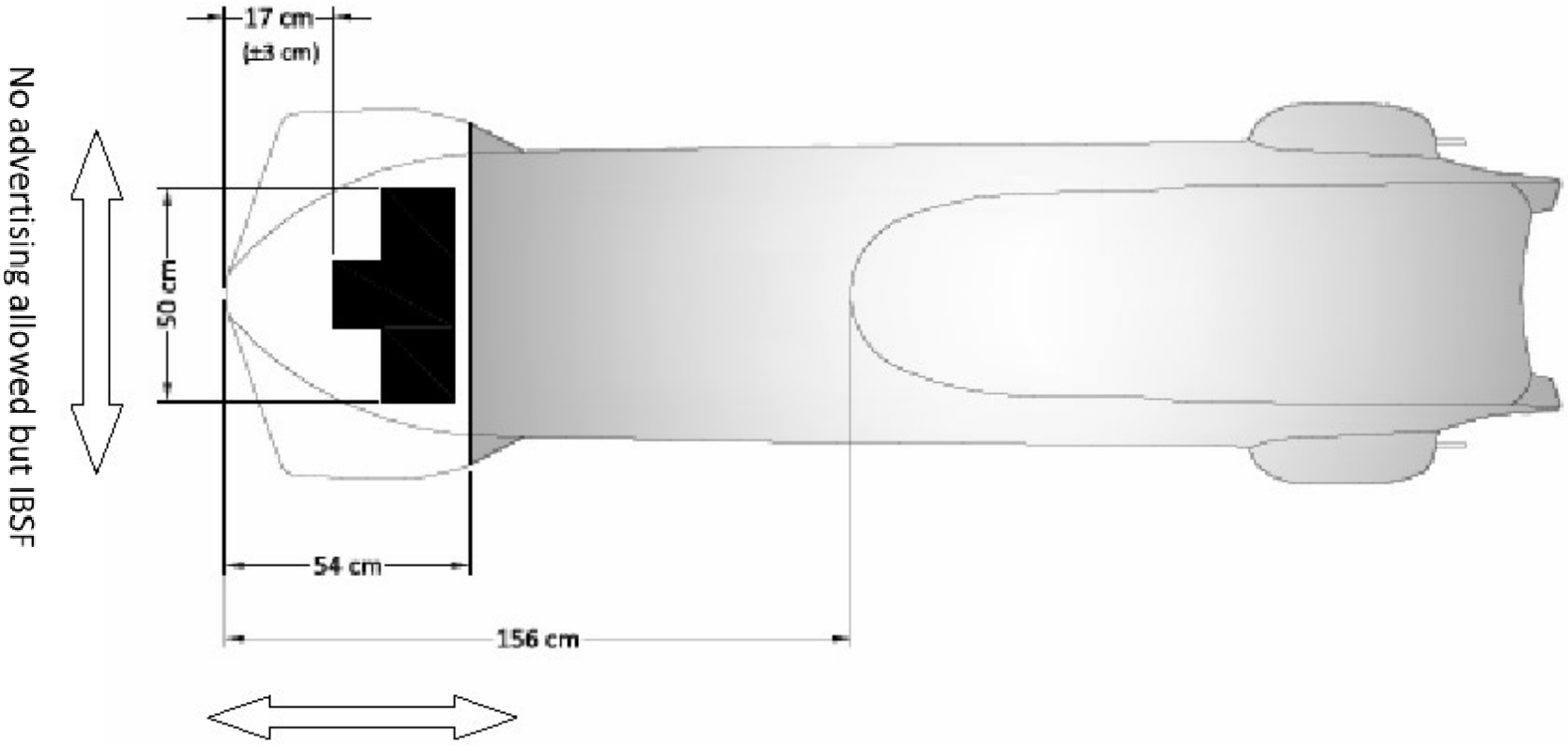

APPENDIX 6: THE IBSF and the ENVIRONMENT

17.1 Our Events

In recent years, event organisers have become more aware of the potential impact of major sporting events on the environment – in terms of pollution, ecosystems, and waste. As a result, environmental protection has become an increasingly important issue. "IBSF and the Environment" has been prepared for track managers and event organisers to host environmentally responsible sports events. Every sport and every occasion has its own characteristics and it would be impossible to cover all eventualities, but

whether the event is large or small, one-off or recurrent, it will have many basic attributes in common with others.

The IBSF through its membership of the Olympic Movement is a supporter of the IOC's Agenda 21 programme that sets out the principles and guidelines for Sport for sustainable development.

The facilities used in the exercise of our sporting disciplines can have a major impact on the environment, both the act of construction and subsequently in their operation over the lifetime of the facility. It is therefore important that all venue owners, managers and users accept that protection of the environment must remain an important element of our planning and event delivery.

17.2 Seven steps to greening your event

17.2.1 Adopt a green policy

The first step is to adopt an environmental policy, and determine what you want to achieve, set targets, and adopt measures to evaluate your success. Normally there will be at least two principal parties: the Race Organisers and the race venue. All main partners should approve the policy in order to establish a solid commitment to the programme.

17.2.2 Carry out an 'Environmental Scoping Review' of venues and operations

For each event, it is essential to establish base line information on current environmental performance, and to identify specific opportunities for 'greening' the event. Where venues are used repeatedly, the previous occasion will provide a benchmark for subsequent events.

17.2.3 Establish environmental teams

The role of the Event Director will be pivotal in implementing the environmental programme. He/she should assemble and coordinate a core team to carry this through – e.g. Site/Venue Manager, Head of Staff, Environmental Consultant and other technical specialists. Other experts or interest groups may

be included if appropriate, e.g. a representative from the local authority, or from relevant statutory agencies.

17.2.4 Define programmes and set appropriate targets

Targets need to be bold enough to be credible, but must also be attainable. It will be important to communicate the environmental policy and details of the programme to staff, suppliers, contractors, sponsors and officials, so that everyone can play their part.

17.2.5 Implement programmes

Venue-related measures will normally be in operation for as long as possible preceding the event. The event-related measures are likely to be temporary, covering the immediate build-up to, and duration of, the event.

17.2.6 Monitor implementation and adjust programme accordingly

The ability to measure and record basic environmental parameters is the first real test of performance and the effectiveness of the programme.

17.2.7 Evaluate and publicise results

The major gain from this process is raising awareness, both among the sports community and the general public. The green message can be emphasised during the lead-up, at the event itself, and as part of the post-event legacy. As far as possible it should be integrated within the normal event communications.

17.3 Action Plan

17.3.1 The impact of our sport

Climate change causes warmer winters and makes ice-making harder and more energy-intensive

From the moment an athlete begins to use equipment, apparel or facilities, there is an "ecological footprint" - an impact on the natural environment. On an even greater scale bobsleigh tracks will contribute to global and local environmental concerns. Building and managing a bobsleigh track and running an event can contribute to energy consumption, air pollution, greenhouse gas emissions and waste creation, as well as to ozone layer depletion, habitat and biodiversity loss, soil erosion and water pollution.

Bobsleigh and Skeleton tracks can affect the environment in the following ways

- Development of fragile or scarce land types [most tracks are located in vulnerable mountain areas]
- Pollution from liquid spills [refrigerant, fuels, cleaners, solvents]
- Noise and light pollution
- Consumption of non-renewable resources (fuel, metals)
- Consumption of natural resources (water, wood, paper)
- Creation of greenhouse gases by consuming electricity and fuel
- Ozone layer depletion (from refrigerants)
- Soil and water pollution from refrigerant use
- Soil erosion and compaction during construction and from spectators
- Paper consumption by media and officials

17.3.2 The Facility

Bobsled, Skeleton and Luge tracks are costly, single-purpose facilities that require considerable terrain and construction materials and which can use potentially harmful refrigerants. There are, however, ways to minimize their environmental impact.

- Design

Tracks should follow the existing terrain and be partially underground wherever possible for reasons of energy efficiency, aesthetics and reducing demand for building materials. Where feasible, the use of all-natural ice tracks should be considered.

- Coolants

Cooling systems must be carefully designed to prevent any possible leak into the atmosphere of either ammonia or synthetic coolants. Ammonia poses a health risk and synthetic coolants harm the ozone layer when leaked.

- Energy efficiency

Tracks should be kept cooled only when demand is sufficient. Screens shading the track from the sun should be used wherever a demonstrable energy savings will result.

- Impacts on the Environment

Tracks can require bulldozing of slopes and cutting of trees
Impacts of facility maintenance activities [noise, pollution, disruption of the natural environment]
Waste generated from signs, food services, banners, temporary booths, etc

17.4 Areas of action

Managing a Bobsleigh and Skeleton event involves a wide range of actions related to the concentration of infrastructures and people. Environmental measures can be included in several areas of action.

17.4.1 Location and landscaping

Location is the critical point of a facility or event. It determines not only its environmental impact but also its accessibility, proximity to users and visual impact. The choice of location can either reduce or intensify the negative influence of the facility or event. An environmentally sound site is usually financially sound as well.

The site selection occurs during the planning of new facilities or of national/international championships. Selection criteria have to be applied during the decision process.

The objectives are to:

- Minimize environmental impacts by choosing the most convenient site
- Conserve and protect special landscapes

17.4.2 Environmental elements to consider when choosing a location for sports venues are:

- Legal and physical boundaries, private holdings and public easements
- Buildings, bridges and other structures, including those of historical and archaeological significance
- Roads, paths and sidewalks
- Availability of public transport
- Electric lines, water, sewer and gas mains
- Solid waste: disposal sites, treatment plants, management and transportation
- Wastewaters: sewers, treatment plants
- Land use: residential, commercial, industrial and other applicable ordinances

17.4.3 Natural resources:

- Protected sites
- Forests
- Water resources
- Air quality

17.4.4 Natural elements:

- Climate conditions
- Local morphology

17.4.5 Perceptual elements:

- Landscapes
- Special elements
- Aesthetic values
- Cultural values

17.4.6 Detailed planning, once the site location has been selected:

- Plan the integration of the event or facility into the landscape
- Foresee protection measures
- Foresee restoration measures
- Foresee compensation measures

17.5 Sport facilities

Our tracks and associated facilities constitute the most visible part of our sports events or organisation. Their location, construction, materials and operation processes are potentially sources of high nuisance and damage. This may include land waste, landscape harm, high-energy consumption, pollution and waste of financial resources when such sports events or organisations are not adequately planned or seriously managed.

Our objectives are to:

- Avoid venues and locations with little or no post event usage
- Reduce location-related impacts (landscape, land use)
- Minimise energy consumption
- Reduce pollution

17.5.1 Planning phase

First of all, the advisability of the project has to be justified in order to avoid unnecessary and over-sized facilities.

When carrying out detailed planning, environmental criteria should be part of the decision-making process. During this phase, the project management team is responsible for establishing a detailed project aiming at detecting and minimising all foreseeable impacts. Architectural studies are realised, building materials selected and maintenance processes determined. Thinking of the environment at this stage can help you as an Organiser and event planner avoid subsequent problems.

Advisability of the project

- Real need for a new facility
- Opportunity to use or restore existing facilities
- Sizing of the facility
- Future use and needs after the event
- Use of temporary installations for support facilities when there is no future need
- Financing plan including construction, maintenance and operation costs

17.5.2 Detailed planning

- Avoid illegal building
- Include energy concerns in architectural plans, and especially thermal considerations, in order to minimize the energy required to cool or/and heat the building
- Promote environmentally sound technologies like solar energy, heat pumps
- Plan an environmentally sound operation phase
- Plan compensation and restoration measures if necessary
- Select building material as follows:
- Select materials for thermal performance
- Seek maximum recycled content and recyclable materials
- Choose durable, easily reparable or interchangeable items
- Select materials free of hazardous or toxic products
- Choose products which will not need to be disposed of as hazardous waste
- Use materials that are available in the region
- Plan an architectural integration into the landscape

17.5.3 Construction phase

During this phase, accidents and disruption can occur [accidental release of toxic substances, increased traffic, soil packing or noise]. The sound and rigorous planning of construction can protect not only the environment, but also the workers and the people living nearby.

- Build at a time of the year when animal life and humans will be least disturbed
- Install acoustic isolation if necessary
- Plan soil management
- Use appropriate engines
- Avoid where possible the use of toxic substances
- Plan the management of all substances being used in the work place (storing, use, evacuation and treatment)
- Ensure that the project is in conformity with building plans
- Use environmentally sound construction techniques and materials

17.5.4 Operational phase

The operational phase is almost always the longest in a facility's life. The facility is supplied with water, energy and other goods, the equipment is maintained and the waste removed. The facility hosts training and competition activities. It is possible to adopt a "green step" approach for all these activities.

- Prevent erosion by avoiding fragile areas and reinforcing critical passages
- Avoid wildlife habitats
- Build roads without asphalt
- Promote ecological behaviour among athletes by informing them on issues such as waste collection and protection of fauna and flora
- Saving energy with:
  - Heating, refrigeration and ventilating systems
  - Lighting systems
  - Hot water systems
  - Equipment
- Reducing risks caused by chemicals:
  - Avoid or replace dangerous chemicals
  - Store them carefully
  - Follow instructions for use and local health and safety regulations
  - Ensure that they are disposed of and treated in an environmentally sound manner
  - Ensure ecological planning and management of adjacent surfaces (avoid pesticides and chemical fertilisers, introduce several plant species, etc.)
- Reduce noise and disturbance

17.5.5 Sports equipment

The development of new technologies in sports equipment has led to the use of new substances in the manufacturing processes.

Some of those substances are potentially toxic and can be damaging during the manufacturing, use or disposal of the equipment. A point to keep in mind is the shorter life span of some equipment, which becomes obsolete before being out of order, and generates waste as a result.

The IBSF's objectives are to:

- Reduce pollution due to sports equipment
- Reuse and recycle articles where possible
- Promote environmentally sound equipment and local manufacturing knowledge

We will work closely with sponsors and suppliers to ensure that their products and services are environmentally friendly. We will achieve this by establishing a standard contracting process. Sponsors and suppliers will be encouraged to follow environmental requirements and comply with them. They have to assume their own role in the quest for environment-friendly sport. Requirements for the

manufacturers of our sports equipment and our sponsors include the provision of information on their production processes, their waste management systems, the use of reduced packaging, the reusability and non-toxicity of their products, etc.

We will also encourage companies manufacturing our sports equipment to obtain ISO 9,000 and 14,000 certificates for Quality Assurance and Environmental Management.

With regard to the issue of sports equipment, our member federations and athletes have an opportunity to act at their own level and we will encourage these parties to:

- Choose environmentally sound articles (cotton, natural fibres, etc.)
- Promote the use of locally and ecologically made products instead of imported ones which saves energy, transportation, money and contributes to promoting local knowledge and employment
- Arrange a trading market/day for equipment which is no longer suitable/no longer in use

17.5.6 Transportation

Transportation is required to get to the sports facility and much of it usually takes place in private cars. Transportation contributes to many environmental hazards, particularly air pollution (greenhouse effect, ozone formation at ground level) and related health problems. A reduction in the distances travelled with private cars, incentives to promote public transportation and non-polluting transport together with sound transportation planning could greatly minimise air pollution, noise and disturbance, in sensitive mountain environments well as the extent of land use.

The IBSF's objectives are to

- Minimize transportation
- Promote collective and or public transportation
- Encourage environmentally friendly transportation

This can be achieved by:

- Selecting specific transportation systems which minimise energy use and reduce pollution
- Encourage public transportation systems over private transportation
- Issue tickets for the event that entitle their holders to free public transit rides
- Encourage access to the tracks on foot wherever possible
- Encourage the use of collective transportation for trips to meetings and events
- Organise collective transportation where motor transport is necessary

17.5.7 Energy

Most of the energy used around the world is currently unsustainable. It is largely produced by non-renewable sources such as fossil fuels, which cause a great deal of pollution and are the biggest contributor to global warming and localised air pollution. Many forms of energy production, like nuclear plants or fossil fuel burning, involve some degree of risk to human health or to the environment.

In sports events, energy is required to produce goods that are consumed, to run the event and related facilities, and to transport people and products to the event. As in other human activities, the energy used is mainly produced with non-renewable resources.

The IBSF's objectives are to:

- Reduce energy consumption
- Promote renewable energy and new technologies
- Promote equipment and facilities with smaller energy demand

This can be achieved by:

- Promoting awareness through education at all levels
- Being energy-wise; not only at the facility level but also by such action as switching off electrical appliances when they are not in use
- Checking the lights; and keeping facility lighting to a minimum
- Insulate tracks, buildings and support facilities in order to keep them cool or warm, as the case may be

- Explore alternatives energy sources, try to use solar energy to heat water, provide electricity, or both; if available, use small hydraulic plants
- Promote energy conservation measures, select equipment and materials accordingly
- Hold meetings with local energy supply companies to get tips on further energy saving measures

17.5.8 Accommodation and catering

Our events, whether championships or local competitions, attract a large number of persons, i.e. athletes, coaches, organisers, journalists, staff members, sponsors, spectators, who require catering and accommodation for several days.

The IBSF's objectives are to:

- Minimise waste
- Avoid useless construction

This can be achieved by:

- Respecting sanitary conditions
- Reducing packaging
- Recycling goods used
- Using existing facilities (to cook and wash)
- Replacing disposable dishes with reusable ones where possible
- Building temporary facilities and hotels if there is no guaranteed need for them after the event

17.5.9 Water management and sanitation

Freshwater resources are finite and exist in a closed system. Water supply depends on full rivers, lakes, and accessible aquifers and the need for drinking water and irrigation and, increasingly, the need of power for our industries. In most parts of the world, freshwater resources are being subjected to intense pressure. Industrial wastes, sewage and agricultural runoff overload rivers and lakes with chemicals, wastes and nutrients, poisoning water supplies as a result. When practising our sports water is needed to satisfy track building, track maintenance, drinking, washing and maintenance needs. Water is part of our sports facilities.

The IBSF's objectives are to:

- Satisfy the needs generated by the sports event without endangering the water supply of the region
- Protect water resources
- Treat wastewater

This can be achieved by:

- Ensuring that the water provided to the track is of good quality; if not, take measures to purify it:
  - Filter your water
  - Boil the water for at least five minutes
  - Use iodine (two drops per litre) or tablets; only use chlorine if absolutely necessary
- Using water efficiently; turning off the tap when you are not using water is the simplest and most effective way to save water, whether washing your hands, brushing your teeth or shaving; turn on the water only when needed.
- Reducing the use of water required to maintain the track, e.g. the watering water
- Encouraging sound sustainable water resource management programmes including:
  - Water conservation and recycling practices
  - Recycling of treated storm water and sewage effluents
  - Landscape design that decreases water requirements
  - Building and infrastructure design to collect wastewater for recycling
- Waste water management:
  - Ensure the treatment of all wastewater
  - Verify the quality of treated wastewater

- If no wastewater treatment plant is available in your region, build your own sanitary system (possible at limited costs)
- Reuse treated water for field irrigation, bathrooms services, etc.

- Watch out for toxins that may remain in your facility

17.5.10 Waste management

Our facilities and events can generate considerable waste, some of which cause little more than dirt or minor disturbances, while others have a harmful and lasting effect on the environment and human health. Waste is unavoidable, but sound management ensures that waste quantities are kept to a strict minimum.

The IBSF's objectives are to:

- Minimise waste to be disposed of and treated
- Minimise pollution due to waste

This can be achieved by:

- Reducing the amount of materials handled
- Avoiding useless packaging through discussions with your suppliers
- Using as few disposable products as possible at your events
- Choosing carefully the goods and materials handled, in particular:
  - Avoid goods containing toxic substances
  - Choose reusable or recyclable goods
  - Choose goods whose waste can be appropriately treated in the treatment plants located in your region
- Implementing sorting at source (sufficient and separate rubbish bins)
- Dispatching the materials to recycling markets
- Separating hazardous waste from domestic waste
- Treating all waste properly
- Implementing a waste management programme if necessary

17.6 Large-scale Sports Events: Specific Recommendations

Large-scale sports events attract high numbers of people and necessitate the handling of large quantities of goods. This concentration of people in time and place represents a potential danger for the environment. Some measures have to be taken in order to limit the impact.

17.6.1 Sports facilities

- Use provisional installations for the facilities not needed in the long term such as spectator stands and bleachers; encourage improvement of existing facilities
- Use provisional and module equipment which is easy to transform and reuse
- Guarantee to restore provisional facilities and encourage the restoration of damaged sites

17.6.2 Transportation and air quality

- Implement transport strategies to ensure the efficient movement of people (athletes, equipment, coaches, journalists, officials and spectators)
- Establish a transportation concept promoting transport on foot and public transportation
- Establish an air quality plan for the area
  - Monitor emissions
- Encourage major air polluters, including public utilities to take permanent steps to
  - Reduce their emissions prior to the event
  - Establish energy management strategies
  - Encourage transportation fleet operators to take steps to reduce emissions
  - Work with municipal officials to reduce traffic

17.6.3 Energy

Establish an energy management programme for the area taking into account the transportation system and track facilities

17.6.4 Waste management

- Host tracks have the capacity to adopt waste disposal procedures throughout the area in accordance with the event, using techniques that may in turn be applicable to future arrangements; it is advisable to:
  - Reduce the amount of materials handled
  - Establish environmental requirements for the event's suppliers and donors
  - Separate recyclable materials at the source by the waste generator,
- And separate collection
  - Separate household and manufacturing waste at the source
  - Dispatch materials to recycling markets
  - Deal with all waste in a safe and cost-effective manner
  - Implement a comprehensive strategy for materials and waste management
  - Emphasize communication with education
  - Choose products according to cost/performance over their entire life-span

17.6.5 Environmental message to the public

- Internal environmental awareness: all the members of the organisation, senior managers and volunteers alike, should be informed of the broader rationale for their duties.
- External environmental awareness: people of the region must understand the environmental policies and objectives that are being established. Education and communication are essential to the success of sustainable development.

17.6.6 Finances

Include environmental costs in the budget from the outset

THE INTERNATIONAL SKI COMPETITION RULES (ICR)

BOOK II
CROSS-COUNTRY

APPROVED BY THE 48TH INTERNATIONAL SKI CONGRESS, KANGWONLAND (KOR)

INCL. MARKED UP CHANGES AND PRECISIONS 2013

WEB EDITION OCTOBER 2013

FÉDÉRATION INTERNATIONALE DE SKI
INTERNATIONAL SKI FEDERATION
INTERNATIONALER SKI VERBAND

INTERNATIONAL SKI FEDERATION
FEDERATION INTERNATIONALE DE SKI
INTERNATIONALER SKI VERBAND

Blochstrasse 2; CH- 3653 Oberhofen / Thunersee; Switzerland

Telephone: +41 (33) 244 61 61
Fax: +41 (33) 244 61 71
Website: www.fis-ski.com

All rights reserved.
© Copyright: International Ski Federation FIS, Oberhofen, Switzerland, 2013.

Printed in Switzerland

Oberhofen, October 2013

Table of Contents

1st Section

Table of Contents 1

200 Joint Regulations for all Competitions 3
201 Classification and Types of Competitions 3
202 FIS Calendar 5
203 Licence to participate in FIS Races (FIS Licence) 6
204 Qualification of Competitors 8
205 Competitors Obligations and Rights 9
206 Sponsorships and Advertising 10
207 Advertising and Commercial Markings 11
208 Exploitation of Electronic Media Rights 12
209 Film Rights 16

210 Organisation of Competition 16
211 The Organisation 16
212 Insurance 16
213 Programme 17
214 Announcements 17
215 Entries 18
216 Team Captains' Meetings 18
217 Draw 18
218 Publication of Results 19
219 Prizes 20

220 Team Officials, Coaches, Service Personnel, Suppliers and Firms' Representatives 21
221 Medical Services, Examinations and Doping 21
222 Competition Equipment 22
223 Sanctions 23
224 Procedural Guidelines 25
225 Appeals Commission 27
226 Violation of Sanctions 28

300 Cross-Country Competitions 29

A. Organisation 29
301 The Organising Committee (OC) 29
302 The Competition Officials 29
303 The Jury and its Duties 31
305 Team Captains' Meeting 35

B. The Cross-Country Competitions 36
310 Competition Formats and Programmes 36
311 Cross-Country Competition Courses 39
313 Official Entries for the Organiser 44
314 Starting Order 46
315 Start Procedures 48
316 Timing 50
317 Results 51

C. Competition Formats 52
321 Interval Start Competitions 52
322 Mass Start Competitions 53
323 Skiathlon 54
324 Pursuit 55
325 Individual Sprint Competitions 56
326 Team Sprint Competitions 61
327 Relay Competitions 63

D. The Competition and the Competitors 65
341 Requirements of the Competitors 65
342 Medical Examinations 66
343 Responsibilities of the competitors 66
344 Responsibilities of Officials and Others 68

E. Not Permitted to Start, Sanctions 69
351 Not Permitted to Start 69
352 Sanctions 69

F. Protests and Appeals 72
361 Protests 72
362 Right of Appeal 73

G. Popular Cross-Country Competitions 74
380 Definition of Popular Cross-Country Competitions 75
381 Entries and Competitors 75
382 Information 76
383 Jury 77
384 The Course 77
385 Control 79
386 Medical and Safety 79
387 Cold Weather Precautions 80
388 Cancellation Procedure 81
389 International Ski Competition Rules 81

H. Rollerski Competitions 81
396 Rollerski Competitions 82

1st Section

200 Joint Regulations for all Competitions

200.1 All events in the FIS Calendar must be held under the applicable FIS Rules[1].

200.2 Organisation and Conduct

Rules and instructions for the organisation and conduct of the various competitions are to be found in their respective rules.

200.3 Participation

Competitions listed in the FIS Calendar are only open to all properly licensed competitors entered by their National Ski Associations in accordance with current quotas.

200.4 Special Regulations

The FIS Council can authorise a National Ski Association to adopt rules and regulations to organise national or international competitions with different grounds for qualification but only provided that they do not go beyond the limits laid down in the present rules.

200.5 Control

All competitions listed in the FIS Calendar must be supervised by a Technical Delegate of the FIS.

200.6 Every legal sanction imposed and published in respect of a competitor, official or trainer will be recognised by the FIS and the National Ski Associations respectively.

201 Classification and Types of Competitions

201.1 Competitions with Special Rules and/or Limited Participation

National Ski Associations affiliated with the FIS - or clubs belonging to these National Ski Associations with the approval of their association - may invite neighbouring National Ski Associations or their clubs to their own competitions. But these competitions must not be promulgated or announced as international competitions, and the limitation must be made clear in the announcement.

201.1.1 Competitions with special rules and/or limited participation or including non-members may be held under special competition rules as approved by the FIS Council. Any such rules must be published in the announcement.

201.2 Competitions with Non-Members of the FIS

The FIS Council can authorise one of its member National Ski Associations to invite a non-member organisation (military etc.) to competitions, or accept invitations from such an organisation.

201.3 Classification of Competitions

201.3.1 Olympic Winter Games, FIS World Ski Championships and FIS World Junior Ski Championships

[1] Throughout the ICR, the use of the masculine he/his, etc also includes the feminine she/her, etc

201.3.2 FIS World Cups

201.3.3 FIS Continental Cups

201.3.4 International FIS Competitions (FIS Races)

201.3.5 Competitions with Special Participation and/or Qualifications

201.3.6 Competitions with Non-Members of the FIS

201.4 FIS Disciplines

A discipline is a branch of a sport and may comprise one or several events. For example Cross-Country Skiing is a FIS Discipline, whereas the Cross-Country Sprint is an Event.

201.4.1 Recognition of Disciplines in the International Ski Federation

New disciplines, comprising one or several events, widely practised in at least twenty-five countries and on three continents may be included as part of the programme of the International Ski Federation.

201.4.2 Exclusion of Disciplines from the International Ski Federation

If a discipline is no longer practised in at least twelve National Ski Associations on at least two continents the FIS Congress may decide to exclude the discipline from the programme of the International Ski Federation.

201.5 FIS Events

An event is a competition in a sport or in one of its disciplines. It results in a ranking and gives rise to the award of medals and/or diplomas.

201.6 Types of Competitions

International competitions consist of:

201.6.1 Nordic Events

Cross-Country, Rollerskiing, Ski Jumping, Ski Flying, Nordic Combined, Team Competitions in Nordic Combined, Nordic Combined with Rollerskiing or In-line, Team Ski Jumping, Ski Jumping on plastic jumping hills, Popular Cross-Country races

201.6.2 Alpine Events

Downhill, Slalom, Giant Slalom, Super-G, Parallel Competitions, Combined, KO, Team Competitions

201.6.3 Freestyle Events

Moguls, Dual Moguls, Aerials, Ski Cross, Half Pipe, Slopestyle, Team Competitions

201.6.4 Snowboard Events

Slalom, Parallel Slalom, Giant Slalom, Parallel Giant Slalom, Super-G, Half Pipe, Snowboard Cross, Big Air, Slopestyle, Team Competitions

201.6.5 *Telemark Events*

201.6.6 *Firngleiten*

201.6.7 *Speed Skiing Events*
Speed 1 (S1), Speed Downhill (SDH), Speed Downhill Junior (SDH Jun)

201.6.8 *Grass Ski Events*

201.6.9 *Combined Events with other Sports*

201.6.10 *Children's, Masters, Disabled Events, etc.*

201.7 FIS World Championship Programme

201.7.1 To be included in the programme of the FIS World Championships, events must have a recognised international standing both numerically and geographically, and have been included for at least two seasons in the World Cup before a decision about their admission can be considered.

201.7.2 Events are admitted no later than three years before specific FIS World Championships.

201.7.3 A single event cannot simultaneously give rise to both an individual and a team ranking.

201.7.4 Medals may only be awarded at the FIS World Championships and FIS Junior World Championships in all disciplines (Alpine, Nordic, Snowboard, Freestyle, Grass Skiing, Rollerski, Telemark, Speed Skiing) when there are a minimum of 8 nations participating in team competitions and 8 nations represented in an individual event.

202 FIS Calendar

202.1 Candidature and Announcement

202.1.1 Each National Ski Association is entitled to present its candidature for the organising of the FIS World Ski Championships in accordance with the published "Rules for the Organisation of World Championships"

202.1.2 For all other competitions, the registrations for inclusion in the International Ski Calendar have to be made to FIS by the National Ski Association according to the Rules for the FIS Calendar Conference published by the FIS.

202.1.2.1 The applications of the National Ski Associations (NSA) have to be sent to FIS using the FIS Calendar program (ftp://ftp.fisski.ch/Software/Programs/) by 31st August (31st May for the Southern Hemisphere).

202.1.2.2 *Allocation of competitions*
Allocation of the competitions to the National Ski Associations is made through the electronic communication process between FIS and the National Ski Associations. In the case of FIS World Cup competitions, the calendars are subject to the approval of the Council, on proposal of the respective Technical Committee.

202.1.2.3 *Homologations*

Competitions that appear in the FIS Calendar may only take place on competition courses or jumping hills homologated by the FIS.
The homologation certificate number must be indicated when applying for the inclusion of competition in the FIS Calendar.

202.1.2.4 *Publication of the FIS Calendar*

The FIS calendar is published by FIS on the FIS website www.fis-ski.com. It will be updated to reflect cancellations, postponements and other changes continuously by FIS.

202.1.2.5 *Postponements*

In case of the postponement of a competition listed in the FIS Calendar, the FIS has to be informed immediately and a new invitation must be sent to the National Ski Associations, otherwise the competition cannot be considered for FIS Points.

202.1.2.6 *Calendar Fees*

In addition to the annual subscription, a calendar fee is set by the FIS Congress and is due for each year and for each event listed in the FIS Calendar. For additional events, a 50% surcharge will be made in addition to the regular calendar fee for applications submitted 30 days before the date of the competition. The calendar fee for a competition that has to be rescheduled remains the responsibility for payment in full of the original organising National Ski Association.

At the beginning of the season, each NSA will receive an invoice for 70 % of its total invoice from the previous season. This amount will be debited from its FIS account. At the end of the season each NSA will receive a detailed invoice for all registered competitions during the season. The balance will be subsequently be debited or credited to the NSA account at FIS.

202.1.3 *Appointment of Race Organiser*

In the event that the National Ski Association appoints a race organiser, such as an affiliated ski club, it shall do so using the form “Registration Form National Ski Association and Organiser” or by means of a similar written agreement. An application by a National Ski Association for inclusion of an event on the International Ski Calendar shall mean that the necessary agreement to organise the event has been established.

202.2 Organisation of Races in other Countries

Competitions which are organised by other National Ski Associations may only be included in the FIS Calendar when the National Ski Association of the country concerned where the competitions will be organised gives its approval.

203 Licence to participate in FIS Races (FIS Licence)

A licence to participate in FIS races is issued by a National Ski Association to competitors who fulfil the criteria for participation through registering the competitor with FIS in the respective discipline(s).

203.1 The FIS licence year begins on July 1st and finishes on June 30th of the following year.

203.2 To be eligible for participation in FIS events, a competitor must have a licence issued by his National Ski Association. Such a licence shall be valid in the Northern and Southern hemispheres for the licence year only. The validity of a licence can be limited to participation in one specific country or in one or more specific events.

203.2.1 The National Ski Association must guarantee that all competitors registered with a FIS License to participate in FIS races accept the Rules of the International Ski Federation, in particular the provision which foresees the exclusive competence of the Court of Arbitration for Sport as the court of appeal in doping cases.

203.3 A National Ski Association may only issue a FIS licence to participate in FIS races when the competitor has proven his nationality and therefore eligibility by submitting a copy of his passport and signed the Athletes Declaration in the form approved by the FIS Council and returned it to his National Ski Association. All forms from under-age applicants must be counter signed by their legal guardians. Both the copy of the passport and signed Athletes Declaration must be made available to FIS on request.

203.4 During the FIS licence year, a competitor may only participate in International FIS competitions with a FIS licence to participate in FIS races issued by one National Ski Association.

203.5 Application for a change of FIS Licence Registration

All applications to change licence registration from one member National Ski Association to another are subject to consideration by the FIS Council at its Meetings in the spring. In principle an application to change licence registration will not be granted unless the competitor demonstrates his personal association with the new nation.

Prior to submitting an application to change licence registration a competitor must possess the citizenship and passport of the country for which he wishes to compete. In addition, the competitor must have had his principal legal and effective place of residence in the new country for a minimum of two (2) years immediately prior to the date of the request to change registration to the new country/National Ski Association. An exception to the two year residency rule may be waived if the competitor was born in the territory of the new country, or whose mother or father is a national of the new country. Applications will not be accepted if a parent has obtained a passport for the new country, but is not resident, and/or there is no family ancestry.

Furthermore the competitor is required to submit a detailed explanation with the application about his personal circumstances and the reason for requesting a change of licence registration.

203.5.1 If a competitor has already participated in FIS calendar events for a National Ski Association, he must have the written agreement to be released from the former National Ski Association in addition to the citizenship, passport and residency requirements in art. 203.5 before the new National Ski Association may submit a request to FIS for a change of registration.

If such a written agreement is not given, the competitor may not participate in any FIS calendar events for a period of twelve months from the end of the last season in which he competed for his present National Ski Association, nor may he be issued with a licence to participate in FIS races by the new National Ski Association.
These rules are also valid when a competitor has more than one nationality and would like to change National Ski Association licence registration.

203.5.2 The FIS Council reserves the right in its absolute discretion, to grant or to decline to grant, a change of licence notwithstanding the fulfilment of the aforementioned conditions where it deems it is contrary to the spirit of the rule and in the best interests of the International Ski Federation to do so (e.g. to decline to grant a change of licence if a member National Ski Association tries to “import” a competitor).

203.5.3 In the event that a competitor does not fulfil all the criteria required to apply for a change of National Ski Association licence registration, the onus shall be on the competitor to demonstrate in writing to the satisfaction of the FIS Council that exceptional circumstances exist and it is in the best interests of the International Ski Federation to grant the change.

203.5.4 A competitor will retain his FIS Points if he changes his National Ski Association under the condition that the former National Ski Association granted the release of the competitor.

203.5.5 In the event that any of the documents for an application to change licence registration submitted by the National Ski Association (letter of release from the former National Ski Association, passport, residency papers) are found to be false, the FIS Council will sanction the competitor and the new National Ski Association.

204 Qualification of Competitors

204.1 A National Ski Association shall not support or recognise within its structure, nor shall it issue a licence to participate in FIS or national races to any competitor who:

204.1.1 has conducted himself in an improper or unsportsmanlike manner or has not respected the FIS medical code or anti-doping rules,

204.1.2 accepts or has accepted, directly or indirectly, any money-payments for the participation at competitions,

204.1.3 accepts or has accepted a prize of a higher value than fixed by article 219,

204.1.4 permits or has permitted his name, title or individual picture to be used for advertising, except when the National Ski Association concerned, or its pool for this purpose, is party to the contract for sponsorship, equipment or advertisements.

204.1.5 knowingly competes or has competed against any skier not eligible according to the FIS Rules, except if:

204.1.5.1 the competition is approved by the FIS Council, is directly controlled by the FIS or by a National Ski Association, and the competition is announced "open",

204.1.6 has not signed the Athletes Declaration,

204.1.7 is under suspension.

204.2 With the issuance of a licence to participate in FIS competitions and entry the National Ski Association confirms, that valid and sufficient accident insurance for training and competition is in place for the competitor and assumes full responsibility.

205 Competitors Obligations and Rights

205.1 The competitors are obliged to make themselves familiar with the appropriate FIS Rules and must comply with the additional instructions of the Jury. Competitors must also follow the FIS rules regulations.

205.2 Competitors are not permitted to use doping. (see FIS Anti-Doping Rules and Procedural Guidelines).

205.3 As stated in the Athletes Declaration, competitors have the right to inform the Jury of safety concerns they may have regarding the training and competition courses. More details are given in the corresponding discipline rules.

205.4 Competitors who do not attend the prize-giving ceremonies without excuse lose their claim to any prize including prize money.
In exceptional circumstances, the competitor may be represented by another member of his team, but this person has no right to take his place on the podium.

205.5 Competitors must behave in a correct and sportsmanlike manner towards members of the Organising Committee, volunteers, officials and the public.

205.6 Support for the Competitors

205.6.1 A competitor is registered with FIS by his National Ski Association to participate in FIS races may accept:

205.6.2 full compensation for travel cost to training and competition,

205.6.3 full reimbursement for accommodation during training and competitions,

205.6.4 pocket money,

205.6.5 compensation for loss of income according to decisions of his National Ski Association,

205.6.6 social security including insurance for training and competition,

205.6.7 scholarships.

205.7 A National Ski Association may reserve funds to secure a competitor's education and future career after retiring from active competitive skiing.

The competitor has no claim to these funds which shall be dispensed only according to the judgement of his National Ski Association.

205.8 Gambling on Competitions

Competitors, trainers, team officials and technical officials are prohibited from betting on the outcome of competitions in which they are involved. Reference is made to the FIS Betting and other Anti-Corruption Violations Rules, July 2013.

206 Sponsorships and Advertising

206.1 A National Ski Association or its pool may enter into contracts with a commercial firm or organisation for financial sponsorship and or the supply of goods or equipment if the specific company or organisation is acknowledged as an Official Supplier or Sponsor by the National Ski Association.
Advertising using photographs, likeness or names of FIS competitors with any sportsman not eligible according to either the FIS eligibility rules or the eligibility rules of the IOC, is forbidden.
Advertising with or on competitors with tobacco or alcohol products or drugs (narcotics) is forbidden.

206.2 All compensation under such contracts must be made to the National Ski Association or its ski pool which shall receive the compensation subject to the regulations of each National Ski Association.
Competitors may not directly receive any part of such compensation except as stated in art. 205.6. The FIS may at any time call for a copy of the contract.

206.3 Equipment goods supplied to and used by the national team must, with reference to markings and trademarks, conform with the specifications stated in art. 207.

206.4 Competition Equipment at FIS Events

Only the competition equipment, according to the FIS rules on advertising, provided by the National Ski Association, complete with the commercial markings approved by the National Ski Association, may be worn in FIS World Cup and FIS World Ski Championship competitions. Obscene names and/or symbols on clothing and equipment are forbidden.

206.5 Competitors are not permitted to take off one or both skis or snowboard before crossing the red line in the finish area, as defined by the organiser.

206.6 At FIS World Ski Championships, FIS World Cups and all events of the FIS Calendar, a competitor is not allowed to take equipment (skis/board, poles, ski boots, helmet, glasses) to the official ceremonies which have anthems and/or flag raising. Holding/carrying equipment on the victory podium after conclusion of the whole ceremony (handing over trophies and medals, national anthems) for press photos, pictures, etc. is however permitted.

206.7 Winners presentation / Equipment on the podium

At FIS World Ski Championships and all events of the FIS Calendar, a competitor is allowed to take the following equipment on the podium:

- Skis / Snowboards
- Footwear: The athletes may wear their boots on their feet, but are not allowed to wear them anywhere else (such as around their neck). Other shoes cannot be taken on the podium during presentation except if they are worn on the feet.
- Poles: not on/around skis, normally in the other hand
- Goggles: either worn or around the neck
- Helmet: if worn only on the head and not on another piece of equipment, e.g. skis or poles
- Ski straps: maximum of two with name of the producer of skis; eventually one can be used for a wax company
- Nordic Combined and Cross-Country Ski Poles Clips. A clip can be used to hold the two poles together. The clip can be the width of the two poles, though not wider than 4 cm. The length (height) can be 10 cm. The long side of the clip is to be parallel to the poles. The commercial marking of the pole manufacturer can cover the entire surface of the clip.
- All other accessories are prohibited: waist bags with belt, phones on neckbands, bottles, rucksack/backpack, etc.

206.8 An unofficial presentation (flower ceremony) of the winner, and the winners ceremony immediately after the event in the event area with the national anthem even before the protest time has expired, is allowed at the organiser's own risk. Visible wearing of the starting bibs is mandatory.

206.9 Visible wearing of the starting bib of the event or other outerwear of the NSA is mandatory in the restricted corridor (including the leader board and TV interview locations).

207 Advertising and Commercial Markings

Technical Specifications about the size, the form and the number of commercial markings are decided by the FIS Council each spring for the following competition season and published by the FIS.

207.1 The rules covering advertising on equipment must be followed.

207.2 Any competitor who breaches the advertising rules is subject to sanction, as provided for in art. 223.1.1. An offence for which a sanction may apply and a penalty be imposed is defined as conduct that is in violation or non-observance of competition rules.

207.3 If a National Ski Association fails to enforce these rules or for any reason prefers to refer the case to the FIS, the FIS may take immediate steps to suspend a competitor's licence. The competitor concerned and/or his National Ski Association have the right to make an appeal before a final decision is taken.

207.4 If an advertiser uses the name, title or individual picture of a competitor in connection with any advertisement, recommendation or sale of goods without the approval or knowledge of the competitor, the competitor may give a "power of attorney" to his National Ski Association or to the FIS to enable them, if necessary, to take legal action against the company in question. If the competitor concerned fails to do so, the FIS shall judge the situation as if the competitor had given permission to the company.

207.5 The FIS Council shall review if and how far infractions or breaches of rules have taken place in regard to qualification of competitors, sponsorship and advertising and support for the competitors.

207.6 In all competitions of the FIS Calendar (especially for the FIS World Cups) the "FIS Advertising Guidelines" must be observed in regard to advertising possibilities in the competition area, respectively in the TV area.
These "FIS Advertising Guidelines", approved by the FIS Council, are an integral part of the FIS contracts with cup organisers.

208 Exploitation of Electronic Media Rights

208.1 General Principles

208.1.1 *Olympic Winter Games and FIS World Championships*
All Media rights to the Olympic Winter Games and FIS World Championships belong to the IOC and to the FIS respectively, and are subject to separate contractual arrangements.

208.1.2 *Rights owned by the member National Ski Associations*
Each FIS affiliated National Ski Association that organises events in its country which are included in the annual FIS calendars, has the authority as the owner of the electronic media rights to enter into contracts for the sale of the electronic media rights on those events. In cases where a National Ski Association organises events outside its own country, these rules also apply, subject to bi-lateral agreement with the National Ski Association of the country where the event takes place.

208.1.3 *Promotion*
Contracts shall be prepared in consultation with the FIS with the intention of giving the widest promotion and exposure to the sports of skiing and snowboarding and considering the best interests of the National Ski Associations.

208.1.4 *Access to events*
For all competitions, admission of personnel and their equipment to the media areas will be limited to those having the necessary accreditation and access passes. Priority access will be given to rights holders and the system of accreditation and access control must avoid possible abuse by non-rights holders.

208.1.5 *Control by the FIS Council*
The FIS Council exercises control over the adherence to the principles of this Rule by National Ski Associations and all organisers. Should a contract or individual clauses thereof, create a major conflict of interest for the FIS, a member National Ski Association or its organiser, then this will be evaluated by the FIS Council. Full information will be provided so that the appropriate solution can be found.

208.2 **Definitions**

In the context of this rule the following definitions will apply:

"Electronic Media Rights" means the rights for Television, Radio, Internet and Mobile devices.

"Television rights" means the distribution of television images, both analogue and digital, comprising video and sound, by means of terrestrial transmitters, satellite, cable, fibre or wire for public and private viewing on television screens. Pay-per-view, subscription, interactive TV, video on demand services, IPTV or similar technologies, are also included in this definition.

"Radio rights" means the distribution and reception of radio programmes, both analogue and digital, over the air, by wire or via cable to devices, both fixed and portable.

"Internet" means access to images and sound through interconnected computer networks.

"Mobile and portable devices" means the provision of images and sound through a telephone operator and receivable on mobile telephone or other non fixed devices, such as Personal Digital Assistants.

208.3 **Television**

208.3.1 *Standard of production and promotion of competitions*

In the agreements concerning production with a TV organisation or agency acting as host broadcaster, the quality of TV transmissions for ski and snowboard events published in the FIS Calendar – especially for FIS World Cup competitions – must be considered. Of particular importance, while taking into consideration applicable national laws and rules affecting broadcasting, are:

a) Top quality and optimal production of a TV signal (for live or deferred transmission depending on the event) in which sport is the centrepiece;

b) Adequate consideration and appearance of venue advertising and event sponsors;

c) A standard of production in conformity with the FIS TV Production Guidelines and appropriate to current market conditions for the discipline and to the level of the FIS competition series. This means live coverage of the entire event including the winner presentation for live transmission (unless circumstances determine that a live production is not provided). This coverage shall be produced in a neutral way, shall not concentrate on any athlete or nation and shall show all competitors

d) The live international signal of the host broadcaster must include appropriate graphics in English, particularly the official FIS logo, timing and data information and results, and international sound.

e) Where it is appropriate to the individual TV market, there should be live TV transmission in the country where the event takes place and in other countries with a high interest.

208.3.2 *Production and Technical costs*

Except when otherwise agreed between the National Ski Association and the agency/company managing the rights, the cost of producing the television signal for the exploitation of the different rights will be borne by the broadcaster having acquired the rights in the country where the competition takes place or a production company mandated to produce the signal by the company owning the rights. In certain cases, the organiser or the National Ski Association may assume these costs.

For each of the different rights granted under this rule the technical expenses that are to be paid for by those organisations that have acquired the rights and which are seeking to access the television signal (original picture and sound without commentary), have to be agreed between the producing company or the agency/company managing the rights, as applicable. This also applies to any other production costs that may be requested.

208.3.3 *Short extracts*

Short extracts granting news access for non-rights holders are to be provided to television companies according to the following rules. It is noted that in a number of countries national legislation governs the showing of short extracts in news programmes.

These extracts may only be used in regularly scheduled news programmes and cannot be kept for archive purposes

a) In those countries where legislation exists regarding news access to sporting events then this legislation will always hold precedence for reporting on FIS events.

b) In those countries where no legislation exists regarding news access by competing networks and provided that agreements between the company managing the rights and the primary rights holder take precedence then short extracts of a maximum of 90 seconds news access will be granted to competing networks by the agency/company managing the rights for transmission four hours after the rights holding network has shown the competition. The use of this material will cease 48 hours after the end of the competition. If the rights holding network delays its transmissions by more than 72 hours from the end of the competition, then competing networks can show extracts of a maximum of 45 seconds commencing 48 hours after and ending 72 hours after the event itself. Any request to exploit short extracts shall be addressed to the agency/company managing the rights which shall grant to the broadcasters access to the short extracts subject to agreement regarding the technical costs incurred to receive the material.

c) In those countries where no transmission rights have been purchased by a television company, all television organisations will be able to transmit short extracts of 45 seconds as soon as the material is available, subject to agreement with the agency/company managing the rights regarding the technical costs to be incurred to receive the material. Permission for the use of this material will expire after 48 hours.

d) Short extracts will be produced by the host broadcaster or the agency/ company managing the rights and distributed by that agency/company, taking into consideration 208.3.2 above.

208.4 Radio

The promotion of FIS events through radio programmes will be encouraged by making available accreditation to the principle radio station(s) in each interested country. Access to the venue will be granted solely to those radio organisations that have obtained the necessary contractual authorisation from the rights holder, and will be only for the production of radio (audio) programmes. If accepted by national practice and the authorisation is granted, these programmes can also be distributed on the internet site of the radio station.

208.5 Internet

Unless the contract for the sale of the Electronic Media Rights on FIS events states otherwise, each television rights holder that also acquires the internet rights, will ensure that video streams from its website other than short extracts are geoblocked against access from outside its own territory. Regularly scheduled news bulletins containing material of FIS events may be streamed on the rights holding broadcaster's website, provided no changes are made to the bulletin as transmitted in the original programme.

Video and audio material produced in public areas where accreditation, tickets or other permissions are not required to gain access must not contain race footage. It is recognised that new technology provides members of the public with the possibility to produce unauthorised video recordings that may be posted on websites. Appropriate information advising that the unauthorised production and use of video material is prohibited and that legal proceedings could be taken, will be shown at all entrances and printed on entrance tickets.

All National Ski Associations and the rights holders/agencies will give permission for short extracts to be placed on the FIS website for non-commercial use subject to the following conditions:

a) When short extracts have not been acquired for Internet distribution the maximum duration of the news material from FIS competitions will be 30 seconds per discipline/per session and will be accessible on the FIS website until 48 hours after the end of the competition. The financial conditions relating to the provision of this material will be agreed between the FIS and the rights owner.

b) The material will be provided by the rights owner or host broadcaster as soon as possible, but at the latest six hours after the end of the competition.

208.6 Mobile and portable devices

In the cases where the rights for distribution by mobile and portable devices have been awarded, the rights purchaser/operator will be free to produce from the television signal the content it considers best meets the needs of its customers. Any live streaming of television programmes on a national basis using these devices shall not be altered from that available through other distribution channels.

In countries where no mobile distribution rights have been sold, short extracts or clips of a maximum duration of 20 seconds will be offered to operators when the material has been produced and for a period of 48 hours on the condition that the operators pay all related technical costs to the agency/company managing the rights.

208.7 Future developments

The principles contained in this Rule 208 shall be the basis for the exploitation of Electronic Media Rights to FIS events in the future. The FIS Council, on the recommendation of the National Ski Associations, the relevant commissions and experts, will establish the conditions considered appropriate to each new development.

209 Film Rights

All agreements regarding film productions of FIS competitions will be between the film producer and the National Ski Association or the company managing the related rights. All contractual arrangements regarding the exploitation of other media rights will be respected.

210 Organisation of Competition

211 The Organisation

211.1 The Organiser

211.1.1 The Organiser of a FIS competition is the person or group of persons who make the necessary preparations and directly carry out the running of the competition in the resort.

211.1.2 If the National Ski Association itself is not the competition organiser, it may appoint an affiliated club to be the organiser.

211.1.3 The organiser must ensure that accredited persons accept the regulations regarding the competition rules and Jury decisions, and in World Cup races the organiser is obliged to obtain the signature of all persons who do not have a valid FIS season accreditation to this effect.

211.2 The Organising Committee

The Organising Committee consists of those members (physical or legal) who are delegated by the organiser and by the FIS. It carries the rights, duties and obligations of the organiser.

211.3 Organisers which hold competitions involving competitors not qualified under art. 203 - 204 have violated the International Competition Rules and measures are to be taken against them by the FIS Council.

212 Insurance

212.1 The organiser must take out liability insurance for all members of the Organising Committee. The FIS shall provide its employees and appointed officials, who are not members of the Organising Committee (e.g. equipment controller, medical supervisor, etc.), with liability insurance when they are acting on behalf of the FIS.

212.2 Before the first training day or competition, the organiser must be in possession of a binder or cover notes issued by a recognised insurance

company and present it to the Technical Delegate. The Organising Committee requires liability insurance with coverage of at least CHF 1 million; whereby it is recommended that this sum is at least CHF 3 million; this sum can be increased according to decisions of the FIS Council (World Cup etc).
Additionally, the policy must explicitly include liability insurance claims by any accredited participant, including competitors, against any other participant including but not limited to officials, course workers, coaches, etc

212.3 The Organiser respectively its' National Ski Association may request the FIS insurance broker to arrange cover for the competition (at the cost of the Organiser) if the organiser does not have the necessary insurance cover in place.

212.4 All competitors participating in FIS events must carry accident insurance, in sufficient amounts to cover accident, transport and rescue costs including race risks. The National Associations are responsible for adequate insurance coverage of all their competitors sent and inscribed by them.
The National Ski Association or their competitors must be able to show proof of the respective insurance coverage at any time on request of the FIS, one of its representatives or the organising committee.

213 Programme

A programme must be published by the organisers for each competition listed in the FIS Calendar which must contain the following:

213.1 name, date and place of the competitions, together with information on the competition sites and the best ways of reaching them,

213.2 technical data on the individual competitions and conditions for participation,

213.3 names of principal officials,

213.4 time and place for the first team captains' meeting and the draw,

213.5 timetable for the beginning of the official training and the start times,

213.6 location of the official notice board,

213.7 time and place for the prize-giving,

213.8 final date of entry and address for entries, including telephone, telefax and e-mail address.

214 Announcements

214.1 The Organising Committee must publish an announcement for the event. It must contain the information required by art. 213.

214.2 Organisers are bound by the rules and decisions of the FIS in limiting the number of entries. A further reduction in entries is possible under art. 201.1 provided it is made clear in the announcement.

214.3 Postponements or cancellations of competitions and programme alterations must be communicated immediately by telephone, e-mail or telefax to the FIS, all invited or entered National Ski Associations and the appointed TD. Competitions moved to an earlier date must be approved by the FIS.

215 Entries

215.1 All entries must be sent so that the Organising Committee receives them before the final date of entry. The organisers must have a final and complete list not later than 24 hours before the first draw.

215.2 National Ski Associations are not permitted to enter and draw the same competitors in more than one competition on the same date.

215.3 Only National Ski Associations are entitled to make entries for international competitions. Every entry should include:

215.3.1 code number, name, first name, year of birth, National Ski Association;

215.3.2 an exact definition of the event for which the entry is made.

215.4 Entries for FIS World Championships (see Rules for the Organisation of FIS World Championships).

215.5 The entry of a competitor by the National Ski Association for a race shall constitute a contract solely between the competitor and the organiser and shall be governed by the Athletes Declaration.

216 Team Captains' Meetings

216.1 The time and location of the first team captains' meeting and of the draw must be shown in the programme. The invitations for all other meetings have to be announced to the team captains at their first meeting. Emergency meetings must be announced in good time.

216.2 Representation by a substitute from another nation during discussions at team captains' meetings is not allowed.

216.3 The team captains and trainers must be accredited by the organisers according to quota.

216.4 Team captains and trainers must obey the ICR and the decisions of the Jury and must behave in a proper and sportsmanlike manner.

217 Draw

217.1 Competitors' starting order for each event and each discipline is decided according to a specific formula by draw and/or point order.

217.2 The competitors entered by a National Ski Association will only be drawn if provided written entries have been received by the organiser before the closing date.

217.3 If a competitor is not represented at the draw by a team captain or trainer, he will only be drawn if it is confirmed by telephone, telegram, e-mail or telefax by the beginning of the meeting that the competitors who are entered will participate.

217.4 Competitors who have been drawn and are not present during the competition must be named by the TD in his report, indicating if possible the reasons for absence.

217.5 Representatives of all the nations taking part must be invited to the draw.

217.6 If a competition has to be postponed by at least one day, the draw must be done again.

218 Publication of Results

218.1 The unofficial and official results will be published in accordance with the rules for the specific event.

218.1.1 Transmission of Results

For all international competitions, there must be direct communication between the Start and the Finish. In Olympic Winter Games the communications must be assured by fixed wiring.
In the data service area, access to the internet (at least ADSL speed) is required for World Cup, World Championships and Olympic Winter Games competitions.

218.2 The data and timing generated from all FIS competitions is at the disposal of FIS, the organiser, the National Ski Association and participants for use in their own publications, including websites. Use of data and timing on websites is subject to the conditions laid down in the FIS Internet Policies.

218.3 FIS Internet Policies and Exchange of Data relating to the FIS Competitions

218.3.1 General

As part of the ongoing promotion of skiing and snowboard, the International Ski Federation encourages and appreciates the efforts made by the National Ski Associations to provide messages and information to their members and fans. An increasingly important medium for this provision of information is through the Internet.

The following policy has been established in order to assist National Ski Associations through the provision of data from FIS competitions, and to clarify certain conditions that relate to the use and presentation of the data from FIS competitions.

218.3.2 FIS Calendar data

A specific FIS Calendar programme has been developed for the free use of National Ski Associations and other third parties. An updated Fiscal zip file containing revised calendar information will be available every week from the ftp site: ftp://ftp.fisski.ch for uploading into the FIS Calendar program.

Thereafter it may be exported into National Ski Association's own software if necessary for planning purposes, etc. This data may not be passed on to third parties or organisation for commercial use.

218.3.3 *Results and Standings*

National Ski Associations can obtain official results, after they have been approved by the FIS Points verification procedure at the FIS Office. This data will be available on request to the FIS IT Manager who will provide the necessary instructions and/or routines on a case-by-case basis. The FIS World Cup results will include a credit to the results service providers. Standings from the various Cup series will also be available after receipt from the results service providers in the case of the FIS World Cup, or they have been input manually for other Cup series.

1. The results and data from FIS competitions may only be used on the National Ski Associations', Organisers' and participants' websites and may not be passed on for commercial use to third parties or organisations.
   The National Ski Association may download the data into its' own software for evaluating performances, etc.

2. National Ski Associations who wish to display results on their website, but do not have a database structure to upload the raw data can create a link to the relevant page of the FIS website. The exact addresses can be obtained from the FIS IT Manager.

3. A link will be established from the FIS Website to all National Ski Associations with their own website, as well as the ski industry and relevant media websites on requests. A reciprocal link to the FIS website should also be created.

218.3.4 *Organisers access to results*

Organisers of FIS World Cup races can obtain official results from their races after they have been approved by the FIS Points verification procedure in the results database. The upload is a computer-automated procedure for World Cup races and takes place immediately after the end of the race.

The pdf file containing the results and standings can be downloaded from www.fis-ski.com and from ftp://ftp.fisski.ch/ followed by the discipline code and the name of the site: AL (Alpine), CC (Cross-Country), JP (Ski Jumping), NK (Nordic Combined); SB (Snowboarding), FS (Freestyle) etc. The individual competition can be identified by the competition codex as published on the detailed page of the calendar on www.fis-ski.com.

219 Prizes

219.1 The detailed rules concerning the awarding of prizes will be published by the FIS. Prizes shall consist of mementos, diplomas, cheques or cash. Prizes for records are forbidden. The FIS Council decides in the autumn on the minimum respectively maximum values of the prize money approximately one and a half years before the competition season. The organisers have to inform the FIS by October 15th of the amount.

219.2 If two or more competitors finish with the same time or receive the same points, they shall be given the same placing. They will be awarded the same prizes, titles or diplomas. The allocation of titles or prizes by drawing lots or by another competition is not allowed.

219.3 All prizes are to be awarded no later than the final day of a competition or event series.

220 Team Officials, Coaches, Service Personnel, Suppliers and Firms' Representatives

In principle these regulations apply to all disciplines, taking into consideration the special rules.

220.1 The Organising Committee of an event must provide the Technical Delegate with a list of persons accredited to the competition.

220.2 It is forbidden for suppliers and for persons in their service to advertise inside the restricted area or to wear clearly visible commercial markings on their clothing or equipment which do not conform with art. 207.

220.3 Team officials accredited service personnel and suppliers receive from the FIS an official FIS accreditation and must perform their specified function. The individual organisers are free to accredit additional company representatives or other important persons.

220.4 Only persons who have the official FIS accreditation or a special accreditation from the organiser for course or jumping-hill have access to the courses and jumping-hills (according to special rules of the discipline).

220.5 The Different Types of Accreditation

220.5.1 Technical Delegates, the Jury, and the persons mentioned in art. 220 with clearly visible accreditation have access to the courses and jumping-hills.

220.5.2 Servicemen attached to teams are permitted entry to start area and service area at the finish. They are not allowed entry to the courses or jumping-hills.

220.5.3 Company representatives accredited at the discretion of the organisers who do not have FIS accreditation are not permitted entry to the courses and restricted service areas.

221 Medical Services, Examinations and Doping

221.1 National Ski Associations are responsible for the fitness of their competitors to race. All competitors, male and female are required to undergo a thorough evaluation of their medical health. This evaluation is to be conducted within the competitor's own nation.

221.2 If requested by the FIS Medical Committee or its representative, competitors must undergo a medical examination before or after the competition.

221.3 Doping is forbidden. Any offence under these FIS Anti Doping Rules will be punished under the provisions of the FIS Anti-Doping Rules.

221.4 Doping controls may be carried out at any FIS competition (as well as out-of competition). Rules and procedures are published in the FIS Anti-Doping Rules and FIS Procedural Guidelines.

221.5 Gender of the Competitor

If any question or protest arises as to the gender of the competitor, FIS shall assume responsibility for taking the necessary steps to determine the gender of the competitor.

221.6 Medical Services Required from Event Organisers

The health and safety of all those involved in a FIS competition is a primary concern of all event Organisers. This includes the competitors as well as volunteers, course workers and spectators.
The specific composition of the medical support system is dependent on several variables:

- The size, level, type of the event being held (World Championships, World Cup, Continental Cup, FIS-level, etc.) together with the local medical standards of care and geographic locations and circumstances.
- The estimated number of competitors, support staff and spectators
- The scope of responsibility for the Event Medical Organisation (competitors, support staff, spectators) should also be determined.

The Organiser / The Chief of Medical and Rescue Services must confirm with the race director or technical delegate that the required rescue facilities are in place before starting the official training or competition. In the event of an incident, or issue that prevents the primary medical plan from being utilized, the back up plan must be in place before re-commencing the official training or competition.
The specific requirements concerning facilities, resources, personnel and team physicians are contained in the respective discipline rules and the FIS Medical Guide.

222 Competition Equipment

222.1 A competitor may only take part in a FIS competition with equipment which conforms to the FIS Regulations. A competitor is responsible for the equipment that he uses (skis, snowboard, bindings, ski boots, suit, etc). It is his duty to check that the equipment he uses conforms to the FIS specifications and general safety requirements and is in working order.

222.2 The term competition equipment encompasses all items of equipment which the competitor uses in competitions. This includes clothing as well as apparatus with technical functions. The entire competition equipment forms a functional unit.

222.3 All new developments in the field of competition equipment must be approved in principle by the FIS.
The FIS does not take any responsibility for the approval of new technical developments, which at the time of introduction may contain unknown risk to the health or cause an increase in the risk of accidents.

222.4 New developments must be submitted by May 1st, at the latest, for the following season. The first year new developments can only be approved provisionally for the following season and must be finally confirmed prior to the subsequent competition season.

222.5 The Committee for Competition Equipment publishes equipment by-laws after approval by the FIS Council (definitions or descriptions of the equipment items which are allowed).
In principle unnatural or artificial aids which modify the performance of the competitors and/or constitute a technical correction of the individual's physical predisposition to a defective performance, as well as competition equipment which impact the health of the competitors or increase the risk of accidents are to be excluded.

222.6 Controls

Before and during the competition season or on submission of protests to the Technical Delegate at the competition concerned, various controls can be carried out by members of the Committee for Competition Equipment or official FIS Equipment Controllers. Should there be a well-founded suspicion that regulations were violated, the equipment items must be confiscated immediately by the controllers or Technical Delegates in the presence of witnesses and be forwarded sealed to the FIS, which will submit the items to a final control by an officially recognised institution. In cases of protest against items of the competition equipment, the losing party will bear the investigation costs.
No testing of equipment or material in independent laboratories may be requested at races where a FIS Technical Expert has performed the controls, unless it can be demonstrated that the controls have not been carried out according to the rules.

222.6.1 At all FIS events where official FIS measurement experts using the official FIS measurement tools are appointed, the result of measurements carried out at the time are valid and final, irrespective of previous measurements.

223 Sanctions

223.1 General Conditions

223.1.1 An offence for which a sanction may apply and a penalty be imposed is defined as conduct that:

- is in violation or non-observance of competition rules, or
- constitutes non-compliance with directives of the jury or individual members of the jury in accordance with 224.2 or
- constitutes unsportsmanlike behaviour

223.1.2 The following conduct shall also be considered an offence:

- attempting to commit an offence
- causing or facilitating others to commit an offence
- counselling others to commit an offence

223.1.3 In determining whether conduct constitutes an offence consideration should be given to:

- whether the conduct was intentional or unintentional,
- whether the conduct arose from circumstances of an emergency

223.1.4 All FIS affiliated associations, including their members registered for accreditation, shall accept and acknowledge these rules and sanctions imposed, subject only to the right to appeal pursuant to the FIS Statutes and ICR

223.2 Applicability

223.2.1 *Persons*

These sanctions apply to:

- all persons who are registered with or accredited by the FIS or the organiser of an event published in the FIS calendar (an event) both within and outwith the confines of the competition area and any location connected with the competition, and
- all persons who are not accredited, within the confines of the competition area

223.3 Penalties

223.3.1 *The commission of an offence may subject a person to the following penalties:*

- Reprimand - written or verbal
- Withdrawal of accreditation
- Denial of accreditation
- Monetary fine not more than CHF 100’000.--
- A time penalty

223.3.1.1 FIS-affiliated associations are liable to the FIS for the payment of any fines and incurred administrative expenses imposed on persons whose registration or accreditation they arranged.

223.3.1.2 Persons not subject 223.3.1.1 also are liable to the FIS for fines and incurred administrative expenses. If such persons do not pay these fines, they shall be subject to a withdrawal of any permission to apply for accreditation to FIS events for a period of one year.

223.3.1.3 Payment of fines is due within 8 (eight) days following their imposition.

223.3.2 *All competing competitors may be subject to the following additional penalties:*

- Disqualification
- Impairment of their starting position
- Forfeiture of prizes and benefits in favour of the organiser
- Suspension from FIS events

223.3.3 A competitor shall only be disqualified if his mistake would result in an advantage for him with regard to the end result, unless the Rules state otherwise in an individual case.

223.4 A jury may impose the penalties provided in 223.3.1 and 223.3.2, however they may not impose a monetary fine of more than CHF 5'000.-- or suspend a competitor beyond the FIS event at which the offence occurred.

223.5 The following Penalty decisions may be given verbally:

- reprimands
- the withdrawal of accreditation for the current event from persons who had not been registered with the organiser through their National Associations
- the withdrawal of the accreditation for the current event from FIS-accredited persons

- the denial of accreditation to the current event from persons who are within the confines of the competition area or any other location connected with the competition.

223.6 **The following Penalty decisions shall be in writing:**

- monetary fines
- disqualification
- impaired starting position
- competition suspensions
- withdrawal of accreditation from persons who had been registered through their National Association
- withdrawal of accreditation of FIS accredited persons

223.7 Written Penalty decisions must be sent to the offender (if it is not a competitor), the offender's National Association and the Secretary General of FIS.

223.8 Any disqualification shall be recorded in the Referee's and/or the TD`s Report.

223.9 All penalties shall be recorded in the TD's Report.

224 Procedural Guidelines

224.1 **Competence of Jury**

The Jury at the event has the right to impose sanctions according to the above rules by majority vote. In the case of a tie, the chairman of the Jury has the deciding vote.

224.2 Within the location, especially during the training and the competition period, each voting Jury member is authorised to issue oral reprimands and withdraw the accreditation which is issued for the current event.

224.3 **Collective Offences**

If several persons commit the same offence at the same time and under the same circumstances, the Jury's decision as to one offender may be considered binding upon all offenders. The written decision shall include the names of all offenders concerned, and the scope of the penalty to be assessed upon each of them. The decision will be delivered to each offender.

224.4 **Limitation**

A person shall not be sanctioned if proceedings to invoke such sanction have not been commenced against that person within 72 hours following the offence.

224.5 Each person who is a witness to an alleged offence is required to testify at any hearing called by the Jury, and the Jury is required to consider all relevant evidence.

224.6 The Jury may confiscate objects that are suspected of being used in violation of equipment guidelines.

224.7 Prior to the imposition of a penalty (except in cases of reprimands and withdrawal of accreditation according to 223.5 and 224.2), the person accused of an offence shall be given the opportunity to present a defence at a hearing, orally or in writing.

224.8 All Jury decisions shall be recorded in writing and shall include:

224.8.1 The offence alleged to have been committed

224.8.2 The evidence of the offence

224.8.3 The rule (s) or Jury directives that have been violated

224.8.4 The penalty imposed.

224.9 The penalty shall be appropriate to the offence. The scope of any penalty imposed by the Jury must consider any mitigating and aggravating circumstances.

224.10 Remedies

224.10.1 Except as provided for in 224.11, a penalty decision of the Jury may be appealed in accordance with the provisions in the ICR.

224.10.2 If an appeal is not filed within the deadline established in the ICR, the penalty decision of the Jury becomes final.

224.11 The following decisions of the Jury are not subject to appeal:

224.11.1 Oral penalties imposed under 223.5 and 224.2

224.11.2 Monetary fines less than CHF 1'000.-- (One Thousand Swiss Francs) for single offence and a further CHF 2'500.-- for repeated offences by the same person.

224.12 In all remaining cases, appeals are to be directed to the Appeals Commission, as per the ICR.

224.13 The Jury shall have the right to submit to the Appeals Commission recommendations for penalties in excess of monetary fines of CHF 5'000.- and suspensions beyond the event in which the offence occurred (223.4).

224.14 FIS Council shall have the right to submit to the Appeals Commission comments with respect to any written penalty decisions by the Jury.

224.15 Costs of Proceedings

Fees and cash expenses, including travel expenses (costs of the proceedings) are to be calculated comparable to costs paid to TD's and are to be paid by the offender. In the case of a reversal of Jury decisions, in whole or in part, the FIS covers all costs.

224.16 Enforcement of Monetary Fines

224.16.1 The FIS oversees the enforcement of monetary fines and the costs of proceedings. Enforcement costs are considered costs of the proceedings.

224.16.2 Any outstanding monetary fines imposed on an offender is considered a debt of the National Association to which the offender is a member.

224.17 Benefit Fund

All monetary fines are paid into the FIS Youth Promotion Fund.

224.18 These rules are not applicable to any violation of FIS Doping rules.

225 Appeals Commission

225.1 Appointments

225.1.1 The FIS Council shall appoint from the Discipline Sub-committee for Rules (or Discipline Committee if there is no Rules Sub-Committee) a Chairman and a Vice Chairman of the Appeals Commission. The Vice Chairman shall preside when the Chairman is either unavailable or is disqualified for bias and prejudice.

225.1.2 The Chairman shall appoint 3 members, which may include himself, to the Appeals Commission from the Discipline Rules Sub-Committee or Discipline Committee for each case appealed or submitted to be heard, whose decisions shall be by majority vote.

225.1.3 To avoid either actual bias and prejudice or the appearance of bias and prejudice, members appointed to an Appeals Commission shall not be members of the same National Association as the offender whose case is under appeal. In addition, members appointed to an Appeals Commission must report voluntarily to the Chairman any bias and prejudice they may hold for or against the offender. Persons who are biased and prejudiced shall be disqualified from serving on the Appeals Commission by the Chairman or, in the event the Chairman is disqualified, by the Vice Chairman.

225.2 Responsibility

225.2.1 The Appeals Commission shall only hold hearings with respect to appeals by offenders or by the FIS Council from decisions of competition juries, or matters referred to it by competition juries recommending penalties in excess of those provided for in the Sanction rules.

225.3 Procedures

225.3.1 The Appeal must be decided within 72 hours of receipt of the Appeal by the Chairman, unless all parties involved in the Appeal agree in writing to an extension of time for the hearing.

225.3.2 All appeals and responses must be submitted in writing, including any evidence the parties intend to offer in support of or in response to the Appeal.

225.3.3 The Appeals Commission shall decide on the location and format for the Appeal (phone conference, in person, e-mail exchanges).
The Appeals Commission members are required to respect the confidentiality of the appeal until the decision is made public and to consult only with the other members of the panel during the deliberations.
The Chairman of the Appeals Commission may request additional evidence from any of the parties involved, providing this does not require disproportionate means.

225.3.4 The Appeals Commission shall allocate costs of the appeal pursuant to 224.15.

225.3.5 Decisions of the Appeals Commission may be announced orally at the conclusion of the deliberations or hearing should one take place. The decision, together with its reasoning, shall be submitted in writing to the FIS, which shall deliver them to the parties involved, their National Associations and all members of the Jury whose decision was appealed. In addition, the written decision shall be available at the FIS Office.

225.4 Further Appeals

225.4.1 Decisions of the Appeals Commission may be appealed to the FIS Court in accordance with Article 52; 52.1 and 52.2 of the Statutes.

225.4.2 Appeals to the FIS Court shall be in writing and submitted to the FIS Secretary-General in accordance with the time limits prescribed in Article 52; 52.1 and 52.2 of the Statutes from the date of the publication of the Appeals Commission decision.

225.4.3 An Appeal to the Appeals Commission or to the FIS Court will not delay the implementation of any penalty decision of the Competition Jury, Appeals Commission or Council.

226 Violation of Sanctions

Where there is a violation of a sanction that has been imposed (according to ICR 223 or the FIS Anti-Doping Rules, the Council may impose such further and other sanctions that it considers appropriate.
In such cases, some or all of the following sanctions may apply:

226.1 Sanctions against individuals involved:

- a written reprimand;

and/or

- a monetary fine not to exceed the sum of CHF 100'000.--

and/or

- competition suspension at the next level of sanction - for example if a three month suspension for a doping offence was imposed, a violation of the suspension will cause a two year suspension; if a two year suspension for a doping offence was imposed, a violation of the suspension will cause a lifetime suspension;

and/or

- withdrawal of accreditation from individuals involved.

226.2 Sanctions against a National Ski Association:

- withdrawal of FIS funding to the National Ski Association;

and/or

- cancellation of future FIS events in the country involved;

and/or

- withdrawal of some or all FIS membership rights, including participation in all FIS calendar competitions, voting rights at the FIS Congress, membership of FIS Committees.

2nd Section

300 Cross-Country Competitions

300.1 FIS sanctioned competitions are governed by the following FIS publications: ICR – first section (200s), second section (300s), World Cup Rules, Rules and Guidelines of the FIS Points and annual Cross-Country Guidelines approved by the FIS Cross-Country Committee.

A. Organisation

301 The Organising Committee (OC)

301.1 An OC must be appointed for an international competition. The OC consists of members appointed by the National Ski Association (NSA) and the OC. The OC administers the rights, duties and obligations of the organiser. See article 210.

302 The Competition Officials

302.1 Appointment of the Competition Officials

302.1.1 FIS appointed officials are

- At Olympic Winter Games (OWG) and World Ski Championships (WSC): the Technical Delegate (TD), Assistant TD, Jury Members and FIS Race Director (RD)
- At World Cup (WC): the TD, Assistant TD and FIS Race Director (RD)
- At Junior World Ski Championships (JWSC): the TD, Assistant TD and one Jury member
- At Continental Cups (COC) and FIS competitions: the TD

302.1.2 NSA appointed officials are

- At JWSC, WC, COC and FIS competitions: National Assistant TD

302.1.3 Organising Committee Appointed Members

302.1.3.1 The Organiser appoints all other members. For all Olympic Winter Games (OWG, YOG) and World Ski Championships (WSC, JWSC) the following key technical officials have to be submitted to the FIS Council for approval:

- Chief of Competition
- Ass. Chief of Competition
- Race Secretary
- Chief of Course
- Chief of Stadium

302.1.3.2 The Chair of the OC or his/her Assistant represents the OC to the public and chairs the meetings of the OC. He/she cooperates before and after the competition closely together with FIS. See art. 210.

Within the OC there must be one person appointed as the Chief of Competition who is qualified to conduct the competition and to supervise the technical aspects of the competition as well as be the main interface with the jury. The Competition Officials are specialists who are particularly well qualified for their assigned duties. Each official is allowed to do only one job. Officials must be easily recognized by their uniforms, armbands or badges.

302.2 Competition Officials Appointed by the Chief of Competition

302.2.1 The Competition Officials are

- Competition secretary
- Chief of course
- Chief of timekeeping and data processing
- Chief of stadium
- Chief of control and competition security

The chief of competition will appoint other officials as necessary.

302.3 The Competition Officials and their Duties

302.3.1 The chief of competition is responsible for all aspects of the competition and supervises the work of all other competition officials. He must periodically inform the jury about the preparatory work and about changes that may have to be made. He must provide course maps, course profiles, stadium plans, timetable etc to the jury members in due time prior their arrival to the competition site.

302.3.2 The competition secretary is responsible for all secretarial work concerned with the technical aspects of the competition: entries, team captains' meeting, minutes, publication of start lists and results, protests.

302.3.3 The chief of course is responsible for the preparation (grooming, markings, and fencing) of the competition course, ski testing areas, warm-up course as well as proper setup and safe placement of any commercial marketing frames and structures.

302.3.4 The chief of timekeeping and data processing is responsible for the direction and coordination of the officials working in the timing area (starter, finish referee, finish controller, manual timers, electronic timers, intermediate timekeepers and calculations officials' work).

302.3.5 The chief of stadium is responsible for all activities in the stadium "field of play" area. This includes the course preparation and markings in the stadium, proper setup and safe placement of any commercial marketing frames and structures in the stadium, safe and well marked pathways for competitors to the start. The chief of stadium is responsible for ensuring sufficient areas for athletes clothing, coaches, equipment suppliers, anti-doping officials and medical staff in the finish area as well as good cooperation with media and ceremonies in the finish area.

302.3.6 The chief of control and competition security is responsible to organise together with the Jury the suitable placing of controllers, to collect all pertinent information and control cards after the competition and to report any incidents to the Jury.

Two controllers are necessary for each post. The number and placing of the controllers is determined without notifying the competitors, coaches or other officials. The controllers at each post record violations and the passing of the competitors. They may use video equipment. After the competition they must inform the chief of control and competition security of any violations to the rules and be ready to testify before the Jury.

302.3.7 The chief of media is responsible for providing optimal working conditions for media, equipment suppliers and competition officials in the media areas. This includes responsibility for the layout, setup, signage and operation of the mix zone. The mix zone includes the interview positions for host broadcaster, TV stations, radio, and journalists, as well as an area for photographers. Rooms for press conferences and related media infrastructure must be provided. He is also responsible for the flow of pertinent information to the press, radio and TV.

302.3.8 The chief of medical and rescue services is responsible for the organisation of all medical and first aid arrangements and for the quick transport of patients to the nearest appropriate medical facility.

The first aid and medical services must be fully operational during all official training times.

Details of the Medical Support Requirements are given in chapter 1 of the FIS Medical Guide containing Medical Rules and Guidelines.

303 The Jury and its Duties

303.1 Members of the Jury

303.1.1 For all Olympic Winter Games (OWG) and World Ski Championships (WSC) the following will serve in the Jury:

- The TD, who is chair of the Jury (appointed by FIS)
- The Assistant TD (appointed by FIS)
- The Chief of Competition (subject to approval by the FIS Council)
- Two other foreign members (appointed by FIS)
- FIS Race Director (appointed by FIS)

They are appointed by the FIS Council on proposal by the FIS Cross-Country Committee.

303.1.2 For WC the Jury will consist of the following

- The TD, who is chair of the Jury (appointed by FIS)
- The Assistant TD (appointed by FIS)
- FIS Race Director (appointed by FIS)
- The Chief of Competition
- The National TD Assistant (appointed by the host NSA in cooperation with the regional TD coordinator)

303.1.3 For JWSC the Jury will consist of the following

- The TD, who is chair of the Jury (appointed by FIS)
- The Assistant TD (appointed by FIS)

- One Jury member (appointed by FIS)
- The Chief of Competition
- The National TD Assistant (appointed by the host NSA in cooperation with the regional TD coordinator)

303.1.4 For COC and FIS competitions the Jury will consist of the following

- The TD, who is chair of the Jury (appointed by FIS)
- The Chief of Competition
- The National TD Assistant (appointed by the host NSA in cooperation with the regional TD coordinator)

303.2 The Role of the Technical Delegate (TD) and Assistant Technical Delegate (ATD) at WC, WSC, OWG, JWSC, COC and FIS competitions

303.2.1 Authority

The TD is the delegate of the FIS to the organising body, and is a guarantor for the FIS that the competition is conducted in accordance with the FIS Rules. The TD must have a valid TD license. The TD has the responsibility to involve and utilize the FIS appointed Assistant TD and the NSA appointed Assistant TD in the preparation, the carrying out and the follow up of the competition. The TD is responsible for organising the work of the Jury.

303.2.2 Appointment

303.2.2.1 For OWG, WSC, WC and JWSC, the TD, Assistant TD and other Jury members must possess a TD-license for Cross-Country.

303.2.2.2 For all OWG, WSC and WC competitions the TD and Assistant TD must be from another nation. For other international competitions, TDs from the same nation may be appointed. Competitions which appear regularly in the FIS Calendar shall have a foreign TD at least every four years.

303.2.2.3 For OWG, WSC, JWSC and WC competitions the TD and Assistant TD are appointed by the FIS Cross-Country Committee. For OWG, WSC and JWSC the appointments of the FIS Cross-Country Committee must be confirmed by the FIS Council. For other international competitions the TDs are appointed by the Sub-Committee for Rules and Control. For JWSC, WC, COC and FIS competitions the NSA must appoint a National Assistant TD who is supervised and instructed by the TD.

303.2.2.4 Persons holding a position of responsibility for a Nations Team are not permitted to be nominated for the position of a TD or Jury member for OWG, WSC, JWSC and WC.

303.3 Duties of the Jury

303.3.1 The Jury must ensure that the competition is organised and carried out according to the FIS Rules. The responsibilities begin when the Jury is appointed and are ended when protests from the final competition have been decided and the official results are produced. The first Jury meeting should be held before the first official training.

303.3.2 The Jury must clarify and decide

- Whether a competition shall be postponed, interrupted or cancelled.
- Whether the competition course shall be adjusted due to safety reasons, or that additional safety measures (fences, protective material, etc) shall be installed along the course
- Whether late entries and substitutions may be accepted.
- Whether protests should be accepted and sanctions or disqualification announced.
- Whether to apply for sanctions against an athlete or coach.
- Whether there will be a change of starting order and method of start in special cases.
- Any questions not covered by FIS Rules.

303.3.3 Within the location, especially during the official training and competition times, each voting Jury member is authorized to issue verbal reprimands and withdraw the accreditation which is valid for the current event (see also 224.2).

303.4 Jury Duties before and during the Competition

303.4.1 All Jury members must arrive at the site in due time before the competition so that a check can be made before the beginning of the official training and that the correct preparations for training and competition are being carried out, and make any necessary improvements prior to the start of competition.

The TD is responsible that all Jury duties are carried out and should distribute tasks among Jury members according to their abilities and experience.

Jury members should be able to ski the course and make a judgment of the course preparations.

303.4.2 Jury duties before arrival to competition site

- Invitation
- Competition programme
- Entries and eligibility questions
- Course and stadium plans
- Snow conditions, contingency plans (in case of bad snow conditions)
- Site visits (if decided by FIS Cross-Country Committee)

303.4.3 Jury duties on competition site before competition

- Liability insurance (ICR 212.2)
- Course:
  Homologation, preparation (snow conditions, grooming, grooming equipment, forerunners, snow patrols, plans in case of extreme weather conditions), course marking, safety measures, coach/no coach areas, feeding stations, ski doo access paths (if applicable)

- Team area:
  Waxing facilities, test area, warm-up courses
- Stadium:
  Detailed plans, markings, fencing, general logistics, information points, loudspeakers
- Medical service
  First aid stations, rescue plans, doping control (facilities, chaperons)
- Team accommodation:
  Level, distance, pricing, meal arrangements and quality
- Race office:
  Location, organisation, equipment, opening hours, information for the teams, forms, lists (FIS Points, cup standings, written reprimand), entries (eligibility, quotas, FIS Codes, grouping – if applicable)

- Team Captains' meeting:
  Place, schedule, room equipment, refreshments, agenda, presentation, information for teams, test draw (if applicable), monitor the meeting and make decisions during the meeting if necessary
- Timing:
  Start and finish procedures, intermediate timing, photo finish, primary timing, backup timing, data processing, start list content and layout, result list content and layout, XML data transmission to FIS
- Competition control:
  Posts, technique control, equipment, procedures, ski marking (if applicable)
- Jury:
  Working conditions, identification, communication
- Ceremonies:
  Schedule, award of prizes, protocol
- Media (if applicable):
  Press center, media information, press conferences
- Security:
  Accreditation system, identification, access points and access control
- Transportation and parking

303.4.4 Jury duties during competition

- All Jury members should be present on competition site in good time (normally 2 hours before first start)
- Can competitions start as scheduled (stadium and course preparation, weather conditions, teams on site?)
- Substitutions and late entries
- Changes to warm-up and ski test procedures on course
- Decide on re-grooming, rescheduling of forerunners and use of snow patrols if necessary
- Inform teams on Jury decisions
- Monitor the execution of competitions
- Decide on all reported infractions including ICR 207 and late starts (if force majeure was the reason for late start)

- Decide on valid protests
- Document Jury decisions along with used evidence to be used in case of appeal
- Check timing and results, calculate race penalty, declare official results
- Check that official results are published on FIS website
- TD must prepare his/her TD report within 3 days after the competition.

304 Reimbursement of Expenses

304.1 Requirements of the Organisers

304.1.1 The competition officials have a right to reimbursement for their travel expenses (highway taxes included), as well as free accommodation and meals during the assignment. This rule also applies to agreed inspections as well as the trip to the competition (train, first class; for longer distances air fare, tourist class; or payment of a per kilometer fee of CHF 0.70 or equivalent). In addition a fixed daily rate of CHF 100 is added for the travel days to and from, as well as each day of the assignment, which includes postage charges for mailing reports, etc. Double charges (e.g. travelling home on the same day as the last race) are not permitted. If overnight accommodation during the journey to and from the assignment is necessary, this must be justified and reimbursed separately.

The maximum payment for personal vehicle transportation cannot exceed the equivalent cost of an airfare in economy class.

304.1.2 Reimbursement applies as follows:

- For OWG, WSC and JWSC special regulations apply.
- At WC for the TD, the foreign Assistant TD and the National Assistant TD.
- At other international competitions for the TD and the National Assistant TD.

305 Team Captains' Meeting

305.1 Procedure

305.1.1 Before each competition a Team Captains’ meeting is carried out. It should take place one day before the competition.

305.1.2 The date, time and place of the Team Captains' meeting have to be published in the competition programme (article 216). The Jury decides how many representatives per participating team and how many accredited officials are allowed to take part in the Team Captains' meeting.

305.1.3 At OWG, WSC, WC and JWSC competitions the seating arrangements of the participating teams have to be marked.

305.1.4 At OWG, WSC, WC and JWSC competitions the Team Captains' meeting is held in English and also in the original language of the organiser if necessary. Supplementary translations should be provided.

305.1.5 The Team Captains' meeting is conducted by the chief of competition.

305.1.6 At the Team Captains' meeting, a majority of the voting members is enough for a Jury recommendation. Each team has one vote.

305.1.7 When necessary, the Jury may decide to interrupt the meeting in order to make a decision on recommendations and bring this result back to the meeting (article 303.3.2).

305.2 Agenda

305.2.1 A written agenda has to be distributed for the Team Captains' meeting. It is prepared by the competition secretary in cooperation with the chief of competition and the Jury.

305.2.2 At all international competitions the agenda normally contains the following items

- Roll call
- introduction of the members of the OC
- introduction of the Jury, if necessary appointment of the Jury
- weather forecast
- checking of the entries or grouping of the competitors
- draw or start list composition
- description of the stadium (access, ski marking [if applicable], start, finish, exchange zone for relay, tents for clothes changing, exit etc.)
- description of the course (access, profile, locations for intermediate timing and feeding, security problems, course markings etc.)
- preparation of the course
- time, locations and regulations for ski testing
- times and courses for training
- general information from the TD
- general information from the FIS Race Director
- general information from the Organiser

305.2.3 Minutes which contain all topics of discussion, Jury decisions and the recommendations made must be taken at the Team Captains' meeting.

B. The Cross-Country Competitions

310 Competition Formats and Programmes

310.1 Table for Distances and Course Lengths

Race Format	Competition Distance (km)	Course Length (km)
Interval start competition	2.5, 3.3, 3.75, 5, 7.5, 10, 15, 30, 50	2.5, 3.3, 3.75, 5, 7.5, 8.3, 10, 12.5, 15, 16.7
Mass Start competition	10, 15, 30, 50	2.5, 3.3, 3.75, 5, 7.5, 8.3, 10, 12.5, 16.6
Popular competitions	No limitations	No limitations

Skiathlon	5+5, 7.5+7.5, 10+10, 15+15	2.5, 3.3, 3.75, 5, 7.5, 10
Pursuit competition (2nd part)	5, 7.5, 10, 15	2.5, 3.3, 3.75, 5, 7.5, 10
Relay competition (teams with 3 or 4 competitors, can include mixed gender)	2.5, 3,3, 5, 7.5, 10	2.5, 3.3, 3.75, 5
Individual Sprint Men	1 – 1.8	0.5 – 1.8
Individual Sprint Ladies	0.8 – 1.6	0.4 – 1.6
Team Sprint Men	2x(3-6) x 1 – 1.8	0.5 – 1.8
Team Sprint Ladies	2x(3-6) x 0.8 – 1.6	0.4 – 1.6

This table is valid for organising multi-lap races but when choosing a short course with many laps the overall distance, start format and course width must be considered.

Individual Sprint and Team Sprint competitions can be carried out on one or more laps.

310.2 Technique Definitions

310.2.1 Classical Technique

310.2.1.1 Classical technique includes the diagonal techniques, the double poling techniques, herringbone techniques without a gliding phase, downhill techniques and turning techniques.

310.2.1.2 Single or double-skating is not allowed.

310.2.1.3 Turning techniques comprise steps and pushes in order to change directions. Where there is a set track, turning techniques with pushing are not allowed. This will also apply to competitors skiing outside of the set track.

310.2.2 Free Technique
Free technique includes all Cross-Country skiing techniques.

310.3 The Programmes for OWG, WSC, JWSC, WC and FIS Competitions

310.3.1 As a principle the number of competitions in the two techniques should be equal in WC every year, and the same for the OWG, WSC and JWSC.

310.3.2 OWG and WSC

310.3.2.1 For the OWG and the WSC competitions, the programme is:

Interval start competitions:	Men:	15 km C/F
	Ladies:	10 km C/F
Mass start competitions:	Men:	50 km C/F
	Ladies:	30 km C/F
Skiathlon:	Men:	15 km C – 15 km F
	Ladies:	7.5 km C – 7.5 km F
Relay competitions:	Men:	4 x 10 km C/F
	Ladies	4 x 5 km C/F

Individual Sprint competitions:	Men:	1.0 – 1.8 km C/F
	Ladies:	0,8 – -1.6 km C/F
Team Sprint competitions	Men	1.0 – 1.8 km C/F
	Ladies	0,8 – 1.6 km C/F

NOTE: Techniques (C/F) will alternate between OWG and WSC, as well as between Individual and Team Sprint competitions, and between Interval and Mass start competitions.

The composition of the programme can change due to the fact that there are more competition days available during the OWG than at WSC. The TV coverage will be a major factor in these considerations.

Skiathlon will always be conducted with classical technique first and then free technique.

The relay competitions will be conducted using two legs classical first and then two free technique legs.

310.3.2.2 At WSC a qualification competition will be scheduled for ladies with more than 120 FIS Points and for men with more than 90 FIS Points. The skiers achieving a top 10 ranking in this qualification competition will be allowed to start in the WSC interval start competition as part of their Nations quota.

310.3.3 World Cup

The programme for the World Cup season is determined by the FIS every year. Distances and techniques are decided annually. To be able to support development of the Cross-Country sport, test competitions can be a part of the WC programme. Long distance competitions may be included.

310.3.4 JWSC

For JWSC competitions the formats, distances and techniques will be

	Ladies	Men
Interval start	5 km F*	10 km F*
Skiathlon	5 km C + 5 km F	10 km C + 10 km F
Sprint	0.8 – 1.6 km C*	1 – 1.8 km C*
Relay	4 x 3.3 km C/F	4 x 5 km C/F

* Interval start and Sprint competitions will alternate techniques each year.

310.3.5 U23 WSC

	Ladies	Men
Interval start	10 km F*	15 km F*
Skiathlon	7.5 km C + 7.5 km F	15 km C + 15 km F
Sprint	0.8 – 1.6 km C*	1 – 1.8 km C*

* Interval start and Sprint competitions will alternate techniques each year.

311 Cross-Country Competition Courses

311.1 Fundamental Characteristics

311.1.1 Cross-Country courses must be laid out so that they provide a technical, tactical and physical test of the competitors' qualifications. The degree of difficulty should be in accordance with the level of the competition. The course should be laid out as naturally as possible to avoid any monotony, with rolling undulating sections, climbs, and downhill sections.

Rhythm should not be broken by too many sharp changes in direction or steep climbs. The downhill sections must be laid out so that they create a challenge to the competitors. At the same time it should be possible to ski the course even under fast conditions.

311.1.2 In principle, the Cross-Country course should consist of

- One third uphills defined as climbs with a gradient between 9% (1:11) and 18% (1:5.5) with height differences over 10 meters plus some short climbs steeper than 18%.
- One third undulating, rolling terrain, utilizing all terrain features with short climbs and downhills (with height differences of 1-9 meters).
- One third varied downhills, demanding versatile downhill techniques.

311.1.3 At OWG, WSC, JWSC, WC and COC Cross-Country competitions the courses may only be used in the direction established in the homologation certificates.

311.1.4 A ski glide testing area with testing tracks for all participating teams must be located close to the stadium. It should be close to the team wax cabins and warm-up track. The testing tracks must be prepared to the same standard as the competition course.

311.1.5 Warm up courses should be prepared as close as possible to the stadium.

311.2 The Homologation

311.2.1 All FIS Cross-Country competitions should be carried out on homologated courses. The details on homologation procedure are described in FIS Cross-Country homologation manual.

311.2.2 In competitions designed for Cross-Country sport promotion it is possible to use courses outside of the homologation standards providing they have been approved by the Sub-Committee for Rules and Control.

311.2.3 The organiser must supply copies of the approved course maps and the homologation certificate to its TD. A graduated scale and a north direction arrow must be included.

311.2.4 Definitions

311.2.4.1 HD (height difference) is the difference in height between the lowest and highest points of a competition course.

311.2.4.2 MC (Maximum climb) is the climb with the highest partial height difference, in other terms, the biggest uphill. The uphill can be interrupted by a section

of undulating terrain that does not exceed 200 m in length or a downhill that does not exceed 10 m PHD.

311.2.4.3 TC (Total climb) represents a total of all climbs on the course.

311.2.5 Norms for Cross-Country courses.

The HD, TC and MC of the homologated competition courses should be within the following norms:

Course distance	HD	MC	TC
Sprint F	max. 50m	0 – 30 m	0 – 60 m
Sprint C	max. 50m	10 – 30 m	20 – 60 m
2.5 km	max. 50m	30 – 50 m	75 – 105 m
3.3 km	max. 65m	30 – 65 m	100 – 135 m
3.75 km	max. 80m	30 – 80 m	100 – 150 m
5 km	max. 100m	30 – 80 m	150 – 210 m
7.5 km	max. 125m	30 – 80 m	200 – 315 m
8.3 km	max. 125m	30 – 80 m	210 – 350 m
10 km	max. 125m	30 – 80 m	250 – 420 m
15 km	max. 150m	30 – 80 m	400 – 630 m
longer than 15 km	max. 150m	30 – 80 m	

311.2.6 Course width categories

Course widths for particular competition formats should follow the following table:

Category	**Minimum course width**			**Used for**
	Uphills	**Undulated terrain**	**Downhills**	
A	3 m	3 m	3 m	Interval start C
B	4 m	4 m	4 m	Interval start F Relay C
C	6 m	6 m	6 m	Mass start C Skiathlon C part Pursuit C Relay F Sprint C Team sprint C
D	9 m	7,5 m	6 m	Mass start F Skiathlon F part Pursuit F Sprint F Team sprint F
E	12 m	9 m	9 m	Skiathlon (both techniques on the same course)

311.2.6.1 It is possible to use a lower category course for a particular format at COC or FIS level competitions providing it is approved by the TD. The number and level of competitors must be considered.

311.2.7 At OWG, WSC, JWSC and WC competitions, the highest point of a Cross-Country course should not exceed 1800 m.

311.2.8 For COC and FIS level competitions, courses with a minimum MC of 25 m and/or highest point above 1800 m can be homologated.

311.3 Preparation of the Course

311.3.1 Pre-Season Preparation

The courses must be prepared before the winter so that they can be raced even with very little snow. Rocks, stones, roots, stumps, brush and similar obstacles should be removed. Sections of the course that have drainage problems must be corrected. The summer preparations should be of a standard which allows for carrying out of competitions with approximately 30 cm of snow. Special attention must be given to downhill sections and the need for banking the curves.

311.3.2 General Preparation for the competition

311.3.2.1 The course should be completely prepared with mechanical equipment. If heavy machines are used, they should follow the original configuration of the ground as much as possible in order to preserve the undulations of the terrain.

311.3.2.2 The course must be prepared to the recommended width according to the Homologation Manual and the competition format (see ICR articles section C). The course must be prepared so that competitors can ski and pass unobstructed. On slopes where the courses traverse, they must be wide enough to allow for good preparation.

311.3.2.3 The courses and the warm up tracks must be completely prepared before the official training, correctly marked and with the kilometer signs in place..

311.3.2.4 The same conditions must be ensured for all competitors during the competition. If it is snowing or blowing hard, a sufficient number of qualified forerunners and/or especially equipped patrols must be available and utilized in order to maintain constant conditions. An action plan has to be prepared in cooperation with the Jury.

311.3.2.5 All use of artificial means in order to improve the glide on the snow are forbidden. In special cases use of chemicals to prevent a soft surface is allowed.

311.3.3 Preparation for Classical Technique

311.3.3.1 The number of tracks will be decided by the Jury according to the length, the width, the profile of the course, the competition format and number of entries (see ICR articles section C).

311.3.3.2 The tracks should be in general set along the ideal skiing line of the competition course. The track is normally set in the middle of the course except through curves.

311.3.3.3 In curves there should only be set track where the skis can glide unrestrained in the set track. Where the curves are too sharp and the speed is

considered to be too high for the skier to stay in the track, the track should be removed. In curves the track is to be set close to the fence to avoid the possibility to ski between the track and the fence.

311.3.3.4 To decide the proper course preparation and track setting, the best competitors and highest possible speed must be taken into consideration.

311.3.3.5 The ski tracks must be prepared so that ski control and gliding are possible without a lateral braking effect by any parts of the bindings. The two tracks should be set 17-30 cm apart, measured from the middle of each track. The depth of the track should be 2-5 cm, even in hard or frozen snow.

311.3.3.6 Where two or more tracks are used, they should be a minimum 1.20 meter apart measured from the middle of each pair of tracks.

311.3.4 Preparation for Free Technique

311.3.4.1 The course must be well-packed the entire width. The width of the course should be suitable with the competition format (see ICR articles section C).

311.3.4.2 The Jury determines where and how tracks will be set in the downhills.

311.4 Marking the Course

311.4.1 The marking of the course must be so clear that the competitor is never in doubt where the course goes. At OWG and WSC the colors of the markings have to be determined and described in the course descriptions.

311.4.2 Kilometer signs should mark the accumulated distance skied along the course.

311.4.3 Forks and intersections on the course must be clearly marked by visible signage, and fences or V-boards must be placed across unused parts of the course.

311.5 Refreshment Stations

311.5.1 The OC must at a minimum provide a refreshment station (in the finish area).

311.5.2 The Jury decides on positions or limitations on feeding stations on the competition course.

311.6 Course Protection

311.6.1 At OWG, WSC, JWSC and WC competitions the courses should be fenced along both sides at all places where spectators can potentially interfere with the competitors.

311.7 Training and Inspection of the Course

311.7.1 Competitors and team officials must be given the opportunity to train and inspect the course in competition conditions. When possible, the course should be open two days before the competition. The Jury may close the course or limit the use of the course to certain sections or hours.

312 The Cross-Country Stadium

312.1 Stadium Area

312.1.1 A Cross-Country stadium has to be prepared with a well-designed start/finish area.

312.1.2 The stadium arrangement should provide a functional entity divided and controlled as necessary by gates, fences and marked zones. It must be prepared in such a way that
- the competitors may pass through it several times,
- competitors, officials, media, service people and spectators may reach their respective areas easily,
- there is enough space to carry out all competition formats.

312.2 Start Zone

312.2.1 The first 50 m will be the start zone. This zone may be separated into corridors and classical tracks may be set. The number, width and length of corridors will be determined by the Jury according to the competition formats (see ICR articles section C) and the stadium layout.

312.2.2 The starting positions will be set according to the competition formats (see ICR articles section C).

312.3 Finish Zone

312.3.1 The last straight 50 to 100 m will be the finish zone. This zone is normally separated into corridors. They must be clearly marked and highly visible but the markings must not interfere with the skis. The corridors should be as long as possible. The number, width and length of corridors will be determined by the Jury according to the competition formats (see ICR articles section C) and the stadium layout.

312.3.2 The finish line must be clearly marked with a colored line. The width of the finish line is maximum 10 cm.

312.3.3 A control line is marked 10-15 meters after the finish line. Competitors are not allowed to take off their skis until after the control line (article 206.5). Violations will be reported to the Jury.

312.4 Exchange zone

312.4.1 In team events, the exchange zone should be sufficiently wide and long, clearly marked and located on flat or smoothly rising ground in the stadium.

312.4.2 The size (length and width) should be adapted to the competition formats (see also ICR articles section C) and the available space in the stadium.

312.5 Pit boxes

312.5.1 When ski exchange is allowed, the pit box area must be designed so that each competitor has a designated box marked by his/her bib number and an exit is provided that minimizes any chance for interference. A bypass corridor must be provided so that any competitors who do not enter their pit boxes will have the shortest skiing distance past this ski exchange area.

312.6 Working Conditions

312.6.1 Competition officials, Jury members, Coaches, media and service people must have proper working zones within the stadium area so that they can work without disturbing the process of start and finish. The access of these persons to the stadium area must be controlled.

312.6.2 Timekeeping and calculation should be located in a building with a good view of the start and finish.

312.6.3 At OWG, WSC, JWSC, WC and COC competitions, FIS Officials and Jury members must be provided a working room with a good view of the stadium, and in the immediate vicinity of the stadium.

312.6.4 A heated room must be provided for the medical office near the stadium.

312.7 Additional Facilities

312.7.1 In the immediate vicinity of the stadium at OWG, WSC, JWSC and WC a controlled (with fences or manual control) team preparation area with wax cabins and space for wax trucks must be installed. The cabins must be heated and well ventilated using forced air exchangers. Additional rules may apply for OWG, WSC, JWSC and WC.

312.7.2 Toilets and wash rooms must be installed for competitors near the stadium. They must be easily reached from the start area.

312.8 Current Information Facilities

312.8.1 A notice board showing results, important information from the OC and the Jury, and the air and snow temperature should be located close to the wax cabins and the stadium. The temperatures must be displayed for the following times: two hours before the start, one hour before the start, half an hour before the start, at the start, half an hour after the start, one hour after the start.

312.8.2 Temperature measurements must be taken in the stadium area and at places where extreme temperatures (low point, high point) can be expected.

312.8.3 Loudspeakers must be used for announcing the competition and important information.

312.8.4 In order to inform international competitors, trainers, spectators, English language must be used.

313 Official Entries for the Organiser

313.1 Procedure

313.1.1 Official entry forms must be sent by the Organiser to all relevant Nations in an electronic or paper form. An online registration process can also be provided.

313.1.2 As a minimum, the required data fields shown in the Official FIS Entry Form must be included.

313.1.3 For WC this entry process will be determined by the FIS Cross-Country Committee.

313.2 Receiving official entry information for a specific competition

313.2.1 Official entries and grouping information (when required) must be received and checked by the competition secretary latest two hours before the Team Captains' meeting.

313.2.2 If grouping will be used to determine the starting order, then the competition secretary will use the order of the written entry to assign the competitors into groups unless other specific instructions are provided.

313.2.3 When the starting order will be determined according to the FIS Points, the Competition Secretary will be required to compile the current point values for each competitor within the valid points list.

313.3 Late Entries

313.3.1 Late entries can be admitted by the Jury before the draw.

313.3.2 Late entries are not admitted after the draw.

313.4 Substitution

313.4.1 After the draw a competitor can only be substituted if he cannot start due to force majeure (injury, illness, etc.) and if the Jury permits the substitution. This has to be certified by a medical doctor and communicated to the Jury until 2 hours before the start.

313.4.2 In the event of an accident during warming up the Jury can permit a substitution later than 2 hours before the start if the accident is reported to and certified by the Chief of medical and rescue service of the OC.

313.4.3 If the withdrawn competitor was selected for doping control then this test must still be carried out and must also be carried out on the substitute competitor. If the withdrawn competitor produces a positive test, no substitute will be allowed.

313.4.4 The starting position of the substitute competitor will be according to ICR articles section C „competition formats"

313.4.5 Competitors, who are on the starting list and cannot take part in the competition because of illness or other reasons, must be reported by the team captain to the competition secretary at latest 30 min. before the start. If any of these competitors were selected for doping control, they must still be tested.

313.5 Grouping

313.5.1 If grouping is used to determine the starting order, the Team Captain must distribute his/her competitors evenly within the groups. This must be done latest 2 hours before the draw. If a nation enters more competitors than there are groups, the extra competitors must be distributed among the groups, one per group, at the option of the Team Captain. This rule also holds for teams with fewer competitors than groups.

Example:

Teams:		Groups:			
		I	II	III	IV
Team A	8 entries	2	2	2	2
Team B	6 entries	1	2	1	2
Team C	3 entries	1	-	1	1

313.5.2 With 20 competitors or less, use groups I and II; with 21 - 40 competitors, use groups I, II and III; with more than 40 competitors, use all four groups.

314 Starting Order

314.1 Principles

314.1.1 The start list can be created with a draw, using a point system, a cup standing, a stage event overall standing, a qualification system or other methods.

314.2 Draw

314.2.1 Manual and computer methods are allowed for the draw.

314.2.2 The draw is carried out by using a random double selection.

314.2.3 If grouping is used, the start numbers will be drawn within each group. The normal starting order of the groups will be I, II, III and IV. The grouping of the competitors cannot be changed during the draw.

314.2.4 If a competition has to be postponed to a different date, the draw must be repeated (article 217.6).

314.2.5 It is possible to have the draw conducted before the Team Captains‘ Meeting under the supervision of the Jury.

314.3 Manual Draw

314.3.1 In this method, each competitor receives one number from a sequence determined by the number of competitors in his group (for instance, 23 competitors in the group, the competitor is assigned a number between 1 and 23). In the first random selection, one of the numbers 1-23, is drawn. At the same time, a start number that has been assigned to that group is drawn (for example, group II with 23 competitors will race with bibs 45-67 inclusive). This number that is drawn is the start number for the competitor whose number was drawn in the first random selection. For both random selections, balls with the appropriate numbers on them are usually drawn by hand from a closed box or container. After the two balls are drawn, the nameplates of the competitors are transferred from the board with the grouping to the board with the starting order.

314.4 Computer Draw

314.4.1 The computer draw procedures must be inspected by a member of the Jury in order to validate the process.

314.4.2 This method requires that the names and the grouping of the competitors will be entered into the computer. The programme provides at least four stages of output on the monitor.

1. The list with the registered competitors and their sequential numbers within a group appears on the monitor.
2. The computer randomly selects the name of one competitor and displays it on the monitor.
3. The computer randomly selects a start number for this competitor. The start number and the name of the competitor now appear on the monitor.
4. The monitor then shows the start list order with this competitor listed.

314.5 Using a Points System to Determine the Starting Order

314.5.1 The starting order can be made on the basis of the FIS Points; overall list, distance list or sprint list.

314.5.2 Refer to the Rules and Guidelines of the FIS Points to determine valid lists.

314.6 Seeded Group

314.6.1 The Seeded Group is an exception and is composed of the best athletes entered in a competition. The seeded group can be determined according to the FIS Points, to a current Cup Standing or a current stage event standing.

314.6.2 At OWG, WSC and WC, the Seeded Group is defined as the top 30 competitors in the current World Cup Standing (distance or sprint). The current Overall WC Leader is added as one additional if not already included. No men or ladies within the ranking of top 30 will be substituted if they are not entered.

314.6.3 All competitors who are eligible to be in the Seeded Group must start the competition within the Seeded Group.

314.6.4 The starting position of the seeded Group will be determined for each different competition formats by the Jury according to the specific competition rules. As a principle, the seeded Group should start with the most advantageous position.

314.7 Bibs (Start Numbers)

314.7.1 Design

Bibs must be readable from the back and the front. They must not hinder the competitor in any way. The size, the shape and the method of attachment cannot be changed. The Organiser is responsible for obtaining practical bibs. Bibs used in sprints and in competitions with handicap start and mass starts should also have numbers on both sides under the arms; this is also possible for other competitions.

314.7.2 Leg Numbers

314.7.2.1 For Mass Start, Skiathlon, Pursuit, Individual Sprints competitions it is required to affix bibs to the competitor’s leg that is closest to the finish line camera.

314.7.2.2 For Team Sprint and Relay competitions it is required to affix bibs to the finishing competitor's leg that is closest to the finish line camera.

315 Start Procedures

315.1 Types of Starts

315.1.1 For competitions on the International Ski Calendar, interval start, mass start, handicap start, and heat start will be used.

315.2 Interval Start Procedure

315.2.1 Interval starts will normally use half-minute intervals and fifteen seconds for sprint qualifying round. The Jury may approve shorter or longer intervals.

315.2.2 The start command consists of a countdown starting 5 seconds before the start time ("5-4-3-2-1") and start signal ("GO!"). The command can be given verbally or by audible signals.

315.2.3 The competitor must have his feet behind the start line and remain stationary before the starter gives starting commands. The poles remain stationary and must be placed in front of the starting line and/or starting gate.

315.2.4 The competitor may start any time between three seconds before and three seconds after the start signal. If he/she starts more than three seconds before the start signal, it is a false start. If he/she starts more than three seconds after the start signal, it is late start and the start list time will count.

315.2.5 A competitor who starts late must not interfere with the start of others.

315.2.6 With both electric and hand-timing, the competitor's actual start time must be noted in case the Jury decides his late start was due to force majeure.

315.3 Mass Start Procedure

315.3.1 The mass start should be carried out using angled start lines in shape of an arrow. This means that the athlete with start number 1 has the most favorable start position followed by start number 2 etc. Each competitor should be separated by a fixed distance interval.

Number one will be in the middle position; even numbers are placed on the right and odd numbers on the left side of the arrow. The numbering mark should be placed to the right or in the middle of the track.

315.3.2 The starting procedures for a Mass Start will begin two minutes before the start signal. At this time instructions about the start will be given to all competitors assembled in their start lanes. These instructions should end with the competitors being instructed to stand at their start positions and a **"one minute to start warning"** is given. Next there will be the command **"30 seconds to start".** When all competitors are motionless then the next sound will be the **start command or signal**.

315.4 Handicap Start Procedure

315.4.1 The starting order and intervals are set according the results of a first competition or a stage event current overall standing. The tenths of seconds will be deleted to establish the start list.

Rank	Name	Country	Final
1	SVENSSON, Lars	SWE	25:12.9
2	ARKJANOW, Nikolai	RUS	25:14.2
3	KRECEK, Jan	CZE	25:21.7

The start list should be prepared according to the following example:

Start number	Name	Country	Start time
1	SVENSSON, Lars	SWE	0:00
2	ARKJANOW, Nikolai	RUS	0:02
3	KRECEK, Jan	CZE	0:09

315.4.2 In order to avoid overlapping or competition taking too long, the Jury may allow a mass or heat start for the late starting competitors. The Jury is also allowed to reduce the number of starting competitors.

315.4.3 The handicap start is carried out without an electronic start gate. A video camera should be used to record the entire start such that a review by the Jury can be done.

315.4.4 In order to guarantee an exact start, a large display clock must be used for each starting lane together with bib number and starting times for respective competitors for that lane. The start must be prepared so that two or more competitors may start side by side.

315.5 Heat Start procedure

315.5.1 The start area is prepared with a start line and a pre-start line that are 1 meter apart.

315.5.2 Electronic and/or mechanical start gates can be used if approved by the Jury.

315.5.3 Competitors are organised on the pre-start line where instructions are given and start lanes designated. The starter gives the command "**take your start positions**" and the competitors advance to the start line and take a "set" position. When all competitors are in their set positions the starter will give the command "**Set**". After the set command is given, all competitors must remain motionless and in their "set" position. After approximately 2-5 seconds from when the set command is given the starter gives the **start signal**.

315.5.4 Starts that do not use gates follow the same principles and procedures as stated above.

315.6 Duties of the Start Officials

315.6.1 Start officials must provide all competitors with the opportunity to start at their correct times. An assistant must be placed near the starter and is responsible for recording the details for any violations at the start.

315.7 False Start Consequences

315.7.1 For competitions using interval start or handicap start procedures a competitor who makes a false start will not be recalled to the start line. False start infractions must be reported to the Jury.

315.7.2 For all competitions using a mass start or heat start procedure, any false start will result in a “restart” of the competition. The starter is required to give a restart signal (second shot) and must have assistants placed an effective distance down the tracks where it is possible to turn the competitors back.

315.8 Marking of Skis

315.8.1 Ski marking will not be used unless requested in advance by the sanctioning body of the competition. For purposes of control, both skis are marked shortly before the start. The competitor must come to the official marking place in person and in due time wearing his starting bib.

315.9 Temperature

If the temperature is below -20° C, measured at the coldest point of the course, a competition will be postponed or cancelled by the Jury. With difficult weather conditions (e.g., strong wind, high air humidity, heavy snowfall, or high temperature) the Jury may, in consultation with the Team Captains of the participating teams and the Chief of medical and rescue service responsible for the competition, postpone or cancel the competition.

316 Timing

316.1 For all competitions listed in the FIS Calendar, electronic timekeeping must be used. Electronic timing will always be supplemented by hand-timing as a backup system and the results cross-checked between the two systems.

316.2 If the electronic timing temporarily fails hand times will be used by correcting the average time difference which develops between the electronic timing and the hand-timing. If the electronic timing fails frequently or completely during the competition, the hand times will be used for all the competitors. When hand times are used to calculate results, the actual start times must be used.

316.3 When using hand-timing, the time is taken when the competitor's first foot crosses the finish line.

316.4 Electronic Timing

316.4.1 The following electronic timing technologies can be used to identify the official finish times:

- Electronic timing system based on photo cells. The measuring point of the light or photo barrier must be at a height of 25 cm above the snow surface.
- Electronic timing system based on transponders.
- Photo finish system. The measuring point will be the toe of the first boot meeting the finish line.

316.5 In the case of competitors falling as they cross the finish line, the competitors will be assigned their finish time as per articles 316.3 or 316.4 if all the parts of their bodies are moved across the finish line without any outside assistance.

316.6 For the calculation of results all start and finish times will be recorded to at least 1/100 (0.01) precision. The calculated net time for each competitor is determined by subtracting the recorded start time from the recorded finish time. The final result for each skier will be determined to 1/10 (0.1) precision by truncating the calculated net time. For example, 38:24.38 becomes 38:24.3.

316.7 During the OWG, WSC, JWSC and WC, photo finish cameras must be used.

316.8 The finish referee is responsible for keeping a list of the order in which the competitors cross the finish line. He gives this list to the chief of timekeeping and data processing.

317 Results

317.1 Calculation of Results

317.1.1 The results are calculated by taking the difference between the finish and start times. In a stage event competition, the actual time, bonus seconds and time penalties from each stage are accumulated.

317.1.2 The ranking of athletes involved in a photo finish will be established according to the order they crossed the vertical plane of the finish line by the toe of the front foot.

317.2 Publication of Results

317.2.1 The unofficial result list will be posted on the official notice board as soon as possible after the competition, with the time of its publication noted.

317.2.2 The official result list must contain the final order of the competitors, their FIS Codes, starting number, times, intermediate times and competition points. Skiing technique, the number of competitors, names of the competitors who started but did not finish, any disqualified competitors, the technical details of the course; length, HD, MC, TC, the weather, temperature data, and the composition of the Jury.

Examples can be found on the FIS Website Cross-Country and through the FIS Nordic Office.

317.2.3 In countries where the Latin alphabet is not used, information and results should also be given in Latin characters.

317.2.4 The competition secretary and the TD sign the official result list and certify that it is correct.

C. Competition Formats

321 Interval Start Competitions

321.1 Definition

At interval start competition, each competitor starts at his/her designated starting time and final result is determined by difference between finish time and start time.

321.2 Courses and stadium

321.2.1 Recommended Norms

Items	Preparation for	
	Classical technique	**Free technique**
COURSE		
Category	A	B
Classical tracks	1 or 2 tracks in ideal line	/
Distance between tracks	Minimum 1.2 m	/
START		
Organisation/preparation	1 corridor	1 corridor
Classical tracks	1	No
Length of tracks (after start line)	end of start zone	/
Distance between tracks	/	
FINISH		
Width (minimum)	4 m	9 m
Number of corridors	3 tracks	3 corridors (3 m each)
Distance between tracks	1.2 m	/

321.3 Entries - Substitution

321.3.1 Substitution is possible according to ICR art. 313.4.

321.3.2 The substitute athlete's start position will be determined by the Jury.

321.4 Starting Order and Start Procedure

321.4.1 Interval start procedure must be used (see ICR art. 315.2)

321.5 Timing and results

321.5.1 If two or more competitors have the same time, they shall have the same ranking in the result list, and the competitor with the lower starting number will be listed first (article 219.2).

321.6 Jury and protests

No specific rules

322 Mass Start Competitions

322.1 Definition

At mass start competitions, all athletes start at the same time and final results are determined by finish arrival order.

322.2 Courses and stadium

322.2.1 Recommended norms

Items	Preparation for	
	Classical technique	**Free technique**
COURSE		
Category	C	D
Classical tracks	4 tracks	/
Distance between tracks	Minimum 1.2 m	/
START		
Organisation/preparation	Arrow start grid	Arrow start grid
Classical tracks	Odd number 5 or 7	Odd number 5 or 7
Length of tracks (after start line)	50 to 100 m	30 to 50 m
Distance between tracks	Minimum 1.2 m	Minimum 1.2 m
FINISH		
Width (minimum)	6 m	12 m
Number of corridors	4 tracks minimum	4 corridors (3 m each)
Distance between tracks	1.2 m	/

322.2.2 There must be no factors along the course that cause congestion.

322.2.3 If ski exchange is allowed, the stadium must be organised in a way that athletes going to exchange skis will ski longer distance comparing to athletes that will not change skis.

322.3 Entries - Substitution

322.3.1 Substitution is possible according to ICR art. 313.4.

322.3.2 The substitute athlete’s start position will be determined by the Jury, using the same procedure that established the start list. The athlete's start position will be in between the starting positions (lines) of the competitors adjacent to him.

322.3.3 The athlete takes the bib of the one he is replacing.

322.3.4 The original start position will be left empty.

322.4 Starting Order and Start Procedure

322.4.1 Mass Start procedure must be used (see ICR art. 315.3).

322.5 Timing and Results

322.5.1 Overlapping Rules normally apply. For skiers who are lapped refer to ICR article 343.13.

322.6 Jury and protests

No specific rules.

323 Skiathlon

323.1 Definition

Skiathlon is a combined competition of a mass start in classical technique in first part, followed by mandatory ski exchange in a pit box in the stadium and then second part in free technique.

323.2 Courses and stadium

323.2.1 Recommended norms

Items	Preparation for	
	Classical technique	**Free technique**
COURSE		
Category	C or E	D or E
Classical tracks	4 tracks	/
Distance between tracks	Minimum 1.2 m	/
START		
Organisation/preparation	Arrow start grid	/
Classical tracks	Odd number 5 or 7	/
Length of tracks (after start line)	50 to 100 m	/
Distance between tracks	1.2 m	/
FINISH		
Width (minimum)	/	12 m minimum
Number of corridors	/	4 corridors (3 m each)
Distance between tracks	/	/
PIT BOXES		
Recommended size	length 2 m – 2.5 m	width 1.2 m – 1.5 m

323.2.2 Pit Box area

323.2.2.1 Within the exchange box area there is no technique control.

323.2.2.2 The course along the access to the boxes must be a minimum of 4 m wide. The course on the exit side of the boxes must be a minimum of 6 m wide.

323.2.2.3 The free technique equipment must be deposited into the assigned box before the mass start. Other equipment is not allowed to be deposited in the boxes.

323.2.2.4 All equipment exchanges must be done by the competitor within the assigned box without any assistance. The exchanged equipment must be left in the box until the competitor has finished the competition.

323.2.2.5 5 minutes before the start coaches or service people have to leave the exchange box area.

323.3 Entries - Substitution

323.3.1 Substitution is possible according to ICR art. 313.4

323.3.2 The substitute athlete's start position will be determined by the Jury, using the same procedure that established the start list. The competitor's start position will be in between the starting positions (lines) of the competitors adjacent to him.

323.3.3 The athlete takes the bib of the one he is replacing.

323.3.4 The original start position will be left empty.

323.4 Starting Order and Start Procedure

323.4.1 Mass Start procedure must be used (see ICR art. 315.3).

323.5 Timing and results

323.5.1 Overlapping Rules normally apply. For skiers who are lapped refer to ICR article 343.13.

323.6 Jury and protests

No specific rules.

324 Pursuit

324.1 Definition

Pursuit competitions are carried out as combined competitions where starting times of athletes are determined by result(s) of previous competition(s) and the final result is determined by finish arrival order of the last competition.

324.2 Courses and stadium

324.2.1 Recommended norms

Items	Preparation for	
	Classical technique	**Free technique**
COURSE		
Category	B	C
Classical tracks	4 tracks	/
Distance between tracks	Minimum 1.2 m	/
START		
Organisation/preparation	2 – 5 corridors	2 – 5 corridors
Classical tracks	1 per corridor	1 per corridor
Length of tracks	End of start zone	10 m

(after start line)		
Distance between tracks	3 m	3 m
FINISH		
Width (minimum)	6 m minimum	12 m minimum
Number of corridors	4 tracks minimum	4 corridors (3m each)
Distance between tracks	1.2 m	/

324.3 Entries – Substitution

324.3.1 Substitution according to ICR 313.4 is only possible before the first part of Pursuit competition.

324.4 Starting Order and Start Procedure

324.4.1 Handicap start procedure must be used (see ICR art. 315.4).

324.5 Timing and Results

324.5.1 The calculation of the final times in a pursuit competition will be done by combining the results (actual skiing time) in the previous race without the tenths of a second with the final results of the second race with the tenths of a second. For competitors that use the handicap start method the order of finish determines the final ranking.

324.5.2 Overlapping Rules normally apply. For skiers who are lapped refer to ICR article 343.13.

324.5.3 Under difficult weather conditions the Jury may decide to postpone the start or to cancel the competition. If it is cancelled the result from the first part of the competition will count as the final result.

324.6 Jury and protests

No specific rules.

325 Individual Sprint Competitions

325.1 Definition

Individual sprint competitions begin with a qualification round, organised as an interval start competition. After the qualification, qualified athletes compete in the sprint finals using elimination rounds (sprint heats).

325.2 Courses and stadium

325.2.1 Recommended Norms

Items	**Preparation for**	
	Classical technique	**Free technique**
COURSE		
Category	C	D
Classical tracks	4 tracks	/
Distance between tracks	Minimum 1.2 m	/
START		
Organisation/preparation	Extra corridor for qualification round,	Extra corridor for qualification round,

Items	Preparation for	
	Classical technique	**Free technique**
	6 corridors / gates for sprint heats	6 corridors / gates for sprint heats
Classical tracks	1 per corridor	1 per corridor
Length of tracks (after start line)	End of start zone	15 m
Distance between tracks	1.8 m	1.8 m minimum
FINISH		
Width (minimum)	6 m minimum	12 m minimum
Number of corridors	4 tracks minimum	4 corridors (3 m each)
Distance between tracks	1.2 m	/

325.2.2 The course used for the qualification round and the course used for the Finals heats should be the same.

325.2.3 Sections of the course must be designed straight, wide and long enough to make overtaking possible.

325.3 Entries – Substitution

325.3.1 Substitution is possible before qualification according to ICR art. 313.4

325.3.2 The substitute athlete's start position will be determined by the Jury.

325.4 Starting Order and Start Procedure

325.4.1 Qualification

325.4.1.1 Interval Start procedure must be used (see ICR Art. 315.2). Start intervals can be 10, 15, 20 or 30 seconds.

325.4.1.2 If two laps are used an interval block start can be used.

325.4.1.3 In case of equal qualification times, the competitors who will be advancing to the quarterfinals will be ranked according to their FIS sprint points on the qualification results. The tie in qualification results will not change maximum number of qualified competitors (30 / 24 / 16).

325.4.2 Finals Heats (Quarterfinals, Semi-finals and Finals)

325.4.2.1 Heat Start procedure must be used (see ICR Art. 315.5)

*325.4.2.*2 In OWG, WSC, WC heats will include quarterfinals, semi-finals and the A-Final. In other competitions the heats will be decided by the organiser including the addition of a B-Final.

325.4.2.3 The starting positions are chosen by the athletes according to the following order:

- Quarterfinals: qualification times (rankings) are used
- Semi-finals: rankings from the Quarterfinals and qualification times are used
- Finals: rankings from the Semi-finals and qualification times are used.

325.4.2.4 The assignment of competitors to quarterfinal heats is determined from the finish rankings in the qualification round. Positions in subsequent heats are also assigned based on rankings or times in the previous round of

heats. The table below illustrates the principle of allocating the competitors to their heats when the heats are not timed.

325.4.2.5 Table A: quarter finals with 6 competitors in 5 heats

TABLE A Quarterfinals with 6 competitors in 5 Heats, maximum 30 advance					
Assigned to heats	**Q1**	**Q2**	**Q3**	**Q4**	**Q5**
Distribution 1 – 20	1	4	5	2	3
	10	7	6	9	8
	11	14	15	12	13
	20	17	16	19	18
Distribution 21 – 25	21	24	25	22	23
Distribution 26 – 30	30	27	26	29	28

Semi Finals (12)		Finals (6 + 6)	
S1	S2	B Final	A Final
Q1 #1	Q4 #1	S1 #4	S1 #1
Q1 #2	Q4 #2	S2 #4	S2 #1
Q2 #1	Q5 #1	S1 #5	S1 #2
Q2 #2	Q5 #2	S2 #5	S2 #2
Q3 #2	Q3 #1	S1 #6	S1 #3
R3-1*	R3-2*	S2 #6	S2 #3

* In competitions when the heats are not timed, the 6th positions in the semi-final heats are assigned from the 3rd ranked competitors in all the quarter final heats. The 3rd ranked competitor with the fastest qualifying time (Q R3-1) is assigned to the first semi-final heat S1 and the 3rd ranked competitor with the second best qualifying time (Q R3-2) is assigned to S2.

325.4.2.6 Or using Table B: quarter Finals using 4 heats

TABLE B Quarter Finals using 4 Heats, maximum 24 advance				
Assigned to heats	**Q1**	**Q2**	**Q3**	**Q4**
Distribution 1 – 16	1	4	2	3
	8	5	7	6
	9	12	10	11
	16	13	15	14
Extended Distribution 17 – 20	17	20	18	19
Extended Distribution 21 – 24	24	21	23	22

Table B continued			
Semi Finals (8)	Finals (4 + 4)		
S1	S2	B Final	A Final
Q1 #1	Q3 #1	S1 #3	S1 #1
Q1 #2	Q3 #2	S1 #4	S1 #2
Q2 #1	Q4 #1	S2 #3	S2 #1
Q2 #2	Q4 #2	S2 #4	S2 #2

325.4.2.7 For OWG, WSC, JWSC and WC the heats must be timed and the assignment of competitors into the semi-final heats and the A-Final is according to the following principles:

For the 6th positions in the semi-final heats the next two fastest competitors from the quarterfinal heats who are ranked 3rd or 4th will be advanced. The fastest will be assigned to S1 and the next fastest to S2. For the A-Final the 1st & 2nd ranked competitor from each Semi-final heat are assigned to the A-Final plus the next 2 fastest competitors from either Semi-final heat who are ranked 3rd or 4th will also be assigned to the A-final, all other Semi-finalists are assigned to the B-Final.
In case of equal times in the heats for positions 5 and 6 (lucky losers), their qualification times will apply. If the tie still remains current sprint FIS Points will apply; if a tie still remains, then the positions are determined by a draw.

325.4.2.8 In sprint competitions with less than 20 competitors in the Qualification Round the Jury can decide to use a reduced version of Table A or they can assign competitors directly into the Semi-finals or the A-Final.

325.4.2.9 False starts due to an error by a competitor or due to a mechanical failure of the start gate may be declared by the starter. Following the first false start in a heat, any competitor who causes a subsequent false start in the same heat will be required to withdraw from the competition. The competitor will be ranked at the last position of these finals, semi-finals or quarter finals (rank 6, 12, 30 or 4, 8, 16).

325.5 Timing and results

325.5.1 For OWG, WSC, JWSC and WC sprint qualifying round and heats, start and finish times are recorded to 1/1000 precision and the final result is determined to 1/100 precision. For other FIS sprint competitions it is possible to use timing equipment that only has 1/100 precision but still the final results report the hundredths of a second.

325.5.2 Qualification

325.5.2.1 In case of equal qualification times, the competitors who will be advancing to the quarterfinals will be ranked according to their FIS sprint points on the qualification results. Competitors with the same qualification time who did not advance to the quarterfinals will have the same ranking on this result list.

325.5.3 Final heats

325.5.3.1 Competitors with the same rank in the quarterfinals or semi-finals (if there is no B-final) who do not reach the next round are ranked according their qualification times in the final results.

325.5.3.2 In sprint competitions with 30 competitors to the quarterfinal the result list will be made as follows:

31st to last rank,	the results from the qualification round will be used
26th – 30th rank,	the 6th place finisher from each heat in the quarter-final will be assigned based on their respective ranking in the qualifying round
21st – 25th rank,	the 5th place finisher from each heat in the quarter-final will be assigned based on their respective ranking in the qualifying round
16th/17th - 20th rank,	the 4th place finisher from each heat in the quarter-final will be assigned based on their respective ranking in the qualifying round (Exception, if one of those 4th place finishers will advance to the semi final)
13th – 15th/16th rank,	the 3rd place finisher from each heat in the quarterfinal, who did not advance to the semi-finals will be assigned based on their respective ranking in the qualifying round
7th – 12th rank,	based on the order of finish in the B final in case of no B Final, the athletes are ranked according their ranking in semi-final and their qualification round
1st – 6th rank,	based on the order of finish in the A final

325.5.3.3 In sprint competitions with 16 competitors to the quarterfinal the result list will be made as follows:

- 17th to last rank	the results from the qualification round will be used
- 13th – 16th rank	the 4th place finisher from each heat in the quarter-final will be assigned based on their respective ranking in the qualifying round
- 9th – 12th rank	the 3rd place finisher from each heat in the quarterfinal will be assigned based on their respective ranking in the qualifying round
- 5th – 8th rank	based on the order of finish in the B final
- 1st – 4th rank	based on the order of finish in the A final

With a different number of competitors in the sprint finals the same principles apply.

325.5.3.4 In case of a tie ("dead heat") in quarterfinals or semi-finals, the competitor with the better qualification time is ranked ahead. If there is a tie in the A or B finals the competitors are ranked on the same place in the final results.

325.5.3.5 If the competitor does not start or ski the entire course in each heat, the competitor will be ranked in the last position of these finals, semi-finals or quarterfinals (rank 6, 12, 30 or 4, 8, 16).

325.5.3.6 If a competitor does not finish a heat due to force majeure he is ranked last in this heat.

325.6 Jury and Protest

325.6.1 In sprint heats at OWG, WSC, JWSC and WC the unanimous decision of minimum three Jury members (including TD) equates to a Jury decision.

325.6.2 Due to the timeline pressure of running successive heats it is not possible to allow protests during quarterfinals and semi-finals. Protests will only be accepted after the finals.

325.6.3 During quarter- and semi-finals, ICR 224.7 does not apply.

326 Team Sprint Competitions

326.1 Definition

Team Sprints are competitions carried out as relays with 2 athletes who alternately ski between 3 – 6 legs each. The numbers and distances of the legs have to be published in the official invitation.

326.2 Course and Stadium

326.2.1 Recommended Norms

Items	Preparation for	
	Classical technique	**Free technique**
COURSE		
Category	C	D
Classical tracks	4 tracks	/
Distance between tracks	Minimum 1.2 m	/
START		
Organisation/preparation	Arrow start grid	Arrow start grid
Classical tracks	Odd number 3 or 5	Odd number 3 or 5
Length of tracks (after start line)	End of start zone	15 m
Distance between tracks	1.2 m	1.2 m
FINISH		
Width (minimum)	6 m	12 m
Number of corridors	4 tracks minimum	4 corridors (3m each)
Distance between tracks	1.2 m	/
EXCHANGE ZONE		
Length	45 m	45 m
Width	9 m	15 m

326.2.2 Sections of the course must be designed straight, wide and long enough to make overtaking possible.

326.2.3 A ski preparation zone must be provided close to the exchange zone. The Jury decides on the number of service men per team and the use of waxing tables.

326.3 Entries – Substitution

326.3.1 The names of the competitors actually competing and their starting order must be delivered to the organiser latest 2 hours before the Team Captains' Meeting.

326.3.2 Substitution is possible according to ICR art. 313.4.

326.3.3 The substitute athlete must start in the same Team position as the substituted athlete. The Team's starting order cannot be changed.

326.3.4 If the substitute athlete was entered in another Team, then this Team can not start.

326.3.5 In case of substitution, the Team will lose its starting position and will have to start at the end of the field. The start order at the end of the field will be the same as the original starting order. The original start positions will be left empty.

326.4 Starting Order and Start Procedure

326.4.1 Mass Start procedure must be used (see ICR art. 315.3).

326.4.2 Normally 2 semi-finals (example: A, B) will be used to select the teams for the final in a team sprint competition. The teams should be evenly distributed among semi finals using the following principle:

- Best team by total points will be assigned to semi final A
- Remaining teams will be assigned in subsequent pairs by ranking (example team 2 and 3, team 4 and 5, etc.) to alternating semi finals.

326.4.2.1 In case the entered competitor does not have FIS Points or his FIS Points are higher than 160, 160 points will be used for calculation.

326.4.3 The number of teams in one semi-final heat should not exceed 15 and the number of teams in the final should not exceed 10.

326.4.4 Order of semi finals will be determined by draw.

326.4.5 Start position for the semi finals: the team with lowest total points using either sprint or distance FIS Points of the relay team members will start as number one. The team with the second lowest total points will start as number two and so on. In the case of more teams having equal total points, the team with the lowest point-holder starts ahead of the other. If this is not sufficient to determine the starting position, then starting position is drawn by lot.

326.4.6 The advancement of teams from the semi-final heats to the finals is done according to the following principles:

- If the semi-final heats are not timed, the top 5 teams from each of the 2 semi-final heats will advance.
- When the heats are timed, then the top 2 teams from each heat will advance and the next 6 fastest teams from the 3rd - 8th ranked teams will advance.

326.4.7 The start position for the finals will be according to the results from the semi-finals (rankings followed by times).

326.5 Timing and results

326.5.1 For OWG, WSC, JWSC and WC team sprint semi-finals and finals, start and finish times are recorded to 1/1000 precision and the final result is determined to 1/100 precision. For other FIS sprint competitions it is possible to use timing equipment that only has 1/100 precision but still the final results report the hundredths of a second.

326.5.2 Overlapping Rules normally apply. For teams/skiers that are lapped refer to ICR article 343.13

326.5.3 The final results will be published according to the following:

All teams in the final will be placed in the results list according to their rank in the final. When semi-final heats are used the teams who do not advance to the final round will be placed on the results list so that each team with the same rank in their heat will be given a ranking for the next available rank on the result list.

As an example if 5 teams from two semi-final heats advance to the final then the teams ranked 6th in each heat will be given the rank of 11th and 12th according to their time in their respective semi-final heats, the teams ranked 7th in each heat will be given a rank of 13th and 14th etc. in the final results.

326.6 Jury and Protest

326.6.1 In team sprints at OWG, WSC and WC the unanimous decision of minimum three Jury members (including TD) equates to the Jury decision.

326.6.2 Due to the timeline pressure of running successive heats it is not possible to allow protests during the semi-finals. Protests will only be accepted after the finals.

326.6.3 During semi-finals, ICR 224.7 does not apply.

327 Relay Competitions

327.1 Definition

327.1.1 The relay team consists of three or four competitors, according to the invitation, of whom each may run only one leg. At OWG, WSC, JWSC and WC competitions, a relay consists of four competitors.

327.1.2 In OWG, WSC, WC and JWSC the first two legs will be raced using the classical technique on a classical course and the second two legs using free technique on a free technique course.

327.2 Course and Stadium

327.2.1 Recommended norms

Items	Preparation for	
	Classical technique	**Free technique**
COURSE		
Category	B	C
Classical tracks	2 tracks	/
Distance between tracks	Minimum 1.2 m	/
START		
Organisation/preparation	Arrow start grid	Arrow start grid
Classical tracks	Odd number 5 or 7	Odd number 5 or 7
Length of tracks (after start line)	End of start zone	15 m
Distance between tracks	1.2 m	1.2 m
FINISH		
Width (minimum)	6 m	12 m
Number of corridors	4 tracks minimum	4 corridors (3 m each)
Distance between tracks	1.2m	/
EXCHANGE ZONE		
Length	30 m	30 m
Width	9 m	9 m

327.2.2 The length of the first relay leg can deviate +/- 5% from the other legs, according to the stadium layout.

327.3 Entries - Substitution

327.3.1 The names of the competitors actually competing and their starting order must be delivered to the organiser latest 2 hours before the Team Captains' Meeting.

327.3.2 Substitution is possible according to ICR art. 313.4.

327.3.3 The starting order cannot be changed by substitution.

327.3.4 If the substitute athlete was entered in another Team, then this Team can not start.

327.3.5 The Team starting position on the start grid will remain the same.

327.4 Starting order and Start Procedure

327.4.1 Mass start procedure must be used (see ICR art. 315.3).

327.4.2 Start numbers will normally be drawn. At OWG, WSC and JWSC the placing in the previous OWG, WSC or JWSC will determine the starting order. At WC, placing in the current Nation's Cup will decide the starting order. Teams which do not appear in those results will be drawn after those that did.

327.4.3 When each nation can enter more than one official team, the first team for each nation must be placed on the start grid before the second teams and likewise for the third teams etc. Unofficial teams should have the least favorable starting positions.

327.4.4 Colors: Separate colors shall be used for the start numbers for each relay leg. For OWG, WSC and WC competitions they will be: 1st leg=red; 2nd leg=green; 3rd leg=yellow and 4th leg=blue.

327.5 Timing and Results

327.5.1 Intermediate times for the individual legs of the course are taken when the competitor crosses the line for the intermediate timing. This is also the starting time for the next competitor.

327.5.2 The total time of a relay team is the time which elapses between the start and team's final competitor crossing the finish line. The order in which the competitors finish the last relay leg determines the result list.

327.5.3 Overlapping Rules normally apply. For teams/skiers that are lapped refer to ICR article 343.13

327.6 Jury and Protest

No specific rules.

D. The Competition and the Competitors

341 Requirements of the Competitors

341.1 Age Categories

341.1.1 The FIS competition year is July 1st - June 30th of the following year.

341.1.2 Seniors (ladies and men) must be at least 21 years old during the calendar year (01.01.-31.12.). The right to start begins with the beginning of the competition season (e.g. for 2014 from 1st July 2013 onwards).

341.1.3 Junior ladies and junior men must be no older than 20 during the calendar year (01.01.-31.12.).

Nordic Junior World Ski Championships

A competitor must have reached his 16th birthday before the end of the calendar year (1st January – 31st December) in question.

Season	Age	Years of birth
2013/14	16-20	1994, 1995, 1996, 1997, 1998
2014/15	16-20	1995, 1996, 1997, 1998, 1999

U23 ladies and U23 men must be no older than 23 during the calendar year (01.01.-31.12.). Years of birth for U23 from 2014 on:

U23 World Ski Championships Cross-Country

Season	Age	Years of birth
2013/14	21-23	1991, 1992, 1993
2014/15	21-23	1992, 1993, 1994

341.1.4 Junior ladies and junior men should normally start in their own classes. They may start in the respective ladies or men's classes.

341.1.5 At WC and WSC a competitor must have reached his 16th birthday before the end of the calendar year (1st January – 31st December) in question:

- WC 2013/14, competitors born 1998 and earlier
- WC 2014/15 and WSC 2015, competitors born 1999 and earlier
- WC 2015/16, competitors born 2000 and earlier

341.2 FIS Points System

341.2.1 The FIS Points are used particularly for establishing the qualification for OWG, WSC and World Cup competitions, grouping and start list creation (see: World Cup rules and Rules and Guidelines of the FIS Points available on the FIS Website).

342 Medical Examinations

342.1 State of Health

342.1.1 The National Associations are responsible for the health of the competitors they enter. The Chief of medical and rescue service will only carry out a medical examination at the request of the competitor's Team Captain, competitor or the representative of the FIS Medical Committee (see article 221).

343 Responsibilities of the competitors

343.1 In all training and competition situations the athlete must act with due care taking into account the course conditions, visibility and competitor congestion.

343.2 In all training and competition situations the athletes must always ski in the competition course direction.

343.3 Competitors must follow the instructions (course opening times, wearing bibs, training, ski testing, etc.) issued by the Jury or OC in order to ensure order on the course, in the stadium and in the team preparation area before, during and after the competition.

343.4 The competitor is responsible for arriving at the start and starting at the correct time.

343.5 If transponders or GPS are used it is mandatory for the competitors to wear these equipment.

343.6 Competitors must follow the marked course in correct sequence from start to finish and must pass all control points.

343.6.1 If a competitor skis on a wrong section or leaves the marked course, they must return to the point where they made the error. In order to do so, the competitor may have to ski against the correct ski direction and shall be totally responsible for ensuring that they do not obstruct or endanger other competitors. There will be no penalty for having committed the error as

long as no time / ranking advantage have been gained and there has been no interference with other competitors.

343.7 Competitors have to cover the whole distance on their skis using only their own means of propulsion. Help from pacemakers or pushing is not allowed.

343.8 In classical technique competitions, the competitors must use classical technique only.

343.9 In all competitions obstruction is not allowed. This behavior is defined as deliberately impeding, blocking (by not following best line), charging or pushing any competitor with any part of the body or ski equipment.

343.10 Overtaking

343.10.1 During an interval start competition a competitor who is being overtaken must give way on the first demand.

This applies in classical technique courses even when there are two tracks and in free technique courses when the skier being overtaken may have to restrict his/her skating action.

343.10.2 For all other competitions, when overtaking occurs, competitors must not cause any obstruction.

The responsibility for a correct passing without obstruction is on the overtaking skier. The overtaking skier must have his/her skis in front of the skis of the overtaken skier before skiing his/her best line.

343.11 In sections with marked corridors, the competitors must choose and ski within the chosen corridor. A competitor is allowed change corridors as long as the ICR 343.9 is upheld (except in start corridors where competitors are not allowed to change).

343.12 Equipment exchange

343.12.1 In all competitions poles may be changed.

343.12.2 Skis may be changed only if:

- The skis or bindings are broken or damaged. The equipment failure must be proven to the Jury after the competition.
- Equipment exchange boxes (pit boxes) are in place at the competition.

343.12.3 In the case of any ski exchange, the competitor must do it outside of the track without help from any other person.

343.12.4 When ski exchange boxes (pit boxes) are provided for long distance or Skiathlon competitions, the competitor is permitted to change skis inside the pit box one or more times. The maximum number of exchanges will normally be decided before Team Captains' meeting. It will be based on the course and lap length, but should be limited to:

- 3 times maximum at competitions up to 30 km
- 5 times maximum at competitions longer than 30 km
- 1 time maximum at Skiathlon competitions

343.12.5 When ski exchange boxes (pit boxes) are provided, overtaking along the access corridors to the boxes is only allowed on the side that is farthest from the boxes.

343.12.6 Waxing, scraping or cleaning of the competitor's skis during the competition is forbidden. Exception: In classical technique competitions competitors may scrape their skis to remove snow and ice, and add wax if necessary. Competitors may only be handed tools or materials and must do this outside of the track without help from any other person. It is not allowed to place branches, tools or materials on or adjacent to the groomed course.

343.13 Relay exchange

343.13.1 In a team event, the exchange is achieved by the arriving competitor, with a tap of the hand on any part of the next competitor's body while both competitors are in the relay exchange zone. The next competitor may only enter the relay exchange zone when summoned. Any method of pushing the starting competitor is forbidden.

343.14 Overlapping

343.14.1 In Pursuit competitions, Skiathlon, Mass start, Team Sprint and Relay competitions, competitors or teams, who are lapped or instructed by competition officials to stop the competition, must abandon the competition. In all competitions the competitors or teams will be ranked in the final results (no time) according to their ranking at their last intermediate timing point

343.14.2 ICR art. 343.13.1 must be applied for OWG, WSC and WC.

343.14.3 For all other FIS competition the Jury decides if ICR art. 343.13.1 applies.

343.15 Communication devices that support wireless communication between coaches and athletes or between athletes are not allowed during competition.

343.16 The competitors must comply with the instructions of competition officials.

343.17 The competitor must comply with all aspects of the medical code (see 221).

344 Responsibilities of Officials and Others

344.1 If required, the Jury will issue special regulations for officials, media and service people and any other non-competitors, to ensure order on the course, in the stadium and in the team preparation area before, during and after the competition.

344.2 For order and control on the courses the following principles apply:

- from 5 minutes before the start until the time the course closers have passed, all officials, coaches, non-competitors and other accredited persons, are not permitted to ski on the course. During the competition, these persons must take fixed locations beside the course and must stand without skis on.

- while giving intermediate times and information to competitors, officials, coaches and others are not allowed to run more than 30 meters beside the competitors
- while doing this work officials and others have to ensure not to obstruct competitors
- while giving refreshments to the competitors the coaches must ensure not to obstruct competitors and must maintain a fixed position.

344.3 In order to obtain clean TV coverage and for safety reasons parts of the competition course may be closed for all but the competitors taking part in the competition. The Jury can allow ski testing and warming up by competitors on parts of the competition course before and during the competition. Athletes and service personnel, wearing special bibs may be allowed to ski on these parts of the competition course.

344.4 Wax testing and warming up on the ski competition course must always be done in the competition course direction. Anyone testing skis on the competition course must consider the safety of others on the course and the course preparation. Electronic timing devices used for testing skis will not be allowed on the course during the competition or official training.

E. Not Permitted to Start, Sanctions

351 Not Permitted to Start

A competitor will not be permitted to start in any FIS international ski competition who:

351.1 wears obscene names and/or symbols on clothing and equipment (art. 206.7) or behaves in an unsportsmanlike manner in the start area (art. 205.5)

351.2 violates the FIS rules in regard to equipment (art. 222) and commercial markings (art. 207)

351.3 refuses to undertake a FIS required medical examination (art. 221.2)

351.4 If a competitor has actually started in a competition and is later determined by the Jury to have been in violation of these rules the Jury must sanction the competitor.

352 Sanctions

352.1 Procedure

When an infraction to the rules occurs, the Jury must meet and decide the appropriate sanction by taking into consideration:

- the specific circumstances
- the gain or advantage for the offender (see ICR art. 223.3.3)
- the negative impact on other competitors
- the impact on the final result or intermediate results (sprint heats or bonus sprints)

- the arguments from the athlete (see ICR art 224.7)
- the level of the competition
- the age and experience of the competitors
- the guidelines for Jury work published on the FIS Website

352.2 Disqualification

352.2.1 Disqualification should be used only for major infractions and for infractions with a clear impact on the final result of a competition.

352.2.2 In addition, a competitor should automatically be disqualified if he:

- participates in the competition under false pretences
- either jeopardizes the security of persons or property or actually causes injury or damage
- runs more than one leg in a relay competition (ICR art. 327.1.1)

352.2.3 A competitor who receives a second written reprimand in the same season will be automatically disqualified. Written reprimands given during the season are not valid in the WSC and OWG periods. Written reprimands given during WSC or OWG are valid until the end of the season.

352.2.4 During stage events, an offence that is normally sanctioned with a DSQ can instead be sanctioned by a time penalty (see ICR art. 352.4.2). Using DSQ or time penalty will be the Jury's decision.

352.2.5 After disqualification, the competitor's name will be shown on a revised result list indicating his/her status as DSQ and no times must be printed for this competitor.

352.2.6 In Sprint and Team sprint competition, if an infraction leads to disqualification and that infraction caused another competitor (or team) not to advance to the next round, the Jury may allow the competitor (or team) to proceed into the next round. In this case the competitor or team concerned will start in the least favorable start position.

352.3 Competition suspension

352.3.1 Competition suspension can only be used for ICR infractions during sprint heats and bonus sprints (both intermediate and finish).

352.3.2 In Sprint competitions, a competition suspension means that the competitor will be ranked last in the heat and last in the round (6th for final, 12th for 1⁄2 finals and 30th for 1⁄4 finals).

352.3.3 In Mass Start or Skiathlon competitions, a competition suspension means that the competitor will be relegated out of the result of a bonus sprint.

352.4 Time Penalty

352.4.1 Early start infractions should be sanctioned by time penalties:

352.4.1.1 In interval start competitions or sprint qualifications, early start infractions should be sanctioned by a minimum time penalty of 15 seconds (the competitor's actual skiing time + 15 seconds minimum penalty).

352.4.1.2 In competitions with handicap start, early start infractions should be sanctioned by a time penalty equal to the time gained (posted start time minus actual start time) + 30 seconds minimum penalty.

352.4.2 In stage events, the Jury can decide to substitute a DSQ with a 3 minutes time penalty (see ICR art. 352.2.4).

352.5 Written Reprimand

352.5.1 Written reprimand should be used for all infractions of the rules that do not lead to a clear advantage for the offender.

352.6 Verbal Reprimand

352.6.1 Verbal reprimand should be used only to inform a competitor that his technique or behavior is very close to being in violation of the rules.

352.7 Monetary Fine

352.7.1 Monetary fines can be given to any accredited person.

352.7.2 Monetary fine should be used for infractions of advertising and commercial markings rules, for minor course discipline infractions, and for violation of restrictions on ski testing and warming up.

352.7.3 For competitors, a monetary fine may also be accompanied by a written reprimand.

F. Protests and Appeals

361 Protests

361.1 Types of Protests

361.1.1 Against admittance of competitors or their competition equipment,

361.1.2 Against the course or its condition,

361.1.3 Against another competitor or against an official during the competition,

361.1.4 Against timekeeping results,

361.1.5 Against decisions of the Jury. Also see exceptions 325.6.2 and 326.6.2.

361.1.6 Against clerical errors or violations of the FIS rules after the competition

361.2 Place of Submission

The various protests are to be submitted as follows:

361.2.1 Protests according to the art. 310 – 344.4 at the location designated on the official notice board or at a place announced at a team captains' meeting.

361.2.2 Protests concerning clerical errors or violations of the FIS rules after the competition must be sent by registered mail through the competitor's National Ski Association to the FIS Office within one month of the competition.

361.3 Deadlines for Submission

361.3.1 Against the admittance of a competitor
- before the draw

361.3.2 Against the course or its condition
- not later than 15 minutes after the end of official training

361.3.3 Against another competitor or competitor's equipment or against an official because of irregular behavior during the competition
- within 15 minutes after the posting of the unofficial result list.

361.3.4 Against the timekeeping
- within 15 minutes after the posting of the unofficial result list.

361.3.5 Against Jury decisions that are not sanctions
- within 15 minutes after the posting of the unofficial result list.

361.3.6 Against clerical errors or violations of the FIS Rules after the competition
- within one month of the competition.

361.4 Form of Protests

361.4.1 Protests are to be submitted in writing.

361.4.2 Protests must be substantiated in detail. Proof must be submitted and any evidence must be included.

361.4.3 CHF 100.– or the equivalent in another valid currency must be deposited with the submittal of the protest. This deposit will be returned if the protest is upheld. Otherwise it goes to the account of the FIS.

361.4.4 A protest may be withdrawn by the protesting party before the publication of a decision by the Jury. In this case, the money deposit must be returned.

361.4.5 Protests not submitted on time or submitted without the protest fee are not to be considered.

361.5 Authorization

The following are authorized to submit protests:

- the National Ski Associations
- Team Captains.

361.6 Settlement of Protests by the Jury

361.6.1 The Jury meets to deal with the protests at a predetermined place and time fixed and announced by it.

361.6.2 At the vote on the protest, only the Jury members are to be present. The TD chairs the proceedings. Minutes of the proceedings are to be kept and signed by all voting members of the Jury. The decision requires a majority of all voting members of the Jury, not just of those present. In case of a tie, the TD's vote is decisive.

The principle of a free evaluation of the evidence is maintained. The rules on which the decision is to be based shall be applied and interpreted in such a way that fair proceedings taking into account the maintenance of discipline are guaranteed.

361.6.3 The decision is to be made public immediately after the proceedings by posting on the official notice board with the publication time stated.

362 Right of Appeal

362.1 The Appeal

362.1.1 It can be made

- against all decisions of the Jury (see also ICR 224.11)
- against the official result lists. This appeal has to be directed exclusively against an obvious and proven calculation mistake.

362.1.2 Appeals must be submitted to the FIS by the NSA.

362.1.3 Deadlines

362.1.3.1. Appeals against the decisions of the Jury are to be submitted within 48 hours of the publication of the official results list

362.1.3.2 The appeals against the official results are to be submitted within 30 days, including the day of the competition.

362.1.4 The decision concerning the appeals are taken by

- the Appeals Commission
- the FIS Court.

362.2 Postponing Effect

The evidence submitted (protest, appeal) may not cause a postponement of the appeal.

362.3 Submission

All evidence must be in writing to be substantiated. Proof and evidence are to be included. Evidence submitted too late must be declined by the FIS (see 225.3). In order to file an appeal it must be accompanied with a deposit of CHF 500, which will be refunded if the appeal is upheld.

G. Popular Cross-Country Competitions

380 Definition of Popular Cross-Country Competitions

380.1 Competitions

380.1.1 Popular Cross-Country Competitions are competitions open to all Cross-Country competitors, licensed and non-licensed, without limitation on competition distance or format.

380.1.2 "Popular" refers to a format in Cross-Country racing, with mass start distances of at least 30 km for ladies and 50 km for men, full length competition courses, and terrain dictated by the natural landscape.

381 Entries and Competitors

381.1 Entries

381.1.1 Entries should be forwarded promptly by e-mail, by facsimile transmission or online in accordance with regulations in the invitation. Early entries may receive a reduced entry fee. Additional fees may be charged for late entries.

381.2 Licenses

381.2.1 Licensed competitors are responsible for complying with the license requirements of their own NSAs.

381.3 Seeding

381.3.1 Competitors may be placed in different starting positions according to their competitive abilities. The seeding may include an elite start group. The seeding of the elite start group should be according to the competitors FIS Points and competitors without FIS Points should be seeded based on known previous performance or by nomination of the competitors NSA.

381.4 Grouping

381.4.1 Competitors may be grouped in accordance with results from previous years' competitions or other competitions. They may also be grouped by gender and age or by date of submission of competition entry.

381.5 Results

381.5.1 Separate result list must be published for men and ladies.

381.6 Competitors

381.6.1 Popular Cross-Country Competitions are organised for the enjoyment of all participating competitors. Because these competitions involve competitors with a wide range of experience and ability, good sportsmanship and courtesy toward other competitors are essential. Competitors who demonstrate unsportsmanlike behavior or do not follow these rules or the rules of the competitions may be disqualified by the Jury. During a competition competitors must

- follow the marked course from the start to finish passing all control points

- complete the course on skis using only their own means of propulsion and without assistance from others
- neither hinder nor interfere with other competitors
- make a reasonable effort to allow faster competitors to pass. Normally slower competitors should use the right track or side of the course, faster competitors the left.

381.7 For Popular Cross-Country races on the FIS World Cup or Marathon Cup calendar, all competitors placed in an elite group must comply with ICR article 207 “Advertising and Commercial Marking“ and with article 222 „Competition Equipment“

382 Information

382.1 Announcement

382.1.1 The announcement should contain the following information

- name of the competition
- competition site and the alternative site, if any
- course distance (s) and technique (s)
- competition date and starting time
- seeding procedures
- entry deadline
- registration fee
- lodging and transportation information
- prizes and awards
- refund policy if the competition is cancelled
- insurance regulations
- any other useful or necessary information

382.2 Information for Competitors

382.2.1 Before the start of the competition, competitors should receive information regarding the following

- starting time
- course description and profile
- technique(s)
- transportation information
- identification sticker and control card, if any
- ski marking
- starting procedures
- warm-up area and procedures
- feeding station locations and refreshments available
- procedure to follow if a skier does not complete the competition
- finish line procedure
- information regarding emergency medical procedures
- cut-off times, if any
- clothing drop off and pickup sites

- changing area, shower location, and food sites
- results service with grouping and announcements
- protest procedures
- prizes and awards
- procedures for short notice competition cancellation
- time and location of Team Captains' and Jury meetings, press conferences and other meetings
- communication services
- other necessary information

383 Jury

383.1 The Jury

383.1.1 In addition to being a forum for dispute resolution, the Jury should act as an adviser for the competition Organiser in dealing with various aspects of the competition. The safety of the competitor should be given priority. The Jury should consist of

- the TD who is the chairman of the Jury
- the National Assistant TD, appointed by the NSA
- the chief of competition

The TD may invite additional persons to attend Jury meetings where appropriate. These persons are advisory in capacity and do not carry a vote.

384 The Course

384.1 Width

384.1.1 All obstacles must be cleared from the course to a width that allows, at a minimum, double tracks to be set throughout the length of the course. For free technique competitions the course width should allow unhindered overtaking.

384.2 Start Area

384.2.1 The start area should be flat or nearly flat. It should lead directly into the course and be wide enough to avoid excessive crowding. The start should gradually narrow to the width of the course over a distance sufficient in length to allow competitors to spread out before entering the tracks. The start area should be organised to provide for

- ski marking
- control of competitor identification
- control of commercial markings
- competitor seeding
- crowd control.

384.3 Finish Area

384.3.1 The course should enter the finish area on a straight and flat approach. The finish area should be flat and sufficiently wide to allow several competitors to finish at the same time without impeding each other.

The last 200 meters should have a width of at least 10 meters and be divided into at least 3 lanes separated with appropriate markings. Where more than one competition (two races of different distances) are held over the same course at the same time, separate finishing lanes should be provided to ensure that the leaders in the longer competition are not hindered by slower finishers in the shorter competition. The finish area should be designed and equipped for the necessary control functions and to avoid crowding. Feeding, access to clothing, showers or transportation to such facilities should be clearly marked in different languages and available near the finish area.

384.4 Course Preparation

384.4.1 Pre-season

The course should be groomed and maintained to ensure that the competition can be held safely with a minimum of snow cover.

384.4.2 Winter preparation

The course should be packed and groomed throughout the winter to ensure a solid base for final preparation.

384.4.3 Free Technique

In free technique competitions, the course should be well packed and wide enough to allow two competitors to ski side by side. Where appropriate, one single track may be set along the side of the course. The last 200 meters should be prepared to a width of at least 10 m. This section should be divided into at least 3 lanes and separated with appropriate markings.

384.4.4 Classical Technique

Normally the course should be set with two tracks. Where the width makes it possible, more tracks should be set. In curves the tracks should only be set if the skis can glide unrestrained in the set track. Where the curves are too sharp or the speed is too high to remain in the tracks, then the tracks should be removed. In steep downhills or other locations as designated by the TD and chief of competition, no tracks should be set. In the finish area, the last 200 meters should be set with as many tracks as possible. In appropriate situations, with approval of the TD and the chief of competition, course grooming may take place during the competition.

384.4.5 Both Techniques

Competitions may be carried out in both techniques at the same time and on the same course. In such cases, the course for free technique should be separated from the classical course with appropriate barriers or markings so classical competitors do not have the opportunity to use the other course and vice versa. Each course should be packed and prepared in accordance with article 384.4.3 and 384.4.4.

384.5 Measuring and Marking

384.5.1 The competition course must be measured for length from start to finish by chain, tape or measuring wheel. Each kilometer should be marked. The last 500 meters and the last 200 m should also be marked. Places such as steep downhills, curves, crossings should be given special marking.

384.6 Feeding

384.6.1 Feeding stations should be provided approximately every 10 km. If the course is difficult, the distance between the feeding stations may be shortened. In easy terrain, the distance may be increased. For competitions longer than 50 km different types of drinks and other appropriate nourishment should be provided.

384.6.2 When team officials give refreshments to their competitors, they must follow ICR 344.2.

384.7 Course Layout

384.7.1 Popular Cross-Country competitions should be conducted to accommodate all levels of competitors from recreational racers to elite athletes. Course layout should be adapted to the skill levels of the participants.

384.8 Bonus sprints

384.8.1 When having sprints along the course, the final approach to the sprint should be at least 75 m straight that is wide enough for 2 competitors to sprint side by side. The bonus sprint finish line must be clearly marked. Sprint controllers must be assigned to each bonus sprint.

385 Control

385.1 Control Procedure

385.1.1 All aspects of the competitions must be controlled in a manner to ensure the safe and fair conduct of the competition for the competitors. The location of control points and utilization of controllers should be determined by the chief of competition in consultation with the TD, giving particular attention to the following

- technique control, if any
- completion of the entire competition course without shortcuts
- completion of the entire competition on skis marked as required by the Organiser (seeded competitors must comply with article 343.11, all others are allowed to change one ski during the competition)
- ensuring any support or assistance given competitors is in accordance with the ICR
- compliance with ICR commercial markings regulations
- providing a competition course free from obstructions
- ensuring competitors do not obstruct or hinder one another
- control at sprint positions and finish line
- other control aspects as required.

385.1.2 Controllers should be qualified to perform their assigned duties.

386 Medical and Safety

386.1 Chief of Medical and Rescue Service

386.1.1 A chief of medical and rescue service will be appointed for every PCCC. He will be a member of the Competition Committee, and may be invited to

attend the Jury meetings. The chief of medical and rescue service must be a licensed medical officer.

386.1.2 First Aid and Medical Service

The first aid and medical services must be completely operational during all training times. Details of the Medical Support Requirements are given in chapter 1 of the FIS Medical Guide containing Medical Rules and Guidelines.

386.2 Planning

386.2.1 The medical officer shall prepare an emergency first aid, evacuation, and notification plan for injuries, accidents, or deaths. Information regarding this plan and procedures to be followed in the event of inJury, accident, or death should be provided to participants and competition officials.

386.3 Training

386.3.1 The medical officer shall designate, inform and train a sufficient number of medical, safety and emergency personnel to provide for the safety and medical needs of the competitors.

386.4 First Aid Stations

386.4.1 The location of first aid stations shall be marked by appropriate signs along the course. There shall be heated first aid stations in the start and finish areas.

387 Cold Weather Precautions

387.1 Background

387.1.1 There are three main factors to be considered by the Jury regarding cold weather safety: the temperature; the duration of the exposure; and, the clothing and other protection against cold weather. These factors together with any other relevant information such as the "wind chill factor" must be taken into consideration when a decision is made regarding cold weather.

387.2 Between minus 15 ° and minus 25 °C

387.2.1 If the temperature level is forecast to be between minus 15 °C and minus 25 °C at any point on the course, recommendations regarding cold weather protection should be made available to the participants. Under such conditions it is the responsibility of the participants to seek the information and to follow the recommendations given by the organiser.

387.3 Minus 25 °C and below

387.3.1 If the temperature in a major portion of the course is minus 25 °C or below, the competition shall be delayed or cancelled.

387.4 Warm Weather Precautions

387.4.1 If the temperature is forecast to rise above 5 °C during the course of the competition, and exposure to sunshine is expected, recommendations must be given to competitors concerning clothing, skin protection and the need to consume adequate liquid before and during the competition.

Feeding stations must ensure that they have adequate drinks to meet the increased demand. First aid stations must be briefed to be alert for signs of dehydration or any damage from sun exposure, and be prepared to take necessary measures in cases of dehydration or sunburn.

388 Cancellation Procedure

388.1 Policy

388.1.1 Normally the factors to be considered for the cancellation or the postponement of a competition are: temperature, weather conditions, snow conditions and course conditions. If a competition is postponed, a new date should be arranged with the NSA concerned.

388.1.2 Cancellation or Postponement more than six days before the competition

If a decision to cancel or postpone a competition is taken at least 6 days before the date of the original competition, the organising committee must immediately inform the NSAs, the media and post the information on the Internet. This decision will be made by the Organising Committee in consultation with the TD.

388.1.3 Short Notice Cancellation

A short notice cancellation is made six or fewer days before the date of the competition. However, a competition cannot be cancelled less than three hours before the scheduled start time except for the competitors' and officials' safety. The cancellation procedure must be included in the information to the competitors (see article 382.2). The cancellation decision shall be made by the Jury.

388.1.4 Refund Policy

If a competition is postponed, competitors who have paid the entry fee should be allowed to compete in the postponed competition without additional charge. If a competitor decides not to compete in the postponed competition, the entry fee will not be refunded. The policy for refunds in a cancelled competition should be stated in the announcement for the competition (article 382.1).

389 International Ski Competition Rules

389.1 Fundamental rule

389.1.1 All matters not covered within this section G are subject to the provisions in section A – H of the International Ski Competition Rules, book II.

H. Rollerski Competitions

396 Rollerski Competitions

396.1 Rollerski ICR Definitions

396.1.1 The matters covered within this section of the ICR are intended to focus on the unique aspects of Rollerski sport that are significantly different from the methodologies used in Cross-Country ski sport as outlined in the previous sections of this ICR publication.

396.1.2 The previous sections in this ICR will be used to give specific requirements in areas where there is direct similarity between Rollerski and Cross-Country.

396.1.3 In addition, the underlying principles that apply in the Cross-Country sections of this ICR must also be applied to Rollerski sport.

396.2 Competition Equipment

396.2.1 Rollerski sport equipment must be available as a commercially produced product that is available to the general public.

396.2.2 Random controls will be carried out during the competition.

396.2.3 The diameter of the wheels must not be more than 100 mm.

396.2.4 The distance between the axles of the Rollerskis must not be less than 530 mm.

396.2.5 Two ski poles with specific Rollerski or Cross-Country skiing tips must be used.

396.2.6 Approved cycling helmets and eye protection must be worn.

396.2.7 Shoes or ski boots have to be fixed on the Rollerskis with a Cross-Country binding.

396.2.8 Competitors are permitted to change or repair equipment during the competition but they must do this without any outside assistance other than being handed the replacement equipment or tools.

396.3 Competition Formats and Programmes

396.3.1 The following competition formats and recommended distances may be used and the competitions may be carried out in either classic or free technique:

Prologue	
Uphill 4 – 6 km	all categories
Undulating 8 – 12 km	all categories
Interval Start	
8-18 km	all Ladies and Junior Men
25-30 km	Senior Men
Uphill (Interval or Pursuit or Mass Start)	
Up to 10 km	all Ladies and Junior Men

Up to 15 km	Senior Men
Individual Sprint 150 – 250 m	all categories
Individual Long Sprint (800-1500 m)	all categories
Pursuit	
8-18 km	all Ladies and Junior Men
12 - 30 km	Senior Men
Skiathlon 6-12 km + 6-12 km	all Ladies and Junior Men
Skiathlon 10-18 km + 10-18 km	Senior Men
Team Sprint Team Sprint (2 members per team)	
2 x 2 km x 3 laps	all Ladies and Junior Men
2 x 2 km x 5 laps	Senior Men
Mixed Team Sprint (2 members per team)	
2 x 2 km x 3 laps	Juniors (one man+one lady)
2 x 2 km x 5 laps	Seniors (one man+one lady)
Relay	
3 x 4 km	all Ladies and Junior Men
3 x 6 km	Senior Men

Actual competition distances can vary by ±15%.

396.4 Course Design Standards

396.4.1 Rollerski competitions are held on asphalt or similar artificial or natural surfaces which are hard packed.

396.4.2 The course must be designed with the highest priority being given to the safety of competitors.

396.4.3 Obstacles or hazardous objects along or beside the track must be removed, or if not possible, they must be clearly marked and where necessary protected by padding.

396.4.4 The course has to be at least 4 meters wide.

396.4.5 The downhill sections must not have any sharp curves.

396.4.6 Warm up and cool down areas must exist and be secured.

396.5 General Course Preparations

396.5.1 Courses should be ready for inspection and for official training by the teams at least one day before the competition.

396.5.2 Courses must be closed to normal traffic. Only the OC, Jury, security cars/motorbikes are allowed to be on the course during the competition or during official training.

396.6 Requirements of the Competitors

396.6.1 The competition season is defined as 1st January to 31st December. See CC ICR article 341 for age categories.

396.6.2 Final entries should be received at least 14 days before the competition starts.

396.6.3 Methods of grouping

396.6.4 Refer to World Cup Rules for special seeding rules.

396.7 Refreshment Stations

396.7.1 During competitions which are 8 km or less, refreshment services are only permitted in the finish zone after the finish line.

396.7.2 For competitions longer than 8 km but less than 30 km, refreshment services are allowed along the course without the use of motorized vehicles. For competitions longer than 30 km, motorbikes may be allowed at the discretion of the Jury.

396.7.3 For uphill competitions Jury decides the location of the refreshment stations.

396.8 Start and Finish Requirements

396.8.1 The start line must be clearly marked on the surface using paint.

396.8.1.1 Mass start areas must be a minimum of 6 m wide in order to permit a fair start.

396.8.1.2 At mass start competitions, skating is not permitted for the first 70 m after the start.

396.8.1.3 Handicap starts must have a minimum of two corridors that are a minimum of 10 m in length and each corridor must be a minimum of 2 m wide.

396.8.1.4 For World Cup during Mass Starts and Pursuit Starts it is required to video tape the no-skating areas at the start and the finish with a minimum of two digital video cameras.

396.8.1.5 There must be radio or phone contact between the start and the finish area.

396.8.1.6 There must be a loudspeaker system at the start and the finish area.

396.8.2 Finish Area Requirements

396.8.2.1 Three finish corridors which are 2m wide must be marked for the final 50 m before the finish line. The final 150 m of the course should be relatively straight.

396.8.2.2 For Rollerski World Cup and Rollerski World Championships the finish corridors must be videotaped using a minimum of 2 digital video cameras. Play back units must be available in the Jury room.

396.8.2.3 The finish line must be clearly painted on the surface of the course.

396.8.2.4 The Finish Zone (Roll Out Zone) which follows the finish line must be a minimum of 100 m for sprint competitions. For distance competitions the Jury will decide on this.

396.8.2.5 The start area, the finish area and the exchange area must be secure from spectators and unauthorized coaches and service personnel.

396.9 Exchange Zone

396.9.1 The exchange zone for Team Relay or Team Sprint must be a minimum of 15 m wide and 30 m in length.

396.9.2 The exchange zone must be clearly marked with a line at the beginning of the zone. When the front wheel of the arriving competitor reaches this exchange line the corresponding team mate is allowed to depart the exchange zone. No physical contact between the competitors is required.

OLYMPIC WINTER SPORT

THE RULES OF CURLING

and

Rules of Competition

October 2016

THE SPIRIT OF CURLING

Curling is a game of skill and of tradition. A shot well executed is a delight to see and it is also a fine thing to observe the time-honoured traditions of curling being applied in the true spirit of the game. Curlers play to win, but never to humble their opponents. A true curler never attempts to distract opponents, nor to prevent them from playing their best, and would prefer to lose rather than to win unfairly.

Curlers never knowingly break a rule of the game, nor disrespect any of its traditions. Should they become aware that this has been done inadvertently, they will be the first to divulge the breach.

While the main object of the game of curling is to determine the relative skill of the players, the spirit of curling demands good sportsmanship, kindly feeling and honourable conduct.

This spirit should influence both the interpretation and the application of the rules of the game and also the conduct of all participants on and off the ice.

REVIEW PROCESS

The Rules of Curling and the Rules of Competition will be reviewed by the World Curling Federation (WCF) Competitions & Rules Commission on an annual basis. Member Associations may submit in writing suggestions for this review to the Secretariat by 15 May. The proposals will be discussed at the WCF Annual Congress and then voted upon at the WCF Annual General Assembly.

WCF MISSION STATEMENT

To be the world's favourite Olympic / Paralympic Winter team sport.

WCF SECRETARIAT

3 Atholl Crescent
Perth PH1 5NG, Scotland
Tel: +44 1738 451 630 Fax: +44 1738 451 641
info@worldcurling.org www.worldcurling.org

TABLE OF CONTENTS

Page

	October 2016 / Review Process / WCF Mission Statement	1
Table of Contents		2
The Rules of Curling:	R1. Sheet	3
	R2. Stones	5
	R3. Teams	6
	R4. Position of Players	8
	R5. Delivery	9
	R6. Free Guard Zone (FGZ)	11
	R7. Sweeping	11
	R8. Touched Moving Stones	12
	R9. Displaced Stationary Stones	14
	R10. Equipment	16
	R11. Scoring	17
	R12. Interrupted Games	19
	R13. Wheelchair Curling	19
	R14. Mixed Curling	21
	R15. Mixed Doubles Curling	21
	R16. Prohibited Substances	27
	R17. Inappropriate Behaviour	27
Rules of Competition:	C1. General	28
	C2. Participating Teams	29
	C3. Uniforms / Equipment	31
	C4. Pre-Game Practice	33
	C5. Length of Games	34
	C6. Game Timing	34
	C7. Team Time-Outs / Technical Time-Outs	37
	C8. Stone Assignment / LSD	38
	C9. Team Ranking Procedure / DSC	41
	C10. Umpires	43
Competitions – the Playdown Systems		45
Qualification - World Championships Men & Women		49
Qualification - World Junior Championships (WJCC)		50
World Seniors (WSCC), World Mixed Doubles (WMDCC) & World Mixed Curling Championship (WMxCC)		50
Pacific-Asia Curling Championships (PACC)		52
European Curling Championships (ECC)		53
Qualification System – the Americas Zone		55
Minimum Standards, Eligibility		58
Tie-breakers for four Qualifiers		60
Tie-breakers for Relegation		64
Tie-breakers for Qualifiers and Relegation		65
Play-off Systems		67
Quarter-Finals Play-off System		68
Dress Code		69
Glossary of Terms		70

These rules apply to any game or competition to which they are made applicable by the curling organisation having jurisdiction.

R1. SHEET

(a) The length of the ice sheet from the inside edges of the back boards is 45.720 metres (150 feet). The width of the sheet from the inside edges of the side lines is a maximum of 5.000 m. (16 ft. 5 inches). This area is delineated by lines drawn, or by dividers placed on the perimeter. If the size of an existing facility will not permit these measurements, then the length may be reduced to a minimum of 44.501 m. (146 ft.), and the width to a minimum of 4.420 m. (14 ft. 6 in.).

(b) At each end of the sheet there are clearly visible parallel lines in the ice from side line to side line as follows:

(i) the tee line, 1.27 cm. (1/2 in.) maximum width, placed so that the centre of the line is 17.375 m. (57 ft.) from the middle of the sheet.

(ii) the back line, 1.27 cm. (1/2 in.) maximum width, placed so that the outside edge is 1.829 m. (6 ft.) from the centre of the tee line.

(iii) the hog line, 10.16 cm. (4 in.) in width, placed so that the inside edge is 6.401 m. (21 ft.) from the centre of the tee line.

(iv) the centre line, 1.27 cm. (1/2 in.) maximum width, joins the midpoints of the tee lines and extends 3.658 m. (12 ft.) beyond the centre of each tee line.

(v) the hack line, 0.457 m. (1 ft. 6 in.) in length and 1.27 cm. (1/2 in.) maximum width, is placed parallel to the tee line, at each end of the centre line.

(vi) the courtesy line, 15.24 cm. (6 in.) in length and 1.27 cm. (1/2 in.) maximum width, is placed 1.219 m. (4 ft.) outside and parallel to the hog lines, on each side of the sheet.

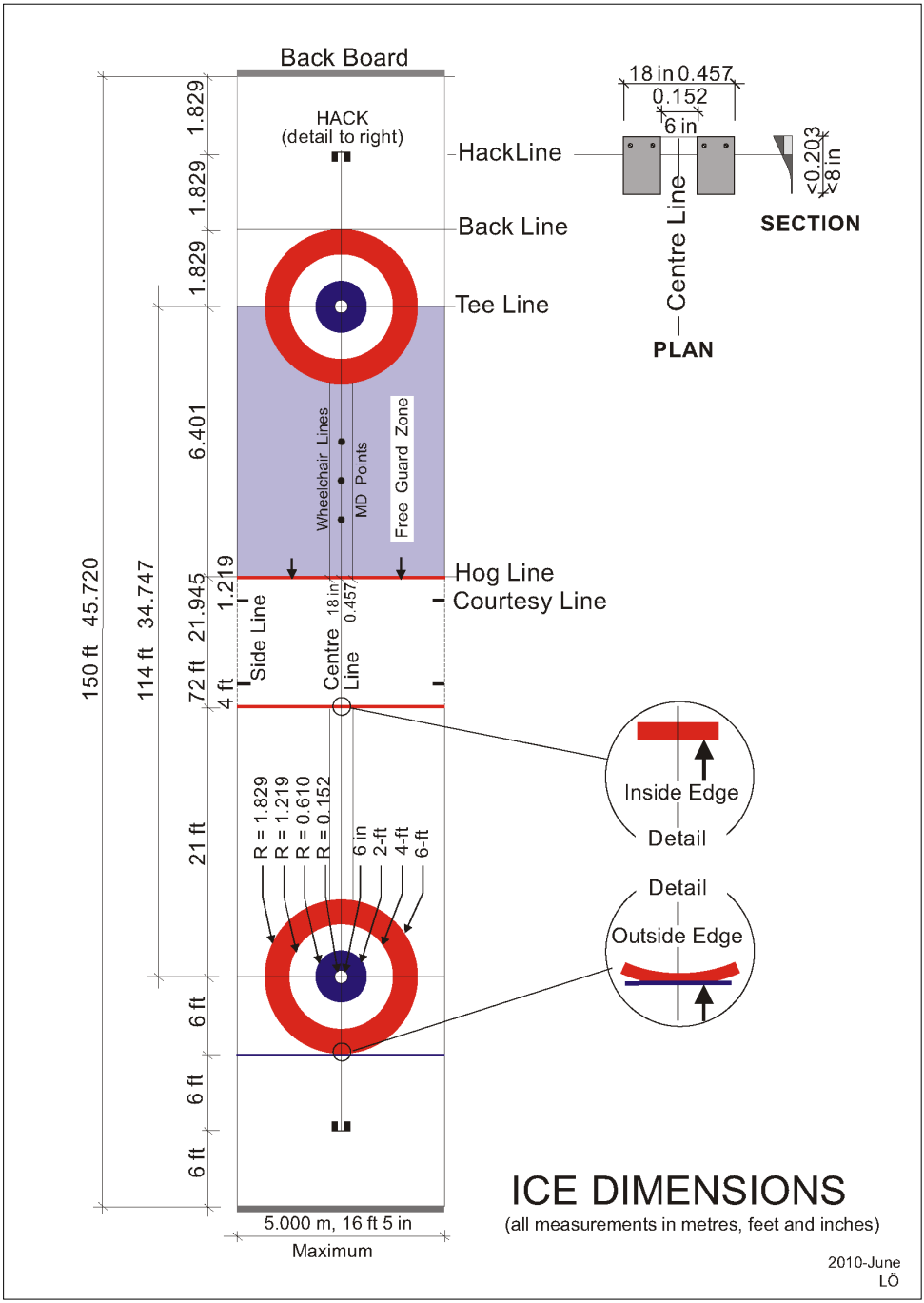
Back Board
HACK
(detail to right)
HackLine
Back Line
Tee Line
Hog Line
Courtesy Line
Side Line
Centre Line
Wheelchair Lines
MD Points
Free Guard Zone
18 in 0.457
0.152
6 in
Centre Line
PLAN
<0.203
<8 in
SECTION
1.829
1.829
1.829
6.401
1.219
21.945
72 ft
4 ft
21 ft
6 ft
6 ft
6 ft
150 ft 45.720
114 ft 34.747
R = 1.829
R = 1.219
R = 0.610
R = 0.152
6 in
2-ft
4-ft
6-ft
Inside Edge
Detail
Detail
Outside Edge
5.000 m, 16 ft 5 in
Maximum
ICE DIMENSIONS
(all measurements in metres, feet and inches)
2010-June
LÖ

(c) For wheelchair events, at each end of the sheet, 2 thin (i.e. – wool) wheelchair lines are placed parallel to and on opposite sides of the centre line, extending from the hog line to the outermost edge of the nearest circle, with the outside edge of each line being 0.457 m. (18 in.) from the centre line.

(d) A centre hole (tee) is placed at the intersection of each tee line and centre line. With the tee as centre, there are four concentric circles placed at each end of the sheet, with the outer edge of the outer circle having a radius of 1.829 m. (6 ft.), the next circle a radius of 1.219 m. (4 ft.), the next circle a radius of 0.610 m. (2 ft.), and the innermost circle having a minimum radius of 15.24 cm. (6 in.).

(e) Two hacks are placed on the hack line, on opposite sides of the centre line, with the inside edge of each hack 7.62 cm. (3 in.) from the midpoint of the centre line. The width of each hack shall not exceed 15.24 cm. (6 in.). The hack is attached to suitable material, and the inside edge of that material is placed on the inside edge of the hack line so that the hack does not extend more than 20.32 cm. (8 in.) in front of the hack line. If the hack is recessed into the ice, this is not to be more than 3.81 cm. (1.5 in.) in depth.

R2. STONES

(a) A curling stone is of circular shape, having a circumference no greater than 91.44 cm. (36 in.), a height no less than 11.43 cm. (4.5 in.), and a weight, including handle and bolt, no greater than 19.96 kg. (44 lbs.) and no less than 17.24 kg. (38 lbs.).

(b) Each team uses a set of eight stones having the same handle colour and individually identified by visible markings. If a stone is damaged and becomes unsuitable for play, a replacement stone is used. If a replacement stone is not available, a stone previously delivered in the end is redelivered.

(c) If a stone is broken in play, the teams use the “Spirit of Curling” to decide where the stone(s) should be placed. If agreement cannot be reached, the end will be replayed.

(d) If a stone rolls over while in motion, or comes to rest on its side or top, it is removed from play immediately.

(e) Should a handle completely separate from a stone during delivery, the delivering player has the option of either allowing the play to stand, or of redelivering the stone after any displaced stones have been replaced to their positions prior to the incident taking place.

(f) A stone that does not come to rest completely beyond the inside edge of the hog line at the playing end is removed from play immediately, except when it strikes another stone, in which case it remains in play.

(g) A stone that completely crosses the outside edge of the back line at the playing end is removed from play immediately.

(h) A stone that touches a divider or a side line is removed from play immediately and is prevented from entering adjacent sheets.

(i) A stone may be measured only visually until the last stone of the end has come to rest, except to determine if a stone is in play, or, prior to playing the second, third, or fourth stone of an end, to determine if a stone is in the Free Guard Zone.

(j) Teams are not to make alterations to, nor place any object on or over, their game stones.

R3. TEAMS

(a) A team is composed of four players. Each player delivers two stones, in consecutive order in each end, while alternating with an opponent.

(b) A team declares its delivery rotation, and the skip and vice-skip positions, prior to the start of a game and maintains that rotation and those positions throughout that game subject to (d) (ii). A team that deliberately changes its delivery rotation, or positions, during a game will forfeit the game, unless it was done when bringing in an alternate player.

(c) If a player is missing at the start of a game, the team may either:

(i) start the game with three players, the first two players delivering three stones each, and the third player delivering two stones, in which case the missing player may enter the game in the declared delivery rotation and position at the start of an end; or

(ii) start the game using a qualified alternate.

(d) Where a player is unable to continue to play in a game, the team may either:

(i) continue play with the remaining three players, in which case the player who left the game may re-enter at any time provided that the returning player's two stones are delivered within the team's declared delivery rotation in that end. A player may leave and return to a game only one time in any game; or

(ii) bring in a qualified alternate at the beginning of an end, in which case the delivery rotation and the skip and vice-skip positions may be changed (the revised rotation of play applying for the remainder of that game), and the replaced player may not re-enter the game.

(e) A team may not play with fewer than three players, all players delivering all their allocated stones in each end.

(f) In competitions where alternates are allowed, only one alternate can be registered and used in that competition. If there is a violation, the offending team will forfeit the game.

(g) If a player delivers the first allocated stone of an end and is unable to deliver the second allocated stone, the following is the procedure for the remainder of that end. If the player is the:

(i) first player, the second player delivers the stone

(ii) second player, the first player delivers the stone

(iii) third player, the second player delivers the stone

(iv) fourth player, the third player delivers the stone

(h) If a player whose turn it is to deliver is unable to deliver both of the allocated stones during an end, the following is the procedure for the remainder of that end. If the player is the:

(i) first player, the second player delivers three stones, then the third player delivers three stones, then the fourth player delivers the last two stones

(ii) second player, the first player delivers three stones, then the third player delivers three stones, then the fourth player delivers the last two stones

(iii) third player, the first player delivers the first stone of the third player, then the second player delivers the second stone of the third player, then the fourth player delivers the last two stones

(iv) fourth player, the second player delivers the first stone of the fourth player, then the third player delivers the second stone of the fourth player.

R4. POSITION OF PLAYERS

(a) Non-Delivering Team:

(i) During the process of delivery the players take stationary positions along the side lines between the courtesy lines. However:

1) the skip and/or vice-skip may take stationary positions behind the back line at the playing end, but must not interfere with the choice of place of the skip or vice-skip of the delivering team.

2) the player who is to deliver next may take a stationary position to the side of the sheet, behind the hacks, at the delivery end.

(ii) The non-delivering team players must not take any position, nor cause any motion, which could obstruct, interfere with, distract or intimidate the delivering team. If such an action occurs, or an external force distracts a player during delivery, that player has the option of allowing the play to stand, or of redelivering the stone after all displaced stones have been replaced to their positions prior to the violation taking place.

(b) Delivering Team:

(i) The skip, or the vice-skip when it is the skip's turn to deliver, or when the skip is not on the ice, is in charge of the house.

(ii) The player in charge of the house is positioned inside the hog line, with at least one foot/wheel on the ice surface of the playing end of the team's sheet, while the team is in the process of delivery.

(iii) The players who are not in charge of the house or delivering a stone take positions to sweep.

(iv) Any improper position of players will result in the delivered stone being removed from play, and any displaced stones shall be replaced, by the non-offending team, to their positions prior to the violation taking place.

R5. DELIVERY

(a) Unless predetermined, or decided by the Last Stone Draw (LSD), the teams opposing each other in a game shall use a coin toss to determine which team delivers the first stone in the first end. This order of play shall be maintained until one team scores, after which the team that most recently scored delivers the first stone in any subsequent end.

(b) Unless predetermined, the team playing the first stone of the first end has the choice of stone handle colour for that game.

(c) Right-handed deliveries are delivered from the hack on the left of the centre line and left-handed deliveries are delivered from the hack on the right of the centre line. A stone delivered from the wrong hack is removed from play, and any displaced stones are replaced, by the non-offending team, to their positions prior to the violation taking place.

(d) A stone must be clearly released from the hand before it reaches the hog line at the delivery end. If the player fails to do so, the stone is immediately removed from play by the delivering team.

(e) If a hog line violation stone is not immediately removed and strikes another stone, the delivered stone is removed from play by the delivering team, and any displaced stones are replaced, by the non-offending team, to their positions prior to the violation taking place.

(f) A stone is in play, and considered delivered, when it reaches the tee line (hog line for wheelchair curling) at the delivery end. A stone that has not reached the relevant line may be returned to the player and redelivered.

(g) All players must be ready to deliver their stones when their turns come, and not take an unreasonable amount of time to play.

(h) If a player delivers a stone belonging to the opposing team, that stone is allowed to come to rest, and is then replaced by a stone belonging to the delivering team.

(i) If a player delivers a stone out of proper rotation, the end continues as if the mistake had not occurred. The player who missed a turn delivers the last stone for that team in that end. If it cannot be determined which player delivered out of proper rotation, the player who delivered the first stone in the end for that team delivers the last stone for that team in that end.

(j) If a player inadvertently delivers too many stones in one end, the end continues as if the mistake had not occurred and the number of stones allocated to the last player of the offending team shall be reduced accordingly.

(k) If a team delivers two stones in succession in the same end:

(i) the second stone is removed and any displaced stones replaced, by the non-offending team, to their positions prior to the violation taking place. The player who delivered the stone played by mistake, redelivers it as the last stone for the team in that end.

(ii) should the infraction not be discovered until after the delivery of a subsequent stone, the end is replayed.

R6. FREE GUARD ZONE (FGZ)

(a) A stone that comes to rest between the tee line and the hog line at the playing end, excluding the house, is deemed to be within an area designated as the FGZ. Also, stones that are in play, on or before the hog line, after striking stones in the FGZ, are deemed to be in the FGZ.

(b) If, prior to the delivery of the fifth stone of an end, a delivered stone causes, either directly or indirectly, an opposition stone to be moved from the FGZ to an out-of-play position, then the delivered stone is removed from play, and any displaced stones are replaced, by the non-offending team, to their positions prior to the violation taking place.

R7. SWEEPING

(a) The sweeping motion can be in any direction (it need not cover the entire width of the stone), must deposit no debris in front of a moving stone, and must finish to either side of the stone.

(b) A stationary stone must be set in motion before it can be swept. A stone set in motion by a delivered stone, either directly or indirectly, may be swept by any one or more of the team to which it belongs anywhere in front of the tee line at the playing end.

(c) A delivered stone may be swept by any one or more of the delivering team anywhere in front of the tee line at the playing end.

(d) No player may ever sweep an opponent's stone except behind the tee line at the playing end, and may not start to sweep an opponent's stone until it has reached the tee line at the playing end.

(e) Behind the tee line at the playing end, only one player from each team may sweep at any one time. This may be any player of the delivering team, but only the skip or vice-skip of the non-delivering team.

(f) Behind the tee line, a team has first privilege of sweeping its own stone, but it must not obstruct or prevent its opponent from sweeping.

(g) If a sweeping violation occurs, the non-offending team has the option of allowing the play to stand, or of placing the stone, and all stones it would have affected, where they would have come to rest had the violation not occurred.

R8. TOUCHED MOVING STONES

(a) Between the tee line at the delivery end and the hog line at the playing end:

   (i) If a moving stone is touched, or is caused to be touched, by the team to which it belongs, or by their equipment, the touched stone is removed from play immediately by that team. A double-touch by the person delivering the stone, prior to the hog line at the delivering end, is not considered a violation.

(ii) If a moving stone is touched, or is caused to be touched, by an opposition team, or by its equipment, or is affected by an external force:

1) If the stone was the delivered stone, it is redelivered
2) If the stone was not the delivered stone, it is placed where the team to which it belongs reasonably considers it would have come to rest had it not been touched.

(b) Inside the hog line at the playing end:

(i) If a moving stone is touched, or is caused to be touched, by the team to which it belongs, or by its equipment, all stones are allowed to come to rest, after which the non-offending team has the option to:

1) remove the touched stone, and replace all stones that were displaced after the infraction to their positions prior to the violation taking place; or
2) leave all stones where they came to rest; or
3) place all stones where it reasonably considers the stones would have come to rest had the moving stone not been touched.

(ii) If a moving stone is touched, or is caused to be touched, by an opposition team, or by its equipment, all stones are allowed to come to rest, after which the non-offending team places the stones where it reasonably considers the stones would have come to rest, had the moving stone not been touched.

(iii) If a moving stone is touched, or is caused to be touched, by an external force, all stones are allowed to come to rest, and then placed where they would have come to rest if the incident had not occurred. If the teams cannot agree, the stone is redelivered after all displaced stones have been replaced to their positions prior to the violation taking place. If agreement on those positions cannot be reached, the end is replayed.

(c) Last Stone Draw (LSD) stones:

(i) If a member of the delivering team touches a moving stone, or causes it to be touched, the stone will be removed and recorded as 199.6 cm (6 ft. 6.5 in.).

(ii) If a member of the non-delivering team touches a moving stone, or causes it to be touched, the stone will be redelivered.

(iii) If an external force touches a moving stone, or causes it to be touched, the stone will be redelivered.

(d) If a moving stone is touched by a stone deflecting off the sheet dividers, the non-delivering team shall place the stone where it reasonably considers the stone would have come to rest had the moving stone not been touched.

R9. DISPLACED STATIONARY STONES

(a) If a stationary stone which would have had no effect on the outcome of a moving stone is displaced, or caused to be displaced, by a player, it is replaced, by the non-offending team, to their positions prior to the violation taking place.

(b) If a stationary stone which would have had no effect on the outcome of a moving stone is displaced, or caused to be displaced, by an external force, it is replaced, with agreement of the teams, to its position prior to the violation taking place.

(c) If a stone which would have altered the course of a moving stone is displaced, or caused to be displaced, by a player, all stones are allowed to come to rest and then the non-offending team has the option to:

(i) leave all stones where they came to rest; or

(ii) remove from play the stone whose course would have been altered, and replace any stones that were displaced after the violation to their positions prior to the violation taking place; or

(iii) place all stones in the positions the team reasonably considers they would have come to rest had a stone not been displaced.

(d) If a stone which would have altered the course of a moving stone is displaced, or caused to be displaced, by an external force, all stones are allowed to come to rest, and are then placed in the positions in which they would have come to rest had a stone not been displaced. If the teams cannot agree, the stone is redelivered after all displaced stones have been replaced to their positions prior to the violation taking place. If agreement on those positions cannot be reached, the end is replayed.

(e) If a displacement is caused by stones deflecting off the sheet dividers, the stones are replaced, by the non-delivering team, to their positions prior to the violation taking place.

(f) Last Stone Draw (LSD) Stones:

(i) If a member of the delivering team displaces a stationary stone, or causes it to be displaced, before the official completes the measurement, the stone will be removed and recorded as 199.6 cm (6 ft. 6.5 in.).

(ii) If a member of the non-delivering team displaces a stationary stone, or causes it to be displaced, before the official completes the measurement, the stone is replaced, by the delivering team, to its position prior to the violation taking place.

(iii) If an external force displaces a stationary stone, or causes it to be displaced, before the official completes the measurement, the stone is replaced, by the delivering team, to its position prior to the violation taking place.

R10. EQUIPMENT

(a) No player shall cause damage to the ice surface by means of equipment, hand prints, or body prints. The procedure will be:
1st incident = 1st official on-ice warning, repair damage
2nd incident = 2nd official on-ice warning, repair damage
3rd incident = repair damage and remove player from the game

(b) No equipment shall be left unattended anywhere on the ice surface.

(c) Teams must not use electronic communication equipment, or any device to modify the voice, during a game. With the exception of stopwatches that are limited to providing 'time' data only, the use of electronic devices during the games, which provide information to players on the field of play, are forbidden.

(d) When a properly functioning electronic hog line device is being used:

(i) The handle must be properly activated so that it is functioning during the delivery, or it will be considered a hog line violation stone.

(ii) A glove or mitt must not be worn on the delivery hand during the delivery of a stone. If there is a violation, the delivered stone shall be removed from play, and any displaced stones shall be replaced, by the non-offending team, to their positions prior to the violation taking place.

(e) The use of a delivery stick shall be restricted as follows:

(i) The delivery stick may not be used in any WCF competition or qualifying event, except wheelchair events.

(ii) Players choosing to deliver with a delivery stick must use that device for the delivery of all their stones during the entire game.

(iii) The stone must be delivered along a straight line from the hack to the intended target.

(iv) The stone must be clearly released from the delivery stick before either foot of the player delivering the stone has reached the tee line at the delivery end. A stone is in play, and considered delivered, when it reaches the hog line at the delivery end.

(v) A delivery stick shall not convey any mechanical advantage other than acting as an extension of the arm/hand.

(vi) If a stick delivery violation occurs, the delivered stone shall be removed from play, and any displaced stones shall be replaced, by the non-offending team, to their positions prior to the violation taking place.

R11. SCORING

(a) The result of a game is decided by a majority of points at the completion of the scheduled ends of play, or when a team concedes victory to its opponent, or when one team is arithmetically eliminated, provided the minimum number of ends have been completed. If the score is tied at the completion of the scheduled ends, play continues with extra end(s) and the team that scores first wins the game.

(b) At the completion of an end (when all stones have been played), a team scores one point for each of its own stones located in or touching the house that are closer to the tee than any stone of the opposition.

(c) The score of an end is decided when the skips or vice-skips in charge of the house agree upon the score. If stones that may have affected the points scored in an end are displaced prior to that decision, the non-offending team receives the benefit that might have accrued from a measurement.

(d) When determining the score of an end, if teams cannot visually decide which stones are closer to the tee, or whether a stone is touching the house, a measuring device is used. Measurements are taken from the tee to the nearest part of the stone. The person in charge of the house from each team is allowed to observe any measurement that is made by a measuring device.

(e) If two or more stones are so close to the tee that it is impossible to use a measuring device, the determination is made visually.

(f) If a decision cannot be reached, either visually or with a measuring device, the stones are considered equal, and:

   (i) If the measure was to determine which team scored in the end, the end is blanked.

   (ii) If the measure was to determine additional points, only the stones closer to the tee are counted.

(g) Should an external force cause the displacement of stones that would have affected the score prior to agreement of the score, the following applies:

   (i) If the displaced stones would have determined which team scored in an end, the end is replayed.

   (ii) If a team secured a point(s), and the displaced stone(s) would have determined if an additional point(s) was scored, that team has the option of replaying the end or of keeping the point(s) already secured.

(h) A team concedes a game only when it is the delivering team. When a team concedes the game before the completion of an end, the score of the end is determined at that time, in the following manner:

   (i) If both teams still have stones to be delivered, “X”s are placed on the scoreboard.

   (ii) When only one team has delivered all of its stones:

1) If the team that delivered all its stones has stone(s) counting, no points are given, “X”s are placed on the scoreboard unless the points are required to determine the outcome.
2) If the team that did not deliver all its stones has stone(s) counting, these points are given and placed on the scoreboard.
3) If no stones are counting, “X”s are placed on the scoreboard.

(i) If a team is not available to start a game at the designated time, the following takes place:

(i) If the delay of the start of play is 1-15 minutes, then the non-offending team receives one point, and will have choice of first or second stone in the first end of actual play; one end is considered completed.

(ii) If the delay of the start of play is 15-30 minutes, then the non-offending team receives one additional point, and choice of first or second stone in the first end of actual play; two ends are considered completed.

(iii) If play has not started after 30 minutes, then the non-offending team is declared the winner by forfeit.

(j) The final score of a forfeited game is recorded as “W – L” (win – loss).

R12. INTERRUPTED GAMES

If for any reason, a game is interrupted, the game recommences where play was stopped.

R13. WHEELCHAIR CURLING

(a) Stones are delivered from a stationary wheelchair.

(b) When the stone is delivered between the hack and the outermost edge of the top of the house at the delivery end, the chair must be positioned so that at the start of the delivery the stone is positioned on the centre line. When the stone is delivered between the outermost edge of the top of the house and the hog line at the delivery end, the chair must be positioned so that at the start of the delivery the entire width of the stone is within the wheelchair lines.

(c) During delivery, the feet of the player delivering the stone must not touch the ice surface and the wheels of the chair must be in direct contact with the ice.

(d) The delivery of the stone is undertaken by the conventional arm/hand release or by the use of an approved delivery stick. Stones must be clearly released from the hand or stick before the stone reaches the hog line at the delivery end.

(e) A stone is in play when it reaches the hog line at the delivery end. A stone that has not reached the hog line at the delivery end may be returned to the player and redelivered.

(f) Sweeping is not permitted.

(g) If a delivery violation occurs, the delivered stone shall be removed from play, and any displaced stones shall be replaced, by the non-offending team, to their positions prior to the violation taking place.

(h) For WCF wheelchair competitions, each on-ice team must have four players delivering stones and must be comprised of both genders at all times during games. A team violating this rule will forfeit the game.

(i) All games will be scheduled for 8 ends.

R14. MIXED CURLING

(a) Each team shall have two male and two female players and the male and female players must deliver stones alternately (M, F, M, F - or - F, M, F, M). No alternate players are permitted.

(b) If a team plays with three players, the alternate gender order of delivery must be maintained (M, F, M - or - F, M, F). If this occurs while a game is in progress, the delivery rotation can be changed to meet this criterion.

(c) The skip and vice-skip can be anyone in the team, but they must be from opposite genders.

(d) All Mixed games are scheduled for 8 ends.

(e) The team is allowed one coach and one other team official. Only those two persons may sit on the designated coach bench.

R15. MIXED DOUBLES CURLING

(a) A team is composed of two players, one male and one female. Alternate players are not allowed. A team must forfeit any game(s) in which it fails to have both players playing for the entire game. One coach and one other team official will be allowed for each team.

(b) The scoring shall be the same as in a regular game of curling. The “positioned” stones that are placed prior to the beginning of each end are eligible to be counted in the scoring.

(c) Each game will be scheduled for 8 ends.

(d) Each team shall deliver 5 stones per end. The player delivering the team's first stone of the end must also deliver the team's last stone of that end. The other team member shall deliver the team's second, third and fourth stones for that end. The player delivering the first stone can change from end to end.

(e) No stone in play, including the "positioned" stones and those in the house, can be moved to an out-of-play position prior to the delivery of the fourth stone of an end (the fourth delivered stone is the first stone that can remove any stone from play). If there is a violation, the delivered stone shall be removed from play, and any displaced stone(s) shall be replaced, by the non-offending team, to their positions prior to the violation taking place.

(f) Prior to the start of every end, one team shall place its "positioned" stone at the playing end of the sheet in one of two positions, designated A and B. The opponent's "positioned" stone shall then be placed in whichever position (A or B) remains vacant. The location of these positions shall be as follows:

(i) Position A: Placement so that the stone is bisected by the centre line and is either immediately in front of or immediately behind one of 3 points in the ice. The points are placed on the centre line (see diagram):

1) at the mid-point between the hog line and the outermost edge of the top of the house.
2) 0.915 m. (3 feet) from the mid-point closer to the house.
3) 0.915 m. (3 feet) from the mid-point closer to the hog line.

Based on the ice conditions, when no event official is available to make the decision, the teams shall determine the specific placement for each sheet for Position A to be used prior to the start of the pre-game practice and that same placement must be used for the entire game.

(ii) Position B: Placement so that the stone is bisected by the centre line and is in the back of the 4-foot circle. The back edge of the

stone is aligned with the back edge of the 4-foot circle (see diagram).

(iii) Power Play: Once per game, each team, when it has the decision on the placement of the "positioned" stones, can use the "Power Play" option to position those two stones. The in-house stone (B), which belongs to the team with last stone in that end, is placed on either side of the house with the back edge of the stone touching the tee line, at the point where the 8-foot and 12-foot circles meet. The guard stone (A) is positioned to the same side of the sheet, the same distance that was determined for the centre guards (see diagram). The "Power Play" option cannot be used in extra ends.

Figure No. 1 - Centre Guard

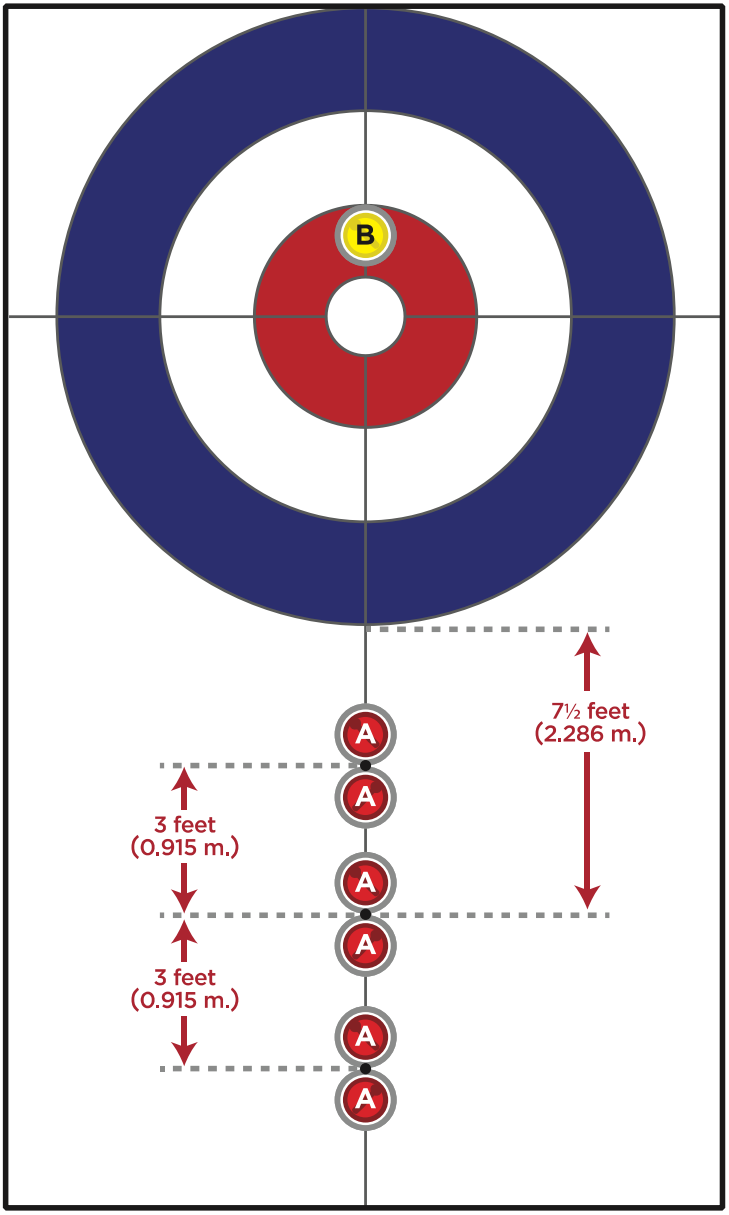

Figure No. 2 - Power Play Option

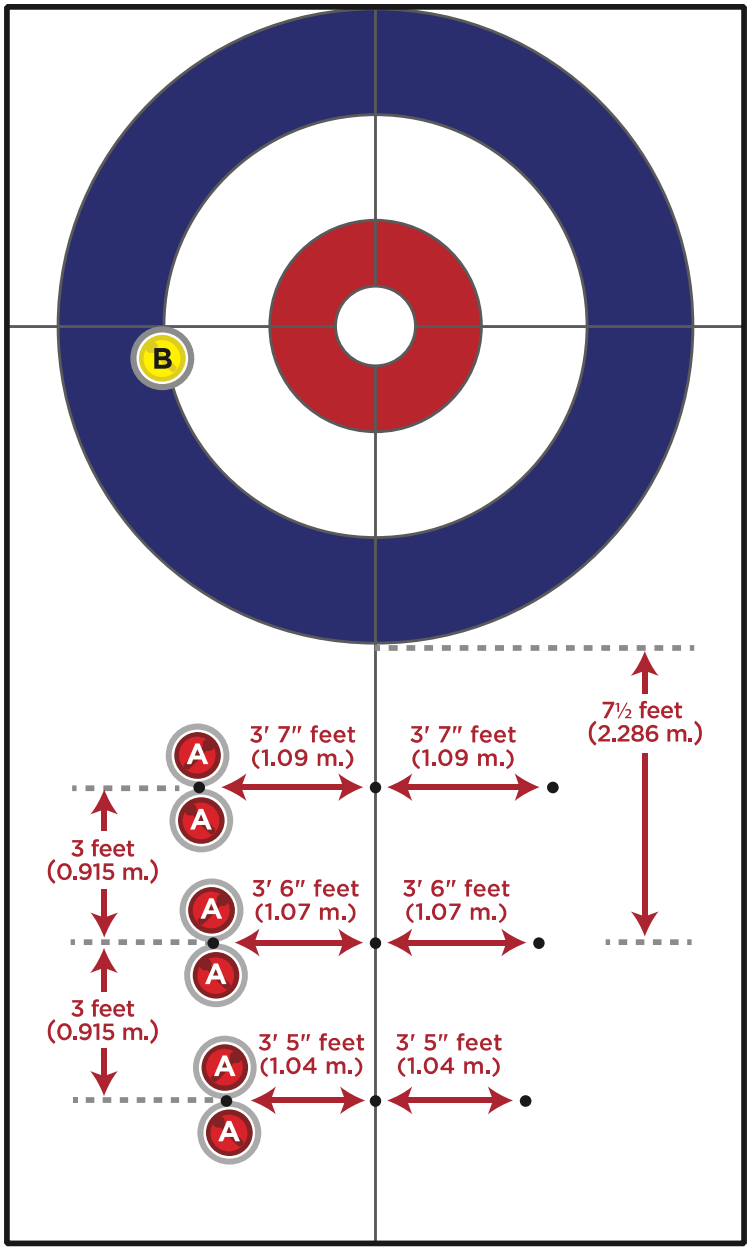

(g) The team having the decision on the placement of the “positioned” stones shall be:

(i) Teams opposing each other in the game shall use the Last Stone Draw (LSD) to determine which team has the decision in the first end. The team with the lesser LSD distance shall have the decision on the placement.

(ii) Following the first end, the team that did not score shall have the decision on the placement.

(iii) If neither team scores in an end, the team that delivered the first stone in that end shall have the decision on placement in the next end.

(h) The team whose “positioned” stone is placed in Position A (in front of the house) shall deliver the first stone in that end, and the team whose “positioned” stone is placed in Position B (in the house) shall deliver the second stone in that end.

(i) While the team is in the process of delivery, the non-delivering player may be anywhere on the ice surface of the team’s sheet. After delivery, either or both players may sweep their delivered stone and any stones set in motion that belong to their team anywhere in front of the tee line at the playing end. This applies during all of the team’s delivered stones, including the LSD.

(j) If a delivery violation occurs, the delivered stone shall be removed from play, and any displaced stones shall be replaced, by the non-offending team, to their positions prior to the violation taking place. Should the infraction not be discovered until after the delivery of a subsequent stone, play continues as if the infraction had not occurred, however, the player that delivered the first stone of the end can deliver a maximum of two stones in that end.

R16. PROHIBITED SUBSTANCES

The use of all performance-enhancing drugs, without therapeutic exemption, whether taken knowingly or otherwise, is unethical and prohibited. If such use occurs the player(s) will be disqualified from the competition, their Member Association will be notified, and it could lead to further suspension.

R17. INAPPROPRIATE BEHAVIOUR

Improper conduct, foul or offensive language, equipment abuse, or wilful damage on the part of any team member is prohibited. Any violation may result in suspension of the offending person(s) by the curling organisation having jurisdiction.

C1. GENERAL

(a) The rules of play for WCF competitions are the current rules of the World Curling Federation (WCF). If there are any modifications, these are explained during the Team Meeting.

(b) The dates of the WCF competitions are determined by the Executive Board of the WCF.

(c) The playing and event schedules are determined by the WCF in consultation with the Host Committee.

(d) Smoking, including e-smoking devices, within the confines of the competition area at WCF competitions is prohibited.

(e) The WCF Anti-Doping rules and procedures, which meet the requirements of the World Anti-Doping Agency are applicable, and published in the WCF Anti-Doping Pamphlet.

(f) Any variation from the recommended sheet measurements must be approved by the WCF.

(g) For WCF Championships, gold medals are awarded to the first placed team, silver medals to the second placed team, and bronze medals to the third placed team. The 5 players (2 for Mixed Doubles, 4 for Mixed) and their coach, receive medals, if they are in attendance and fulfil their team obligations, and are allowed on the podium. For the Olympic Winter Games, Youth Olympic Games and the Paralympic Winter Games, only the players receive medals and are allowed on the podium.

C2. PARTICIPATING TEAMS

(a) Each team is designated by its Association/Federation.

(b) If a designated team is unable or unwilling to participate, the Association/Federation involved nominates another team.

(c) The teams for each event must be declared at least 14 days prior to the start of the competition. Notification of a replacement must be done by the end of the team meeting.

(d) All players at a WCF competition must be bona fide members in good standing of their Associations/Federations.

(e) To be eligible to play in the World Junior Curling Championships (WJCC) and qualifying events, a player must be less than 21 years of age by the end of the 30th day of June of the year immediately preceding the year in which the championship is to take place.

(f) To be eligible to play in the World Senior Curling Championships (WSCC) and qualifying events, a player must be not less than 50 years of age by the end of the 30th day of June of the year immediately preceding the year in which the championship is to take place.

(g) To be eligible to play in the World Wheelchair Curling Championship (WWhCC) and qualifying events, a player must have substantial demonstrable impairments in leg/gait function and use a wheelchair for daily mobility, or qualify within the eligibility criteria.

(h) All players and their coach must attend the Team Meeting. Failure to do so, without approval of the Chief Umpire, results in the forfeit of the last stone advantage for that team in its first game. Only the team players, one coach, a Team Leader, and a translator if necessary, are allowed to attend. For teams in post round robin play, the mandatory one or two team members (players and/or coach) must attend the play-off meetings, or the team will lose the choices (first or second practice, colour of stones, etc.) to which they would normally be entitled.

(i) The team delivery rotation, skip and vice-skip positions, alternate player, and coach are listed on the original team line-up form, and submitted to the Chief Umpire at the end of the Team Meeting. The team leader / national coach / translator, if appropriate, are also listed. A game team line-up form (paper or electronic) must be submitted to the Chief Umpire at least 15 minutes prior to the pre-game practice to either confirm the original team line-up or to indicate a change.

(j) A team must start a competition with four players (two for Mixed Doubles) delivering stones. A team will forfeit each game at the start of the competition, until it can start a game with four qualified players. In extenuating circumstances, and with approval from a panel of three persons (WCF President or Representative, event Technical Delegate, event Chief Umpire) a team may be allowed to start a competition with three players.

(k) While a game is in progress, the coach, the alternate player, and all other team officials are prohibited from communicating with their team or being within the playing area except during specifically designated breaks or a team time-out. This restriction applies to all verbal, visual, written, and electronic communication, including any attempt to signal for the implementation of a team time-out. The coach, the alternate player, and one team official may participate in the pre-event and the pre-game practices, but may not communicate with their team during the LSD. During the game, there shall be no unauthorised communications or broadcasts of any sort from the coach bench to anyone who is not sitting in that designated area. Coaches and other team personnel sitting on the coach bench cannot watch or listen to broadcasts. For any violation the offending person will be removed from the coach's bench for that game.

(l) For the purpose of identification to the media and to the public, teams are referred to by the name under which their Association/Federation competes, and by the name of the skip.

C3. UNIFORMS / EQUIPMENT

(a) All team members wear identical uniforms and appropriate footwear when accessing the field of play for games or practice sessions. The team wears light-coloured shirts and playing jackets/sweaters when assigned stones with light-coloured handles, and wears dark-coloured shirts and playing jackets/sweaters when assigned stones with dark-coloured handles. The colour of these garments shall be registered with the WCF prior to the start of each competition. The team coaches/officials must wear a team or national uniform whenever accessing the field of play. Red is considered to be a dark colour.

(b) Each shirt and jacket/sweater has the player's surname, in 5.08 cm. (2-in.) or larger letters, across the upper back of the garment, and the name under which their Association/Federation competes, in 5.08 cm. (2-in.) or larger letters, across the back above the waist. If desired, a national emblem may also be worn on the back, but only in addition to the name under which the Association/Federation competes, and displayed between that name and the player’s surname. When two or more team members have the same surname, the first letter(s) of their given names are also displayed.

(c) Advertising is permitted on a player's clothing or equipment strictly in accordance with the current guidelines issued by the WCF. The WCF may, in its sole discretion, forbid the use of any clothing or equipment that it feels is unacceptable or unsuitable for WCF competition play. The WCF Dress Code is contained within this book.

(d) A player or coach with an improper uniform shall be denied access to the field of play and the coach bench.

(e) Each player must declare an approved sweeping device at the start of a game, and only that player can use that device for sweeping during the game. Penalty: If a player sweeps with another person’s sweeping device the stone shall be removed from play.

(f) Players may not change their brush heads during a game, unless the Chief Umpire grants special permission. Penalty: If a change is made without permission, the team will forfeit the game.

(g) If an alternate player comes into a game, that player must use the brush head of the player being replaced. Penalty: If a new brush head is brought into the game, the team will forfeit the game.

(h) All field of play equipment used at WCF competitions must meet WCF Equipment Standards, as defined and published on the WCF website. Reasons for equipment being considered non-approved include, but not restricted to: damage to the ice surface, non-conformance with existing rules or standards (i.e. - electronic communication devices), performance testing results that give an unfair advantage, failing to register equipment with the WCF office by the deadline date.

(i) The penalty for using equipment in WCF competitions that does not conform to standards for Competition Equipment established by the WCF:
(i) First team offence during a competition – the player is disqualified from the competition and the team forfeits the game.
(ii) Second team offence during a competition – the team is disqualified from the competition and all players are not permitted to play in WCF competitions for a 12-month period.

C4. PRE-GAME PRACTICE

(a) Prior to the start of every game at WCF competitions, each team is allowed a pre-game practice on the sheet on which it will be playing.

(b) The time and duration of the pre-game practice is given at the Team Meeting.

(c) The schedule for pre-game practices during the round robin will be predetermined as much as possible, based on the criterion that each team has first and second practice an equal number of times. For the round robin games where this cannot be predetermined the winner of a coin toss will have the choice of first or second practice.

(d) In post round robin games, when the Last Stone First End has been pre-determined, the team delivering the last stone in the first end practices first.

(e) If the Chief Ice Technician deems it necessary, the ice will be cleaned, and the slide path re-pebbled, after the pre-game practice.

C5. LENGTH OF GAMES

(a) In competitions in which 10 ends are scheduled, a minimum of 6 ends must be completed in round robin and tie-breaker games, and 8 ends must be completed in play-off games.

(b) In competitions in which 8 ends are scheduled, a minimum of 6 ends must be completed.

C6. GAME TIMING

(a) Each team shall receive 38 minutes of thinking time for a 10 end game and 30 minutes of thinking time for an 8 end game (38 minutes in wheelchair curling, 22 minutes in mixed doubles curling). This time is recorded, and visible to the teams and coaches, throughout the game.

(b) When a team delays the start of a game, the thinking time allotted to each team is reduced by 3 minutes 45 seconds (4 minutes 45 seconds in wheelchair curling, 2 minutes 45 seconds in mixed doubles curling) for each end which was considered completed (Rules of Curling R11(i) apply).

(c) When extra ends are required, the game clocks are reset and each team receives 4 minutes 30 seconds of thinking time for each extra end (6 minutes in wheelchair curling, 3 minutes in mixed doubles curling).

(d) The game and each end starts when the allotted break time expires. The delivering team's game clock will not run during the start of the game/end unless that team is delaying the start (no forward motion from the hack, or the stone not released from the delivery stick), then its game clock will be started. If there is no delay, the first game clock to start in each end will be that of the team delivering the second stone.

(e) Once all of the criteria below are met, the non-delivering team becomes the delivering team, and its game clock is started:

(i) all stones have come to rest or have crossed the back line and

(ii) stones that are displaced due to violations by the delivering team, and require repositioning, are returned to their positions prior to the violation and

(iii) the playing area has been relinquished to the other team, the person in charge of the house has moved behind the back line and the deliverer and sweepers have moved to the sides of the sheet

(f) A team's game clock stops once the stone has reached the tee line (hog line in wheelchair curling) at the delivery end.

(g) A team delivers stones only when its game clock is running or scheduled to be running. Any violation results in the stone being redelivered after any displaced stones have been returned, by the non-offending team, to their positions prior to the violation. The time clock of the offending team will start as soon as any displaced stones have been repositioned and will stop when the redelivered stone reaches the tee line (hog line for wheelchair curling) at the delivering end.

(h) If stones need to be repositioned due to a violation caused by an external force both game clocks are stopped.

(i) Game clocks are stopped at any time an umpire intervenes.

(j) After the teams have agreed on the score for an end, a break occurs, when neither game clock is running. If a measurement is required, the break begins at the completion of that measurement. The length of the break between ends, which may vary due to television requirements or to other external factors, is determined for each competition and explained at the Team Meeting. When a break is of 3 minutes or more, the teams are informed when 1 minute of the break remains. Teams should not deliver the first stone of the next end until less than 10 seconds of the break time remains. The delivering team's game clock will start at the conclusion of the break unless the player is in the process of delivery. The length of the break will normally be:

(i) 1 minute at the completion of each end, except as noted in (j)(ii). Teams cannot meet, or communicate in any way, with a coach, the alternate player or any other team official.

(ii) 5 minutes at the completion of the end that defines the halfway point in the game. Teams are allowed to meet, within the playing area, with any player and team official that is authorised to be on the coach bench for that game.

(k) If a player is allowed to redeliver a stone, the umpire decides if the time required is to be deducted from the game time for that team.

(l) If an end is to be replayed, the game clocks are reset to the time recorded at the completion of the previous end.

(m) If an umpire determines that a team is unnecessarily delaying a game, the umpire notifies the skip of the offending team and, after that notification, if the next stone to be delivered has not reached the tee line (hog line in wheelchair curling) at the delivery end within 45 seconds, the stone is removed from play immediately.

(n) Each team must complete its part of a game within the time given, or forfeit the game. If a stone reaches the tee line (hog line in wheelchair curling) at the delivery end before time expires, the stone is considered delivered in time.

(o) A team whose clock has run due to a timing error (wrong clock running) will have double the agreed error time added back to its clock.

(p) A team whose time clock did not run due to a timing error (no clock running) will not have time deducted from its time clock, but the appropriate amount of time will be added to the other team's time clock.

C7. TEAM TIME-OUTS / TECHNICAL TIME-OUTS

(a) Team time-outs will be allowed at all WCF events, with or without time clocks being used.

(b) Each team may call one 60 second team time-out during each game and one 60 second team time-out in each extra end.

(c) Procedures for a team time-out are as follows:

(i) Only the players on the ice may call a team time-out.

(ii) Team time-outs may be called by any on-ice team player only when that team's game clock is running. Players signal a team time-out by using a "T" hand signal.

(iii) A team time-out (when the game clock is stopped) starts as soon as the time-out is called and consists of 'travel time' to get to the team plus 60 seconds. The amount of travel time will be determined at each event by the Chief Umpire, and is given to all teams, whether or not they have a coach, and whether or not a coach is coming to the field of play.

(iv) Only one person, who is sitting in the designated coaching area and a translator, if required, of the team that called the team time-out is allowed to meet with the team. This person, or persons if a translator is required, must use the designated route to the team. Where walkways are beside the sheet, that person must not stand on the playing ice surface.

(v) The team is notified when there are 10 seconds remaining in the team time-out.

(vi) When the team time-out has expired, the person(s) from the coach's bench must stop conferring with the team and leave the playing area immediately.

(d) A technical time-out may be called by a team to request a ruling, for an injury or in other extenuating circumstances. Game clocks will be stopped during technical time-outs.

C8. STONE ASSIGNMENT / LAST STONE DRAW

(a) The team listed first in the draw schedule for the round robin games will play the stones with the dark coloured handles; the team listed second will play with the stones with the light coloured handles.

(b) For games requiring Last Stone Draws (LSD), at the conclusion of each team's pre-game practice, two stones will be delivered to the tee at the home end, by different players – the first stone with a clockwise and the second with a counter-clockwise rotation. A player (alternate) that delivers an LSD stone does not have to play in that game. Sweeping is allowed (except in wheelchair curling). In Mixed curling each gender must deliver one stone, but the team selects the sweepers independent of their gender.

The first stone will be measured and removed from play before the second stone is delivered. The distances recorded for each stone will be added together to give the team its LSD total for that game. The team with the lesser LSD total will have the choice of delivering the first or second stone in the first end of that game. If the LSD totals for both teams are the same, the individual LSD stones are compared and the best non-equal LSD has the choice of delivering first or second stone in the first end. When both teams have the exact same individual LSD stone distances, a coin toss will be used to determine that choice.

(c) LSD distances will be measured and recorded in the following manner:

(i) All single measurements will be from the tee to the nearest part of the stone, but the LSD distances will be displayed in centimetres as the distance from the tee to the center of the stone.

(ii) The official radius to be used in WCF championships is 14.2 cm.

(iii) To any result measured, the radius of 14.2 cm has to be added. This means that the distance for stones not in the house is 185.4 cm + 14.2 cm = 199.6 cm.

(iv) Stones covering the tee will be measured from two locations (holes) at the edge of the 4ft circle. These two locations make a 90 degree angle with the centre hole and are 0.61 m (2 feet) from the centre hole.

(d) The number of LSD stones, and the number of clockwise and counter-clockwise deliveries for each player, will be determined at each competition depending upon the number of games in the round robin. Based on the Original Team Line-up form, the four players (2 in Mixed Doubles) have to fulfill the minimum number of LSD deliveries. If there is a violation where the minimum requirements are not fulfilled, the appropriate LSD(s) will be recorded as 199.6 cm. LSD stones delivered by the alternate can be combined at the end of the round robin with only one other player, so that this player fulfills the minimum required number of LSD stones.

Round robin games	Number of LSD stones	Minimum for each player
4	8	2 stones, 1 clockwise + 1 counter-clockwise
5	10	2 stones, 1 clockwise + 1 counter-clockwise

6	12	2 stones, 1 clockwise + 1 counter-clockwise
7	14	3 stones, minimum 1 clockwise + minimum 1 counter-clockwise
8	16	3 stones, minimum 1 clockwise + minimum 1 counter-clockwise
9	18	4 stones, 2 clockwise + 2 counter-clockwise
10	20	4 stones, 2 clockwise + 2 counter-clockwise
11	22	4 stones, 2 clockwise + 2 counter-clockwise

(e) For Mixed Doubles each player delivers an equal number of clockwise and counter-clockwise LSD stones. If there are an odd number of games a variation of one rotation per player has to occur.

(f) When round robin play (one group) is used at WCF competitions, with each competing team playing all other teams, first stone in the first end of post round robin games is determined as follows:

(i) The team with the better win/loss record has the choice of playing first or second stone in the first end.

(ii) If the teams have the same win/loss record, the winner of their round robin game has the choice of playing first or second stone in the first end.

(iii) Notwithstanding (i) and (ii), for competitions that use the Page play-off system, the team that wins the 1 versus 2 game has the choice of delivering the first or second stone in the first end of the gold medal game; the team that loses the semi-final game has the choice of delivering the first or second stone in the first end of the bronze medal game.

(g) At WCF competitions when teams play a round robin in separate groups, for the play-off game(s) if the teams are from the same group C8 (f) will be used, and if the teams are from different groups, the team with the lesser DSC has choice of either the first or second practice or the stone handle colour. Then regular LSD procedures (without minimum requirements), will determine which team has the choice of delivering the first or second stone in the first end.

(h) In post round robin games where the team delivering the first stone in the first end has been pre-determined, the team delivering the first stone of the first end has the choice of stone handle colour.

C9. TEAM RANKING PROCEDURE / DRAW SHOT CHALLENGE

(a) During the round robin portion of a competition, teams with the same win-loss record will be listed alphabetically, by their three letter code, and ranked equal.

(b) The following criteria (in order) will be used to rank the teams at the completion of the round robin:

- (i) Teams will be ranked according to their win/loss record;
- (ii) If two teams are tied, the team that won their round robin game will be ranked higher;
- (iii) Where three or more teams are tied, the record of the games between the tied teams shall provide the ranking (should this procedure provide a ranking for some teams but not all, then the record of the games between the remaining teams that are still tied shall determine the ranking);
- (iv) For all remaining teams whose ranking cannot be determined by (i) or (ii) or (iii), ranking is determined using the Draw Shot Challenge (DSC). The DSC is the average distance of all the individual Last Stone Draw stones, which were delivered by a team during the round robin.

Where a total of 11 or fewer individual stones will be delivered, the single least favourable result is automatically eliminated when calculating the average distance. Where more than 11 individual stones will be delivered, the two least favourable results will be eliminated when calculating the average distance.

The team with the lesser DSC receives the higher ranking. If the DSCs are equal then the team with the best non-equal counting LSD receives the higher ranking. In the case where all counting LSDs are equal the team ranked higher in the WCF World Rankings is ranked higher.

(v) When teams compete in different groups and do not qualify for the play-offs, the final ranking will be determined by comparing the DSCs from the teams in all groups with the same ranking, with the best DSC being ranked highest.

(vi) In events where a single loss eliminates a team from the competition, teams eliminated during the same session will be listed alphabetically, by their three letter code, and ranked equal.

(c) When teams are tied for a play-off position, a maximum of one session of tie-breakers will be played to determine which team(s) advances to the play-offs. Team(s) can be eliminated, without playing an extra game, if more than one session of tie-breakers would be required.

(d) When teams are tied for a challengeable position, a maximum of one session of tie-breakers will be played. If more than one session of tie-breakers would be required, team(s) can avoid the challengeable position without winning an extra game.

(e) When teams are tied for a relegation position, a maximum of one session of tie-breakers will be played. If more than one session of tie-breakers would be required, team(s) can avoid or be placed in a relegation position without playing an extra game.

(f) In some circumstances a single game could decide for a team both relegation and challengeable positions. When multiple teams are tied for the challengeable position after tie-breaker games, the WCF team ranking procedure will decide the team to be challenged.

C10. UMPIRES

(a) The WCF appoints a Chief Umpire and the Deputy Chief Umpire(s) for every WCF competition. These officials should include both men and women. Officials are approved by their respective Associations/ Federations.

(b) The umpire determines any matter in dispute between teams, whether or not the matter is covered by the rules.

(c) An umpire may intervene at any time during a competition, and give directions concerning the placement of stones, the conduct of players and adherence to the rules.

(d) The Chief Umpire, when authorised, may intervene at any time in any game and give such directions concerning the conduct of the game as is considered proper.

(e) An umpire may delay a game for any reason and determine the length of the delay.

(f) All matters pertaining to the rules are adjudicated by an umpire. In the event that there is an appeal against an umpire's decision, the decision of the Chief Umpire is final.

(g) The Chief Umpire may eject a player, coach or team official from a game for what is considered to be unacceptable conduct or language. The ejected person must leave the competition area and take no further part in that game. When a player is ejected from a game, an alternate player may not be used in that game, for that player.

(h) The Chief Umpire may recommend to the curling organisation having jurisdiction the disqualification, or suspension, of any player, coach or team official from present or future competitions.

Olympic Winter Games (OWG) – Men & Women

- 10 teams for each gender… 1 team from the Host National Olympic Committee (NOC) + 7 teams from the NOCs which gained the most qualification points from the two previous Men's and Women's World Curling Championships + 2 teams from the Olympic Qualification Event (OQE) which is open to teams which played in any of the four previous Men's or Women's World Curling Championships and did not gain sufficient qualification points to directly qualify for the OWG. Also, the third place teams from the PACC events held during the Olympic cycle will be allocated a spot in the Olympic Qualification Event, if they have not already qualified by their participation in the WCCs.
- Teams placed in one group, playing a round robin to establish the top four ranked teams. If required, one session of tie-breakers will be used to determine those teams.

Play-off System: Semi-finals with 1 v 4 and 2 v 3; winners play in the final (for the gold and silver medals), losers play in the bronze medal game.

Olympic Winter Games (OWG) – Mixed Doubles

- 8 teams… 1 team from the Host National Olympic Committee (NOC) + 7 teams from the NOCs which gained the most qualification points from the two previous World Mixed Doubles Curling Championships.
- Teams placed in one group, playing a round robin to establish the top four ranked teams. If required, one session of tie-breakers will be used to determine those teams.

Play-off System: Semi-finals with 1 v 4 and 2 v 3; winners play in the final (for the gold and silver medals), losers play in the bronze medal game.

Paralympic Winter Games (PWG) – Mixed Gender Teams

- 12 teams… 1 team from the Host National Paralympic Committee (NPC) + 11 teams from the NPCs which gained the most qualification points from the three previous World Wheelchair Curling Championships.
- Teams placed in one group, playing a round robin to establish the top four ranked teams.

Play-off System: Semi-finals with 1 v 4 and 2 v 3; winners play in the final (for the gold and silver medals), losers play in the bronze medal game.

Winter Youth Olympic Games (YOG)

- The National Olympic Committees (NOCs) will collect points from the World Curling Federation's World Junior Curling Championships (WJCC) and World Junior-B Curling Championships (WJBCC). In the event that a specific Challenge event is needed for the Americas, it will be added to the qualification timeline.

The 16 Mixed teams will be selected (based on the highest number of points accumulated) in the following manner:

- 1 team guaranteed to the host National Olympic Committee (NOC)
- 2 teams from North America
- 1 team from South America
- 3 teams from Asia
- 1 team from Oceania
- 8 teams from Europe

The points shall be awarded on the following basis:

WJCC	WJBCC
1st = 20 points	1st = awarded at WJCC
2nd = 18 points	2nd = 8 points
3rd = 17 points	3rd = 6 points
4th = 16 points	4th = 5 points
5th = 15 points	5th = 4 points
6th = 14 points	6th = 3 points
7th = 13 points	7th = 2 points
8th = 12 points	8th = 1 points
9th = 11 points	
10th = 10 points	

World Curling Championships – Men (WMCC) & Women (WWCC)

- 12 teams (qualification process explained on Page 49).
- Teams placed in one group, playing a round robin and one session of tie-breaker games if required, to establish the top four ranked teams.

Play-off System: Page: Team ranked 1st plays against the team ranked 2nd. The winner advances to the final game, the loser goes to the semi-final game. Team ranked 3rd plays against the team ranked 4th. The winner advances to the semi-final game, the loser goes to the bronze medal game. The winner of the semi-final advances to the final, the loser goes to the bronze medal game.

World Junior Curling Championships (WJCC) – Junior Men & Junior Women

- 10 teams for each gender… 1 team from the Host Association/Federation, top 6 highest ranked Association/Federation from the previous year's WJCC and top 3 teams from the previous WJBCC.
- Teams placed in one group, playing a round robin and one session of tie-breaker games if required, to establish the top four ranked teams.

Play-off System: The same system used for the Men's and Women's World Curling Championships.

World Junior-B Curling Championships (WJBCC) – Junior Men & Junior Women

- Open to junior teams from all WCF Member Associations that have not already qualified for the next WJCC. Three teams will qualify from this event.
- If 1-10 teams enter they will be placed in one group, playing a round robin to establish the top four ranked teams.

Play-off System: The same system used for the Men's and Women's World Curling Championships.

- If more than 10 teams enter they will be placed into groups which meet the schedule requirements. The groups play a round robin to establish the teams required for the quarter-final play-offs.

Play-off System : At the end of the round robin series, and if necessary one session of tie-breaker games, there must be a ranking for 1st, 2nd, 3rd and 4th (if two groups); 1st, 2nd and 3rd (if three groups); 1st and 2nd (if four groups).

Where there are three groups the 1st and 2nd ranked teams qualify directly for the quarter-finals, as well as the 3rd ranked team with the best Draw Shot Challenge (DSC) result. The other two 3rd ranked teams play a qualification game to decide the last team entered into the quarter-finals.

The winners of the quarter-finals play in the semi-finals.

The losers of the semi-finals play in the Bronze Medal game.

The winners of the semi-finals play in the Gold Medal game.

Winter University Games (WUG) – Men & Women University Students

- 10 teams for each gender… 1 team from the Host Association + 9 teams according to FISU entry regulations.
- Teams placed in one group, playing a round robin and one session of tie-breaker games if required, to establish the top four ranked teams.

Play-off System: Semi-finals with 1 v 4 and 2 v 3; winners play in the final (for the gold and silver medals), losers play in the bronze medal game.

World Wheelchair Curling Championship (WWhCC) – Mixed Gender Teams

- 10 teams … 1 team from the Host Association + 7 teams from the Associations which qualified from the previous WWhCC + 2 teams from the Associations which qualified through the World Wheelchair-B Curling Championship (WWhBCC).
- Teams placed in one group, playing a round robin and one session of tie-breaker games if required, to establish the top four ranked teams.

Play-off System: The same system used for the Men's and Women's World Curling Championships.

World Wheelchair-B Curling Championship (WWhBCC) – Mixed Gender Teams

- Open to teams from Associations that have not already qualified for the next WWhCC. Two teams will qualify from this event.
- If 1-10 teams enter they will be placed in one group; if more than ten teams enter they will be placed in two groups. The group(s) play a round robin to establish the teams required for the play-offs.

Play-off System: a) if one group: The same system used for the Men's and Women's World Curling Championships. The 1st and 2nd place teams qualify for the next WWhCC.

b) if two groups: 1st place in both groups qualify for the semi-finals; qualification games A2 v B3 and A3 V B2 winners qualify for semi-finals; semi-finals and finals; the 1st and 2nd place teams qualify for the next WWhCC.

World Mixed Doubles Curling Championship (WMDCC)

Open number of entries (qualification process and play-off system explained Page 50-51)

World Mixed Curling Championship (WMxCC)

Open number of entries (qualification process and play-off system explained Page 50-51)

World Senior Curling Championships (WSCC) – Men & Women

Open number of entries (qualification process and play-off system explained Page 50-51)

Pacific-Asia Curling Championships (PACC) – Men & Women

Open to teams from the Pacific-Asia Curling Zone (qualification process and play-off system explained on Page 52).

Hosting Zone: **Pacific-Asia**	1 team	To the Host Association / Federation.
	1 team (Pacific-Asia)	Winner of the Pacific-Asia Curling Championship (PACC), an annual Pacific-Asia Zone competition, the winner (or, if the winner is the hosting Assn/Fed, the runner-up) qualifies for the WCC.
	2 teams (Americas)	The Americas Zone Association/Federation that finished highest at the previous WCC is automatically qualified. The 2nd ranked American Assn/Fed, from the previous WCC, will be involved with any "challenges" that might come from other WCF Members in the Americas. If there is no challenge, that Assn/Fed is automatically re-qualified. If a challenge event is necessary, the winner of that event will qualify for the next WCC.
	8 teams (Europe)	The 8 European Zone Assn/Fed that earned their entries through a qualification system that is determined by the World Curling Federation.

Hosting Zone: **America**	1 team	To the Host Association / Federation.
	2 teams (Pacific-Asia)	Winner and Runner-up Assn/Fed from the Pacific-Asia Curling Championship, an annual Pacific-Asia Zone competition.
	1 team (Americas)	The Americas Zone Assn/Fed from the previous WCC that is not hosting the next WCC will be involved with any "challenges" that might come from other WCF Members in the Americas. If there is no challenge, that Assn/Fed is automatically re-qualified. If a challenge event is necessary, the winner qualifies for the next WCC.
	8 teams (Europe)	The 8 European Zone Assn/Fed that earned their entries through a qualification system that is determined by the World Curling Federation.

Hosting Zone: **Europe**	1 team	To the Host Association / Federation.
	2 teams (Pacific-Asia)	Winner and Runner-up Assn/Fed from the Pacific-Asia Curling Championship, an annual Pacific-Asia Zone competition.
	2 teams (Americas)	The Americas Zone Association/Federation that finished highest at the previous WCC is automatically qualified. The 2nd ranked American Assn/Fed, from the previous WCC, will be involved with any "challenges" that might come from other WCF Members in the Americas. If there is no challenge, that Assn/Fed is automatically re-qualified. If a challenge event is necessary, the winner of that event will qualify for the next WCC.
	7 teams (Europe)	The 7 European Zone Assn/Fed that earned their entries through a qualification system that is determined by the World Curling Federation.

QUALIFICATION - WORLD JUNIOR CHAMPIONSHIPS (WJCC)

All Zones	1 team	To the Host Association / Federation.
	6 teams	The top six (6) teams, excluding the host, from the previous WJCC.
	3 teams	The top three (3) teams from the previous WJBCC.

WORLD SENIORS (WSCC), WORLD MIXED DOUBLES (WMDCC) & WORLD MIXED CURLING CHAMPIONSHIP (WMxCC)

- An Association's team is made up of curlers who are bona fide members of that Association and who fulfil the eligibility criteria for playing for that Association.
- The World Curling Federation reserves the right to adjust the system of play.

ENTRIES	PLAYING SYSTEM	PLAY-OFFS	FINAL RANKINGS
1-10 Entries	**ONE** Group Round robin + One session of tie-breakers if required + Play-offs	Olympic play-off system with top four teams as shown in the chart on page 67	Teams ranked 1- 10 as per WCF ranking procedure
11- 20 Entries **Group-A** 1,4,5,8,9,12,13, 16,17,20 **Group-B** 2,3,6,7,10,11,14, 15,18,19 Rankings from the previous event. MAs that did not play in that event will be ranked (at the end of the list) according to the WCF World Ranking	**TWO** Groups Group round robins + One session of tie-breakers if required to determine top 3 teams in each group + Qualification games, semi-finals and medal games	Top teams qualify for the semi-finals; qualification games A2 v B3 and A3 v B2 to determine last teams in the semi-finals	Teams in each group will be ranked as per WCF ranking procedure DSC results are used for the final ranking of the teams that did not qualify for the play-offs, when comparing teams with the same rank but from a different group Final ranking will be established from 1 - 20
21-30 Entries **Group-A** 1,6,7,12,13,18, 19,24,25,30 **Group-B** 2,5,8,11,14,17, 20,23,26,29	**THREE** Groups Group round robins + One session of tie-breakers if required to determine the top 3 teams in each group	Quarter-finals as shown in the chart on page 68 When qualification games are played, the losers will be ranked equal and listed alphabetically by 3-	Teams in each group will be ranked as per WCF ranking procedure DSC results are used for the final ranking of the teams that did not qualify

Group-C 3,4,9,10,15,16, 21,22,27,28 Rankings from the previous event. MAs that did not play in that event will be ranked (at the end of the list) according to the WCF World Ranking.	+ One qualification game to determine the last team in the quarter-finals + Quarter-finals, semi-finals and medal games	letter country code. When quarter-final games are played the losers will be ranked equal (5th) and listed alphabetically by 3-letter country code.	for the play-offs or the qualification games, when comparing teams with the same rank but from a different group Final ranking will be established from 1 – 30
31-40 Entries **Group-A** 1,8,9,16,17,24,25,32, 33,40 **Group-B** 2,7,10,15,18,23,26,31, 34,39 **Group-C** 3,6,11,14,19,22,27,30, 35,38 **Group-D** 4,5,12,13,20,21,28,29, 36,37 Rankings from the previous event. MAs that did not play in that event will be ranked (at the end of the list) according to the WCF World Ranking.	**Four** Groups Group round robins + One session of tie-breakers if required to determine the top 3 teams in each group + Four qualification games to determine the last team in the quarter-finals + Quarter-finals, semi-finals and medal games	Qualification games: A2 v B3, A3 v B2, C2 v D3 and C3 v D2 Quarter-finals as shown in the chart on page 68 When qualification games are played, the losers will be ranked equal and listed alphabetically by 3-letter country code. When quarter-final games are played the losers will be ranked equal (5th) and listed alphabetically by 3-letter country code.	Teams in each group will be ranked as per WCF ranking procedure DSC results are used for the final ranking of the teams that did not qualify for the play-offs or the qualification games, when comparing teams with the same rank but from a different group Final ranking will be established from 1 – 40

Qualification – World Curling Championships (WCC)

World Curling Federation (WCF) determines the System of Play

One team qualifying:

ENTRIES	PLAYING SYSTEM	PLAY-OFFS	QUALIFICATION
6 or fewer Entries	One group Double round robin + One session of tie-breakers if required to determine top 4 teams + Play-offs	Olympic play-off system with top four teams as shown in the chart on page 67	Winner of the gold medal qualifies for the WCC (if winner is the next WCC hosting MA, then silver medal winner qualifies for the WCC) Teams ranked as per WCF ranking procedure
7 or more Entries	One group Single round robin + One session of tie-breakers if required to determine top 4 teams + Play-offs		

Two teams qualifying:

ENTRIES	PLAYING SYSTEM	PLAY-OFFS	QUALIFICATION
6 or fewer Entries	One group Double round robin + One session of tie-breakers if required to determine top 4 teams + Play-offs	Olympic play-off system with top four teams as shown in the chart on page 67	Winner of the gold and silver medal qualify for the WCC (if gold or silver medal winner is the next WCC hosting MA, then bronze medal winner qualifies for the WCC) Teams ranked as per WCF ranking procedure
7 or more Entries	One group Single round robin + One session of tie-breakers if required to determine top 4 teams + Play-offs		

EUROPEAN CURLING CHAMPIONSHIPS (ECC)

- The European Curling Championship qualifies European teams to the World Curling Championships.
- If the next WCC is in Europe - the host Association has a guaranteed place + the 6 highest ranked Associations from the A Division + the winner of the "ECC World Challenge".
- If the next WCC is outside of Europe - the top 7 highest ranked Associations from the A-Division + the winner of the "ECC World Challenge" qualify for the WCC.
- "ECC World Challenge" - the last team from A-Division to qualify plays a best-of-three challenge against the winner of the B-Division (if either of those teams are the host of the next WCC the next team in line will play the challenge). The winner qualifies for the WCC.
- The World Curling Federation reserves the right to adjust the system of play. In the event of no entries for the C-Division, B9 + B10 Women and B15 + B16 Men remain in the B-Division.

ENTRIES	PLAYING SYSTEM	PLAY-OFFS	FINAL RANKINGS
A Division **Men and Women** **10 Teams** **A1 - A8** **+ B1 + B2** Rankings taken from the previous ECC	One Group: Round robin + Tie-breakers (one session) if required to determine top 4 teams + Play-offs	Olympic play-off system with top four teams as shown in the chart on page 67	Teams ranked A1- A10 as per WCF ranking procedure. **A9 + A10 are relegated to B Division for next ECC** The last team from A-Division to qualify plays winner B1 in World Challenge - best of three games
B Division **Women** **10 Teams** **A9 + A10** **+ B3 - B8** **+ C1 + C2** Rankings taken from the previous ECC	One Group: Round robin + Tie-breakers (one session) if required to determine top 4 teams + Play-offs	Olympic play-off system with top four teams as shown in the chart on page 67	Teams ranked B1- B10 as per WCF ranking procedure. **B1 + B2 are promoted to A Division for next ECC** **B9+B10 are relegated to C Division** Winner B1 plays the last team from A-Division to qualify in World Challenge - best of three games
B Division **Men** 16 teams **A9 + A10** **+ B3 - B14** **+ C1 + C2** Rankings taken from the previous ECC	Two Groups of 8 teams: Group round robins + Tie-breakers (one session) if required to determine top 3 teams + Play-offs	1st ranked teams advance directly to the semi-finals; A2 v B3 and A3 v B2 to determine last teams in semi-finals. For the semi-finals: If 2 teams from each group then A1 plays the B qualifier and B1 plays the A qualifier. If 3 teams from one group then the 1st ranked team of that group plays the 3rd ranked team from the same group, and the 1st ranked team of the other group plays the 2nd ranked team from the group that qualified 3 teams. The relegation for the ECC	Teams ranked B1- B16 as per WCF ranking procedure. **B1 + B2 are promoted to A Division for next ECC** **B15 + B16 are relegated to C Division** Winner B1 plays the last team from A-Division to qualify in World Challenge - best of three games

		B-Division men is determined in the following manner: MA7 v MB7 - winner is not relegated and MA8 v MB8 - loser is relegated Loser (MA7 v MB7) v winner (MA8 v MB8) - winner is not relegated, loser is relegated There is no tie-breaker game(s) before those relegation games and the ranking is solely done by the results of the round robin.	
C Division **Men** **B15+B16**+ other entries **C Division** **Women** **B9+B10**+ other entries	**ONE** Group if 11 or less teams and **TWO** groups if more than 12 teams. Group round robin + Tie-breakers if required + Play-offs	Ranking determined for 1st to 4th place, using one session of tie-breakers if necessary. 1 v 2 winner gold medal and qualifies for ECC “B”; and 3 v 4 game. Loser 1 v 2 plays winner 3 v 4, winner silver medal and qualifies for ECC “B”, loser bronze medal.	Teams ranked as per WCF ranking procedure. **C1 + C2 are promoted to B-Division for next ECC**

CHALLENGE EVENT

The 2nd ranked Americas Zone Association from the previous WCC, provided they are not hosting the next Championship, will be subject to any "challenges" that might come from other Associations in the Americas Zone.

If the 2nd ranked Association is hosting the next Championship, then the other Americas Zone Association from the previous Championship will be subject to any "challenges" which might come from other Associations in the Americas Zone.

The Challenge Event will have the following criteria:

1. The Association that is subject to the challenge will be determined at the conclusion of each WCC based upon the final rankings, and also considering which Association has been awarded the right to host the next WCC.

2. Other Associations in the Americas Zone that wish to challenge for a place in the WCC must submit a registration form to the WCF Secretariat by the deadline date of 31 July of the year preceding the next WCC. By the same date the Association that is subject to the challenge must also submit a registration form to the WCF Secretariat to show they are willing to host and participate in the challenge event. The registration forms will be sent by the WCF to the Americas Zone Associations prior to 1 May.

3. If there is only one Association that registered by the deadline date, then that Association is automatically qualified for the next WCC. If no teams register, the vacant spot will be given to the European or Pacific Zone in a manner determined by the WCF Executive Board.

4. The Association that is being challenged will host the challenge event. The venue and the dates of the event must be approved by the WCF prior to 31 October of the year preceding the next WCC.

5. The challenge event must be played during the month of January preceding the next WCC, unless another suitable date is agreed between the WCF, host and challengers.

6. Any Association that must host more than one challenge is not required to have those challenges at the same venue and same dates.

7. The Chief Umpire and Chief Ice Technician are appointed by the Host Association, subject to the approval of the WCF. The Host Association is responsible for their expenses.

8. Each Association involved in a WCC challenge is responsible for the Per Diem and accommodation expenses for its own teams and officials.

9. The WCF will not reimburse any travel expenses for the WCC challenge.

Playing System:

Two teams registered – a "best-of-five" series
Day One – Team Meeting + Official Training + 1 game
Day Two – 2 games
Day Three – 2 games (if required)

Three teams registered – a "double round robin"
Day One – Team Meeting + Official Training + Games 1 v 2 and 1 v 3
Day Two – Games 2 v 3 and 1 v 2 and 1 v 3
Day Three – Game 2 v 3 and Tie-breakers (if required)

Four teams registered - a "double round robin"
Day One – Team Meeting + Official Training + Draws 1 and 2
Day Two – Draws 3 and 4 and 5
Day Three – Draw 6 and Tie-breakers (if required)

Five or six teams registered – a "single round robin" and a 1 v 2 play-off
Day One – Team Meeting + Official Training + Draws 1 and 2
Day Two – Draws 3 and 4 and 5
Day Three –Tie-breakers (if required) and the 1 v 2 play-off

Time table:

- Conclusion of WCCs – challenged Associations declared
- 1 May – prior to this date registration forms sent out by WCF Secretariat
- 31 July – deadline date for registration (forms returned to the WCF Secretariat)
- 31 October – prior to this date the hosting venue and dates approved by WCF
- January (or agreed date) – the Challenge

MINIMUM STANDARDS

Required by Member Associations for Entry into World Curling Championships

1. **Curling Season**: A minimum of three months.

2. **Standard of Play**: The World Curling Federation may judge if the standard of play of a Member Association is adequate to enter the World Curling Championships.

3. **Qualification**: No Member Association, whose Annual Subscription and arrears to the World Curling Federation are not paid by 1 September of any year, is eligible to enter the World Curling Championships the following year.

ELIGIBILITY

1. Athletes are a national of the country they are representing – their residence can be anywhere.

   or

   Athletes are a resident of the country they are representing for a period of at least two consecutive years immediately prior to the start of the competition.

2. If an athlete has represented a country in any WCF competition, or played in an international qualifier for a WCF competition, that athlete may not represent another country in any WCF competition or WCF international qualifier until the athlete fulfills one of the above criteria **AND** a period of two consecutive years has elapsed.

3. This eligibility does not apply to competing in the Olympic / Paralympic Winter Games, which are governed by the regulations of the International Olympic / Paralympic Committee.

4. The WCF Executive Board shall resolve any dispute relating to the determination of the WCF Member Association that an athlete may represent in a WCF competition.

RANKING												GAMES	Number of Games
1	2	3	4	5	6	7	8	9	10	11	12		
QX	QX	QX	X	X								4 v 5; winner + QXs ranked by head-to-head and if necessary DSC in the round robin; loser 5th	1
QX	QX	X	X	X	X							3 v 6 + 4 v 5; winners + QXs and losers ranked by head-to-head and if necessary DSC in the round robin	2
QX	X	X	X	X	X	X						2 v 7 + 3 v 6 + 4 v 5; winners + QX and losers ranked by head-to-head and if necessary DSC in the round robin	3
X	X	X	X	X	X	X	X					1 v 8 + 2 v 7 + 3 v 6 + 4 v 5; winners and losers ranked by head-to-head and if necessary DSC in the round robin	4
X	X	X	X	X	X	X	X	XE				1 v 8 + 2 v 7 + 3 v 6 + 4 v 5; 9th eliminated and ranked 9th; winners and losers ranked by head-to-head and if necessary DSC in the round robin	4
X	X	X	X	X	X	X	X	XE	XE			1 v 8 + 2 v 7 + 3 v 6 + 4 v 5; 9th and 10th eliminated and ranked 9th and 10th by head-to-head; winners and losers ranked by head-to-head and if necessary DSC in round robin	4
X	X	X	X	X	X	X	X	XE	XE	XE		1 v 8 + 2 v 7 + 3 v 6 + 4 v 5; 9th, 10th and 11th eliminated and ranked 9th, 10th and 11th by head-to-head and if necessary DSC; winners and losers ranked by head-to-head and if necessary DSC in round robin	4
Q	QX	QX	X	X								4 v 5; winner + QXs ranked by head-to-head and if necessary DSC in the round robin; loser 5th	1
Q	QX	X	X	X	X							3 v 6 + 4 v 5; winners + QX and losers ranked by head-to-head and if necessary DSC in the round robin	2
Q	X	X	X	X	X	X						2 v 7 + 3 v 6 + 4 v 5; winners and losers ranked by head-to-head and if necessary DSC in the round robin	3
Q	X	X	X	X	X	X	XE					2 v 7 + 3 v 6 + 4 v 5; winners and losers ranked by head-to-	3

RANKING												GAMES	Number of Games
1	2	3	4	5	6	7	8	9	10	11	12		
												head and if necessary DSC in the round robin; 8th eliminated and ranked 8th	
Q	X	X	X	X	X	X	XE	XE				2 v 7 + 3 v 6 + 4 v 5; 8th and 9th eliminated and ranked 8th and 9th by head-to-head; winners and losers ranked by head-to-head and if necessary DSC in the round robin	3
Q	X	X	X	X	X	X	XE	XE	XE			2 v 7 + 3 v 6 + 4 v 5; 8th, 9th and 10th eliminated and ranked 8th, 9th and 10th by head-to-head and if necessary DSC; winners and losers ranked by head-to-head and if necessary DSC in the round robin	3
Q	X	X	X	X	X	X	XE	XE	XE	XE		2 v 7 + 3 v 6 + 4 v 5; 8th, 9th, 10th and 11th eliminated and ranked 8th, 9th, 10th and 11th by head-to-head and if necessary DSC; winners and losers ranked according to head-to-head and if necessary DSC in round robin	3
Q	X	X	X	X	X	X	XE	XE	XE	XE	XE	2 v 7 + 3 v 6 + 4 v 5; 8th, 9th, 10th, 11th and 12th eliminated and ranked 8th, 9th, 10th, 11th and 12th by head-to-head and if necessary DSC; winners and losers ranked by head-to-head and if necessary DSC in the round robin	3
Q	Q	QX	X	X								4 v 5; winner + QX ranked by head-to-head in the round robin; loser 5th	1
Q	Q	X	X	X	X							3 v 6 + 4 v 5; winners and losers ranked by head-to-head in the round robin	2
Q	Q	X	X	X	X	XE						3 v 6 + 4 v 5; winners and losers ranked by head-to-head in the round robin; 7th eliminated and ranked 7th	2
Q	Q	X	X	X	X	XE	XE					3 v 6 + 4 v 5; winners and losers ranked by head-to-head in the round robin; 7th and 8th eliminated and ranked 7th and 8th by head-to-head	2
Q	Q	X	X	X	X	XE	XE	XE				3 v 6 + 4 v 5; winners and losers ranked by head-to-head in the round robin; 7th, 8th and 9th eliminated and ranked 7th, 8th and 9th by head-to-head and if necessary DSC in the round robin	2

RANKING												GAMES	Number of Games
1	2	3	4	5	6	7	8	9	10	11	12		
Q	Q	X	X	X	X	XE	XE	XE	XE			3 v 6 + 4 v 5; winners and losers ranked by head-to-head in the round robin; 7th, 8th, 9th and 10th eliminated and ranked 7th, 8th, 9th and 10th by head-to-head and if necessary DSC in the round robin	2
Q	Q	X	X	X	X	XE	XE	XE	XE	XE		3 v 6 + 4 v 5; winners and losers ranked by head-to-head in the round robin; 7th, 8th, 9th, 10th and 11th eliminated and ranked 7th, 8th, 9th, 10th and 11th by head-to-head and if necessary DSC in round robin	2
Q	Q	X	X	X	X	XE	XE	XE	XE	XE	XE	3 v 6 + 4 v 5; winners and losers ranked by head-to-head in the round robin; 7th, 8th, 9th, 10th, 11th and 12th eliminated and ranked 7th, 8th, 9th, 10th, 11th and 12th by head-to-head and if necessary DSC in the round robin	2
Q	Q	Q	X	X								4 v 5; winner 4th; loser 5th	1
Q	Q	Q	X	X	XE							4 v 5; winner 4th; loser 5th; 6th eliminated and ranked 6th	1
Q	Q	Q	X	X	XE	XE						4 v 5; winner 4th; loser 5th; 6th and 7th eliminated and ranked 6th and 7th by head-to-head	1
Q	Q	Q	X	X	XE	XE	XE					4 v 5; winner 4th; loser 5th; 6th, 7th and 8th eliminated and ranked 6th, 7th and 8th by head-to-head and if necessary DSC in the round robin	1
Q	Q	Q	X	X	XE	XE	XE	XE				4 v 5; winner 4th; loser 5th; 6th, 7th, 8th and 9th eliminated and ranked 6th, 7th, 8th and 9th by head-to-head and if necessary DSC in the round robin	1
Q	Q	Q	X	X	XE	XE	XE	XE	XE			4 v 5; winner 4th; loser 5th; 6th, 7th, 8th, 9th and 10th eliminated and ranked 6th, 7th, 8th, 9th and 10th by head-to-head and if necessary DSC in round robin	1
Q	Q	Q	X	X	XE	XE	XE	XE	XE	XE		4 v 5; winner 4th; loser 5th; 6th, 7th, 8th, 9th, 10th and 11th eliminated and ranked 6th, 7th, 8th, 9th, 10th and 11th by head-to-head and if necessary DSC in the round robin	1
Q	Q	Q	X	X	XE	XE	XE	XE	XE	XE	XE	4 v 5; winner 4th; loser 5th; 6th, 7th, 8th, 9th, 10th, 11th and 12th eliminated and ranked 6th, 7th, 8th, 9th, 10th, 11th and 12th by	1

RANKING												GAMES	Number of Games
1	2	3	4	5	6	7	8	9	10	11	12		
												head-to-head and if necessary DSC in the round robin	

Q = Qualified

QX = Tied but qualified

X = Tied – Tie-breaker games

XE = Tied but eliminated

TIE-BREAKERS FOR RELEGATION

RANKING												GAMES	Number of Games
1	2	3	4	5	6	7	8	9	10				
							X	X				8 v 9; winner 8th; loser 9th	1
						XT	X	X				7 through by ranking; 8 v 9 with loser relegated (9th), final ranking of 7 and winner to be determined by head-to-head in the round robin	1
					XT	XT	X	X				6 and 7 through by ranking; 8 v 9 with loser relegated (9th); final ranking of 6, 7 and winner by head-to-head and if necessary DSC in round robin	1
				XT	XT	XT	X	X				5, 6 and 7 through by ranking: 8 v 9 with loser relegated (9th); final ranking of 5, 6, 7 and winner by head-to-head and if necessary DSC in round robin	1
							X	X	XR			8 v 9; loser relegated (9th)	1
						X	X	X	X			7 v 10 and 8 v 9 with losers relegated, final ranking of winners and losers by head-to-head in the round robin	2
					XT	X	X	X	X			6 through by ranking; 7 v 10 and 8 v 9 with losers relegated and ranked by head-to-head in round robin; final ranking of 6 and winners by head-to-head and if necessary DSC in the round robin	2
				XT	XT	X	X	X	X			5 and 6 through by ranking; 7 v 10 and 8 v 9 with losers relegated and ranked by head-to-head in round robin; final ranking of 5, 6 and winners by head-to-head and if necessary DSC in the round robin	2

X = Tied – Tie-breaker Game XT = Tied but through XR = Tied but relegated

TIE-BREAKERS FOR QUALIFIERS AND RELEGATION

RANKING										GAMES	Number of Games
1	2	3	4	5	6	7	8	9	10		
			X	X	XN	XN	X	X		4 v 5 (winner Q 4th); loser and 6 and 7 do not qualify nor are relegated, they are ranked with the winner of the following game by head-to-head and if necessary DSC in the round robin, 8 v 9 with loser relegated (9th)	2
		X	X	X	X	XN	X	X		3 v 6 and 4 v 5 with winners ranked by head-to-head in round robin; losers plus 7 do not qualify nor are relegated, they are ranked with the winner of the following game by head-to-head and if necessary DSC in the round robin; 8 v 9 with loser relegated (9th)	3
	X	X	X	X	X	X	X	X		2 v 7 and 3 v 6 and 4 v 5 with winners ranked by head-to-head and if necessary DSC in the round robin; losers do not qualify nor are relegated, they will be ranked with the winner of the following game by head-to-head and if necessary DSC in the round robin; 8 v 9 with loser relegated (9th)	4
X	X	X	X	X	X	X	X	XR		1 v 8 and 2 v 7 and 3 v 6 and 4 v 5 with winners and losers ranked according to head-to-head and if necessary DSC in round robin; 9th relegated by ranking (9th)	4
			X	X	XN	X	X	X	X	4 v 5 (winner Q 4th); loser plus 6 do not qualify nor are relegated they will be ranked with the winners of the following games by head-to-head and if necessary DSC in the round robin; 7 v 10 and 8 v 9 with losers relegated and ranked according to head-to-head in the round robin	3
		X	X	X	X	X	X	X	X	3 v 6 and 4 v 5 with winners ranked by head-to-head in round robin; losers do not qualify nor are relegated, they will be ranked with the winner of the following games by head-to-head and if necessary DSC in the round robin; 7 v 10 and 8 v 9 with losers relegated and ranked according to head-to-head in round robin	4
	X	X	X	X	X	X	X	X	XR	2 v 7 and 3 v 6 and 4 v 5 with winners ranked by head-to-head and if necessary DSC in the round robin;	4

RANKING										GAMES	Number of Games
1	2	3	4	5	6	7	8	9	10		
										losers do not qualify nor are relegated, they will be ranked with the winner of the following game by head-to-head and if necessary DSC in round robin; 8 v 9 with the loser relegated (9th)	

X = Tied - Tie-breaker Games XN = Tied; not qualified or relegated (no TB game)

XR = Tied but relegated

OLYMPIC PLAY-OFF SYSTEM

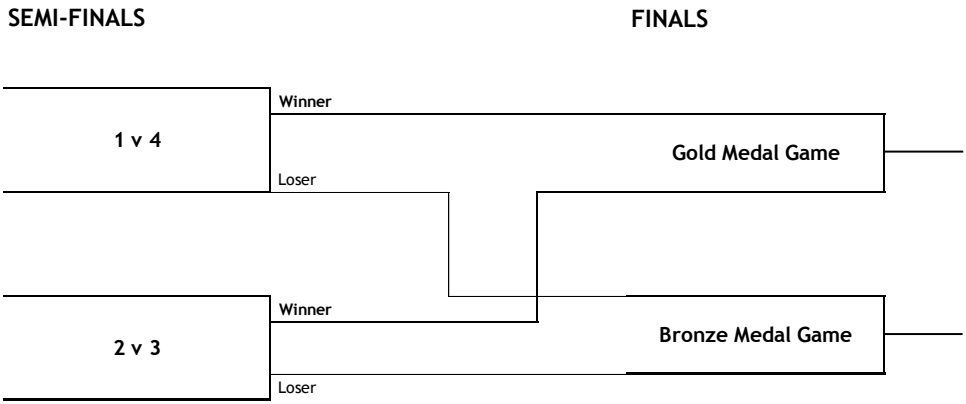

PAGE PLAY-OFF SYSTEM

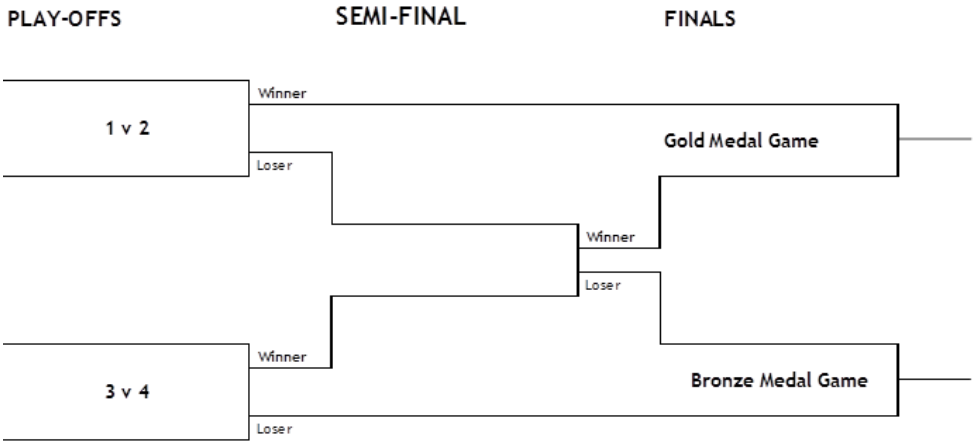

QUARTER-FINALS PLAY-OFF SYSTEM

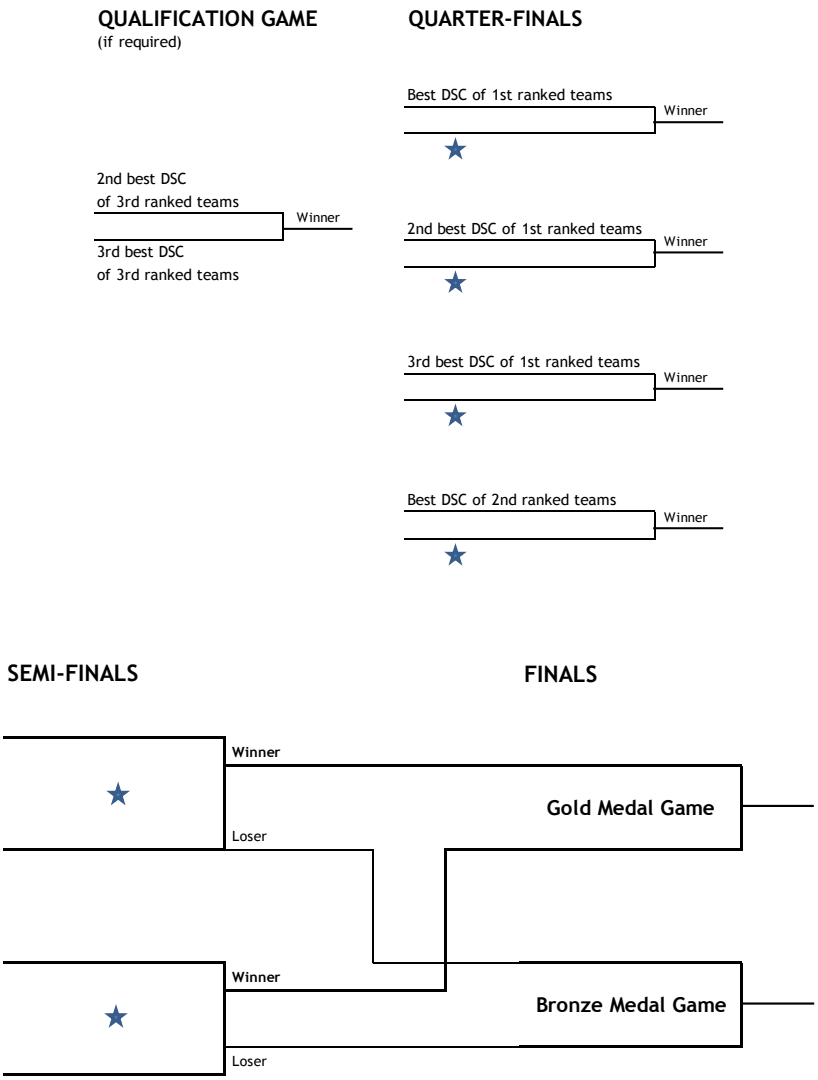

★ Where possible, opponents will be selected on the basis of not having teams from the same group compete against each other. If necessary, the opponents will be determined by a "draw from the hat" (random selection) at the post round robin team meeting.

DRESS CODE

Items	Policy
Shoes	No restrictions, personal preference
Socks	If worn under the trousers, no restrictions
Leg Warmers	Includes socks worn over the trousers, same for the complete team
Trousers	Same logos/crests/colour, can be different brands
Belts	If showing, all the same
Skirts	Matching colour, same colour of tights, can be a team mixture of skirts and trousers
Undershirts	Can be visible (long sleeves under short sleeves) but outfit must have colour coordination
Shirts	Can be tucked in or out
Vests	Okay, must have colour coordination (name, Association, etc.), one or more can wear
Jackets	As per WCF guidelines, Association, player's name, etc.
Two-tone Jackets	Predominately one colour, but can have an accent colour
Hooded Jackets	Hood cannot be showing, rolled up or tucked inside
Hats	One or more can wear, more than 1 all the same, peaks forward, logos = Association or the Event. Applies to the team and persons on the coach bench
Scarves	One or more can wear, more than 1 all the same
Head & Wrist Bands	One or more can wear, more than 1 all the same, large logos = Association or the Event
Jewellery	No restrictions, personal preference
Gloves	No restrictions, personal preference
Braces	Cannot be visible, worn under a shirt or jacket
Crests	No previous event crests are allowed Approval of sponsor crests has to be sought or renewed for each event

GLOSSARY OF TERMS

Alternate	A registered, non-playing member of the team who is eligible to substitute for one of the competing players.
Arithmetically Eliminated	The status of a team that has a combined total of stones left to be delivered and/or remaining in play that is less than the number needed to produce either a tie or a win.
Away End	The end of the sheet to which the first stone of a game is delivered.
Back Board / Bumper	Material (e.g. foam or wood) placed at the end (perimeter) of each sheet of ice.
Back House Weight	The speed given to a stone at delivery so that it will just reach the back of the house.
Back Line	A line at the back of the house, extending across the width of the sheet, which is parallel to and located 1.829 m. (6 ft.) from each tee line.
Back of the House	The area within the house that lies between the tee line and the back line.
Biter	A stone that just touches the outer edge of the outside circle of the house.
Blank End	An end resulting in no score for either team.
Bonspiel	A curling competition or tournament.
Brush (Broom)	See definition: Sweeping Device.
Brush Head	The part of the brush that comes in contact with the ice surface when sweeping.
Button	The small circle at the centre of the house.
Burned Stone	A stone in motion touched by a player or any part of a player's equipment.
Centre Line	The line dividing the playing surface down the middle. It joins the midpoints of the tee lines and extends 3.658 m. (12 ft.) beyond the centre of each tee line.
Circles	See definition: House.
Competition	Any number of teams playing games to determine a winner.
Come Around	A shot that curls behind another stone.
Counter	Any stone in or touching the house and is considered a potential point.
Courtesy Line	A line indicating where the sweepers from the non-delivering team are allowed to stand in order to ensure that an umpire can view the hog line and to prevent distraction of a delivering player.
Curl	The curved path of a stone as it travels down the sheet of ice.

Debris	Any substance, including frost, snow or material originating from brushes, shoes or clothing.
Delivery End	The end of the sheet from which the stones are being delivered.
Delivering Team	The team that is currently in control of the playing area, and scheduled to deliver the next stone.
Delivery	The motion a player makes when playing a curling stone.
Delivery Stick	A device that attaches to the handle of the stone and acts as an extension of the arm/hand during the delivery process.
Displaced Stone	A stationary stone that has been moved to a new location.
Divider	Material (e.g. foam or wood) used to separate the sheets of curling ice.
Double Take-out	A stone that removes two of the opponent's stones from play.
Draw	A stone which stops inside or in front of the house.
Draw Shot Challenge (DSC)	The calculation made by taking the average distance of the Last Stone Draws (LSD), excluding the least favourable LSD(s), and used, if required, to assist in the determination of ranking after a round robin.
Draw Weight	The momentum required for a delivered stone to reach the house at the playing end.
Electronic Hog Line Device	A device that indicated if a stone was released by a player before the stone reached the hog line at the delivery end.
End	A portion of a curling game that is completed when each team has thrown eight stones and/or the score has been decided.
Equipment	Anything that is worn or carried by a player.
Extra End	An additional end played to break a tie at the end of regulation play.
External Force	An occurrence not caused by either team.
First Player	The first curler on a team to deliver two stones in each end.
Fourth Player	The fourth curler on a team to deliver two stones in each end.
Free Guard Zone (FGZ)	The area at the playing end, between the hog line and the tee line, but excluding the house.
Freeze	A form of a draw shot that stops directly up against another stone.
Front House Weight	The momentum required for a delivered stone to reach the front part of the house at the playing end.
Forfeit	If a team cannot start or continue a game the other team will win that game. The final game score will be recorded as W-L.
Game	Two teams playing a specified number of ends to determine a winner.
Guard	A stone that is placed in a position so that it may protect another stone.

Hack	The foot-hold at each end of the ice which is used by players (except wheelchair curlers) to start the delivery of a curling stone.
Hack Line	A small line 0.457 m. (1 ft. 6 in.) parallel to the tee line, at each end of the centre line.
Hack Weight	The momentum required for a delivered stone to reach the hack at the playing end.
Handle	The part of a curling stone that a player grips in order to deliver.
Hammer	A term used to describe the stone that will be the last stone delivered in that end.
Heavy	A stone delivered with a greater speed than necessary.
Hit	A take-out. Removal of a stone from the playing area by hitting it with another stone.
Hit and Roll	A stone that knocks an opponent's stone out of play, and then rolls to another position in play.
Hog Line	A line extending across the width of the sheet that is parallel to and located 6.40 m. (21 ft.) from each tee line.
Hog Line Violation	A stone that is removed from play for the end, because it was not released before it reached the hog line at the delivery end.
Hogged Stone	A stone that is removed from play for the end, because after being delivered, it did not come to rest completely beyond the inside edge of the hog line at the playing end.
Home End	The end of the sheet from which the first stone of a game is delivered.
House	The area within the concentric circles at each end of the sheet.
Hurry	A command, which instructs players to sweep harder.
Ice Surface	The complete ice area that is within the perimeters of the curling sheet.
In the Process of Delivery	The sequence of play that begins when the delivering player is in position to start the delivery and concludes when the stone is released.
In-turn	The rotation applied to the handle of a stone by a right-handed curler, which causes the stone to rotate in a clockwise manner.
Last Stone Draw (LSD)	A contest conducted at the conclusion of a team's pre-game practice in which each team delivers two stones by different players, the first stone with a clockwise and the second with a counter-clockwise rotation, to the tee at the home end. The resulting distances are measured and used to determine which team has the choice of delivering the first or second stone in the first end.
Lead	The first player on a team to deliver two stones in each end.
Measuring Device	An instrument that determines which stone is closer to the centre of the house (Tee), or whether a stone is in the house.

Moving Stone	A stone in motion either from a delivery or from being struck by another stone.
Original Position of a Stone	The location on the ice where a stone rested prior to its being displaced.
Out-of-play Position	The location of a stone that is not in play (e.g. one which has touched a side line, or crossed the back line).
Out-turn	The rotation applied to the handle of a stone by a right-handed curler, which causes the stone to rotate in a counter-clockwise manner.
Pebble	The water droplets applied to a sheet of ice before commencing play. These droplets freeze, which then reduces the friction between the ice and the stones.
Peel	A shot designed to remove a guard.
Playing End	The end of the sheet to which the stones are being delivered.
Point	At the completion of an end, one is awarded to a team for each of its own stones located in or touching the house that is closer to the tee than any stone of the opposition.
Port	An opening, or gap, between stones.
Positioned Stones	In Mixed Doubles games, the two stones that are placed in designated positions prior to the start of each end.
Raise	A type of draw which bumps forward another stone.
Raise Take-out	A delivered stone hits a stationary stone, which then starts to move and it hits a third stone out of play.
Rings	See definition: House.
Rock	See definition: Stone.
Roll	The sideways movement of a curling stone after it has struck a stationary stone.
Rotation	The direction of turn of a stone (clockwise or counter-clockwise).
Round Robin	A competition in which each team plays all the other teams.
Score	The number of points received by a team in an end.
Scoring	A team scores one point for each of its stones that is within the house and closer to the tee than any stone of the opposing team.
Second Player	The second curler on a team to deliver two stones in each end.
Sheet	The specific ice surface upon which a curling game is played.
Shot (stone or rock)	At any time during an end, the stone closest to the tee.
Side Line	A line placed at the side (perimeter) of each sheet of ice.
Skip	The player who directs play for the team.
Slider	Slippery material placed on the sole of the sliding shoe, which makes it easier to slide on the ice.

Spare	See definition: Alternate.
Stationary Stone	A stone in play which is not in motion.
Stone	Also known as a rock, a curling stone is made of granite and is delivered by the players in a curling game.
Stone Set in Motion	A stationary stone hit by another stone which causes it to move.
Sweeping	The action of moving a broom or brush back and forth in front of the path of a moving stone to clean or polish the ice surface.
Sweeping Device	A device used by players to sweep/clean the ice.
Swingy Ice	The condition of the ice or stones causing the stones to have excessive curl.
Take-out	Removal of a stone from the playing area by hitting it with another stone.
Team	Four players competing together. A team may include a fifth player (to act as an alternate) and a coach. Mixed Doubles have one male and one female player, and may include a coach.
Team Time-out	A 60 second on-ice meeting between a team and their coach.
Technical Time-out	Stoppage of play called by a team or umpire for a ruling, injury, or in other extenuating circumstances etc.
Tee	The exact centre of the house.
Tee Line	A line extending across the width of the sheet that passes through the centre of the house parallel to the hog line and backline.
Third Player	The third curler on a team to deliver two stones in each end.
Tie-breaker	A game that is played to break a tied ranking at the end of the round robin, so that the correct number of teams is determined for the play-offs, challenge and relegation positions.
Top of the House	The area within the house that lies between the hog line and the tee line.
Umpire	The person(s) responsible for the conduct of the game in accordance with the rules.
Vice-Skip (Mate or Acting Skip)	The player who directs play for the team when it is the skip's turn to deliver.
Weight	The amount of force/speed given to the stone during the delivery.
Wheelchair Lines	Two lines that run from the hog line to the outermost edge of the nearest circle of the house. Wheelchair curlers are allowed to start their delivery with the stone placed between these lines.

INTERNATIONAL SKATING UNION

SPECIAL REGULATIONS
& TECHNICAL RULES

SINGLE & PAIR SKATING

and

ICE DANCE
2016

as accepted by the 56th Ordinary Congress
June 2016

In the ISU Constitution and Regulations, the masculine gender used in relation to any physical person (for example, Skater/Competitor, Official, member of an ISU Member etc. or pronouns such as he, they, them) shall, unless there is a specific provision to the contrary, be understood as including the feminine gender.

See also the ISU Constitution
and General Regulations

INTERNATIONAL SKATING UNION

Regulations laid down by the following Congresses:

1st	Scheveningen	1892	29th	Bergen	1961
2nd	Copenhagen	1895	30th	Helsinki	1963
3rd	Stockholm	1897	31st	Vienna	1965
4th	London	1899	32nd	Amsterdam	1967
5th	Berlin	1901	33rd	Maidenhead	1969
6th	Budapest	1903	34th	Venice	1971
7th	Copenhagen	1905	35th	Copenhagen	1973
8th	Stockholm	1907	36th	Munich	1975
9th	Amsterdam	1909	37th	Paris	1977
10th	Vienna	1911	38th	Davos	1980
11th	Budapest	1913	39th	Stavanger	1982
12th	Amsterdam	1921	40th	Colorado Springs	1984
13th	Copenhagen	1923	41st	Velden	1986
14th	Davos	1925	42nd	Davos	1988
15th	Luchon	1927	43rd	Christchurch	1990
16th	Oslo	1929	44th	Davos	1992
17th	Vienna	1931	45th	Boston	1994
18th	Prague	1933	46th	Davos	1996
19th	Stockholm	1935	47th	Stockholm	1998
20th	St. Moritz	1937	48th	Québec	2000
21st	Amsterdam	1939	49th	Kyoto	2002
22nd	Oslo	1947	50th	Scheveningen	2004
23rd	Paris	1949	51st	Budapest	2006
24th	Copenhagen	1951	52nd	Monaco	2008
25th	Stresa	1953	53rd	Barcelona	2010
26th	Lausanne	1955	54th	Kuala Lumpur	2012
27th	Salzburg	1957	55th	Dublin	2014
28th	Tours	1959	56th	Dubrovnik	2016

I. SPECIAL REGULATIONS
SINGLE & PAIR SKATING
ICE DANCE

INDEX

General			**Page**
Rule No.	300	Disciplines and content of Single & Pair Skating and Ice Dance	9

REGULATIONS FOR COMPETITIONS
IN SINGLE & PAIR SKATING AND ICE DANCE

A. General

Rule No.	335	Segments of competition	9
	336	Competition personnel	10
	342	Required rinks	10
	343	Music reproduction system	11
	344	Competition schedule	11
	345	Communications during competitions	12
	349	Program Content Sheet	12
	350	Call to the start	12
	351	Behavior of Competitors and Officials	12
	352	ISU Judging System - scoring systems	13
	353	ISU Judging System - determination and publication of results	15
	354	Team Results by ISU Member	19
	355	World ranking systems	20
	358	Awards	20
	365	Exhibitions during Competitions	20
	366	Protocol	20
	367	New systems	21
	368	Comments to the public	22

B. ISU Championships – Special Rules

Rule No.	375	Allotment	23
	376	Schedule/Duration of Championships	23
	377	Participation in Championships	23
	378	Entries ISU Championships	23
	379	Music titles	25
	381	ISU Event Coordinator and Regional Event Coordination Assistants	26
.	393	Presentation of medals	27

Rule No	394	Medals	27
	396	Advertisements of ice shows	27

C. Olympic Winter Games

Rule No.	400	Entries to the Olympic Winter Games	28
	401	Appointment of Officials to the Olympic Winter Games	29
	402	Panels of Judges for the Olympic Winter Games	30
	403	Draws at the Olympic Winter Games	33

REGULATIONS FOR OFFICIALS IN SINGLE & PAIR SKATING AND ICE DANCE

A. Nomination and appointments of Officials

Rule No.	410	Process for nomination and appointment of Officials	34
	411	General requirement for nomination and appointment of Officials	37
	412	Specific requirements for nomination and appointment of Referees	40
	413	Specific requirements for nomination and appointment of Judges	42
	414	Specific requirements for nomination and appointment of Technical Controllers	44
	415	Specific requirements for nomination and appointment of Technical Specialists	46
	416	Specific requirements for nomination and appointment of Data & Replay Operators	49
	417	ISU Seminars	50

B. Appointment of Officials to Competitions

Rule No.	420	Appointment of Officials to International Competitions (general)	52
	421	Appointment of Officials to ISU Championships (special Rule)	53
	422	Appointment of Officials to the Olympic Winter Games (special Rule)	54

C. Duties and powers of Officials

Rule No	430	General and specific duties and powers	55
	431	Meetings at Competitions for Referees and Judges	59
	432	Meetings at Competitions for Technical Panels	60
	433	Reports	61

D. Evaluation of service by Officials

Rule No.	440	Evaluation of service by Officials	63

REGULATIONS FOR EXHIBITIONS

Rule No.	450	Exhibitions	72

II. TECHNICAL RULES
SINGLE & PAIR SKATING / ICE DANCE

GENERAL TECHNICAL RULES IN SINGLE & PAIR SKATING AND ICE DANCE

			Page
Rule No.	500	Definition of the skate blade and clothing	74
	501	Clothing	74
	502	Duration of skating	74
	503	Falls and Interruptions	76
	504	Marking of Short Program/Short Dance and Free Skating/Free Dance	76

TECHNICAL RULES FOR COMPETITIONS IN SINGLE & PAIR SKATING AND ICE DANCE

A. General

	511	Announcement of entries and panels of Officials	81
	512	Draws	81
	513	Draws for starting orders	81
	514	Warm-up periods	84
	515	Allowance of a delayed start or restart	85

B. ISU Championships – Special Technical Rules

Rule No.	520	Draws for Competitors	88
	521	Judges draws	90

Tables

	I.	Size of starting order groups	95
	II.	Size of warm-up groups	96

III. TECHNICAL RULES
SINGLE & PAIR SKATING

A. Single and Pair Skating Elements			**Page**
Rule No.	610	Requirements to elements of Single and Pair Skating and Illegal Elements/Movements	97
B. Single Skating			
Rule No.	611	Short Program Singles	99
	612	Free Skating Singles	103
C. Pair Skating			
Rule No.	619	Requirements to elements of Pair Skating	106
	620	Short Programs Pairs	109
	621	Free Skating Pairs	112

IV. TECHNICAL RULES
ICE DANCE

A. Ice Dance definitions **Page**

Rule No.	701	Axis	116
	702	Patterns	116
	703	Series of steps	117
	704	Steps, Turns and Movements	118
	705	Dance Holds	125
	706	Musical definitions	127

B. Pattern Dances

Rule No.	707	Introduction	128
	708	Requirements and marking	129

C. Short Dance

Rule No.	709	Short Dance	134

D. Free Dance

Rule No.	710	Free Dance	136

E. Announcement and draw of Pattern Dances and announcement of requirements for Short Dance and Free Dance

Rule No.	711		139

I. SPECIAL REGULATIONS
SINGLE & PAIR SKATING
ICE DANCE

Rule 300
Disciplines and content of Single & Pair Skating and Ice Dance

1. The disciplines of Single & Pair Skating, i.e. Ladies Single Skating, Men Single Skating and Pair Skating (one Lady and one Man), as defined in Article 39, paragraph 3.b) (i) of the ISU Constitution, consist of:
   a) Short Program
   b) Free Skating

2. The discipline of Ice Dance, i.e. one Lady and one Man, as defined in Article 39, paragraph 3.b) (ii) of the ISU Constitution, consists of:
   a) Pattern Dances
   b) Short Dance
   c) Free Dance

Rules 301 – 334 (reserved)

REGULATIONS FOR COMPETITIONS IN SINGLE & PAIR SKATING AND ICE DANCE

A. General

Rule 335
Segments of competitions

A. Segments of Single & Pair Skating competitions

1. ISU Championships, Olympic Winter Games, Winter Youth Olympic Games, Qualifying Competition for the Olympic Winter Games and ISU Grand Prix Events and Final (Senior and Junior) in Single & Pair Skating shall consist of Short Program and Free Skating.
2. International Competitions in Single & Pair Skating shall consist of:
   a) Short Program and Free Skating
   b) Free Skating (Senior only)

B. Segments of Ice Dance competitions

1 ISU Championships, Olympic Winter Games, Winter Youth Olympic Games, Qualifying Competition for the Olympic Winter Games and ISU Grand Prix Events and Final (Senior and Junior) in Ice Dance shall consist of Short Dance and Free Dance.

2. International Competitions in Ice Dance shall consist of:
   a) Short Dance and Free Dance
   b) Pattern Dance(s) and Free Dance
   c) Free Dance (Senior only)

C. Order of Segments and skating in Segments

a) Short Program/Short Dance or Pattern Dance(s) must be skated before Free Skating/Free Dance;
b) Ladies, Men, Pairs and Ice Dance Couples must skate separately;
c) Each Skater/Pair/Couple must skate the Short Program/Short Dance, Free Skating/Free Dance or Pattern Dance alone on the ice surface.

Rule 336
Competition personnel

The following competition personnel designated by the Organizing Committee is necessary:

a) an announcer to summon the Competitors and to read the scores and results;
b) up to two (2) timekeepers;
c) supplementary competition personnel (if necessary) to guarantee the orderly conduct of the competition in other respects.

Rules 337 – 341 (reserved)

Rule 342
Required rinks

1. The available skating area for the Short Program/Short Dance, Free Skating/Free Dance and Pattern Dance(s) must be rectangular and if possible, shall measure sixty (60) meters in length and thirty (30) meters in width, but not larger, and not less than fifty-six (56) meters in length and twenty-six (26) meters in width. Officials shall not be seated on the ice surface. The Judges and the Referee will be seated at the rinkboard and the Technical Panel will be seated in an elevated position, if possible.

2. For International Competitions, at least one covered and preferably heated rink is required. For ISU Championships, the Olympic Winter Games and the Winter Youth Olympic Games, two covered and closed rinks are required. For ISU Events, the Olympic Winter Games, the Winter Youth Olympic Games and the Qualifying Competition for the Olympic Winter Games the ice rinks must be heated.

Rule 343
Music reproduction system

1. All Competitors shall furnish competition music of excellent quality on CD or in any other approved format.
   a) The music covers/discs must show the exact running time of the music (not skating time), which shall be certified by the Competitor and by the coach, when submitted at the time of registration;
   b) Each program (Short Program/Free Skating/Pattern Dance when music is provided by the Couple/Short Dance/Free Dance) must be recorded on one track and on a separate disc;
   c) Competitors must provide a back-up drive for each program.

2. All music used for competitive events must be played on high quality electronic recorders, e.g. MP3 Player or similar, computer or CD Player, one or two of which shall be used during the competition. The organizer shall furnish, for each rink used for the competition and practice, adequate facilities for the reproduction and playback of music. The facilities to be provided by the organizer must be set forth in the Announcement of the Competition.

3. Precaution must be taken to prevent frequency and/or voltage variations.

4. The volume level of the music as determined by the Medical Commission in either the practice or competition rinks must not exceed 85-90-dB Sound Pressure Level in any part of the arena.

Rule 344
Competition schedule

1. When the event is comprised of two Segments, it is recommended that the competition should last at least two days, but no more than three consecutive days.
2. At the option of the Organizers the Short Program/Short Dance or Pattern Dance(s) can be skated either on a preceding day or on the same day as the Free Skating/Free Dance (except ISU Junior Grand Prix and Grand Prix Events and Finals and ISU Championships) provided there is an interval of at least four hours after the ending of the Short Program/Short Dance or Pattern Dance(s).
3. Events should not begin before 9.00 a.m and should be planned to finish by 11.00 p.m.

Rule 345
Communications during competitions

All official communications during ISU Championships, the Olympic Winter Games, the Winter Youth Olympic Games and International Competitions must be published in English.

Rules 346 – 348 (reserved)

Rule 349
Program Content Sheet

Each Skater/Pair/Couple, shall present a Program Content Sheet i.e. an official form indicating the planned elements for each Segment of the competition, except Pattern Dances.

Rule 350
Call to the start

1. Prior to each performance, the names of those about to compete must be clearly called on the ice and in the dressing-rooms.

2. Each Skater/Pair/Couple must take the starting position of each Segment of the competition (Short Program/Short Dance, Free Skating/Free Dance or Pattern Dance) at the latest thirty (30) seconds after he/they are called to the start. If this time has expired and the Skater/s has/have not yet taken the starting position, the Referee shall apply a deduction (deducted from the final score) as per Rule 353, paragraph 1. n). If sixty (60) seconds started from the call to the start have expired and the Skater/s has/have not yet taken the starting position, he/they will be considered as withdrawn.

Rule 351
Behavior of Competitors and Officials

1. Encouragement or advice of any kind, especially prompting during skating, by Officials, is not permitted.

2. Before skating the Short Program/Short Dance, Free Skating/Free Dance or Pattern Dance, Competitors are not allowed to bow to the spectators. Bows may be made to thank the public for applause given at the end the performance.

Rule 352
ISU Judging System - scoring systems

1. The results must be calculated electronically at ISU Events, Olympic Winter Games, Winter Youth Olympic Games and Qualifying Competition to the Olympic Winter Games.
2. The organizing ISU Member, in the case of International Competition other than ISU Events, or the ISU, in the case of ISU Events, the Olympic Winter Games and Winter Youth Olympic Games, is responsible for the accuracy of the results including the computer software program and shall provide experienced, competent operators who shall be responsible for the entry of data into the computer and the generating of official results.
3. Online marking and display system
   a) Officials screen

      Each Judge and the Referee operate independently, and the decisions of the Technical Controller and Technical Specialists are recorded by the Data Operator, using a touch screen or similar system which could be equipped with a built-in video replay system approved by the ISU. The input by each individual Judge, the Referee and the Technical Panel are transferred into a calculation computer, including, if possible, a complete back-up system.

   b) Electronic marks display/scoreboard

      In ISU Championships an electronic marks' display system must be used. The results display information (scoreboard) must show place in previous Segment (Short Program/Short Dance), current place in this Segment and overall current place. Additional information on scores, of interest for the public, is displayed as decided by the Council.
4. Off-line marking

   When online marking is not available, the Officials shall operate as follows:

   a) With not more than five (5) Judges and no Technical Panel (Technical Controller, Technical Specialist):
      (i) The panel of Judges shall be split in the "Technical Judge(s)" (maximum two (2) Judges) and the "Performance Judges" (if possible not more than three (3) Judges).
      (ii) The "Technical Judge(s)" shall record all Elements and award the GOE for each Element, the "Performance Judges" shall award the Program Components only. The "Performance Judges" shall operate independently, while the "Technical Judges" may confer to agree on decision about the identified elements.

(iii) One of the “Technical Judges” shall act as Referee. He shall alone decide upon the deductions under the obligations of Referees and Technical Panels.

b) With a Technical Panel (Technical Controller, Technical Specialist and, if possible, Assistant Technical Specialist) or with more than five (5) Judges:

(i) With more than five (5) Judges but no Technical Panel, paragraph a) (i) above shall apply.

(ii) A communication chain needs to be established (headsets etc.) between the “Performance Judges”/Judges and the “Technical Judge(s)”/Technical Panel. With the communication chain it is guaranteed that the “Performance Judges”/Judges operating in the panel are aware of the identified and called Elements.

(iii) The “Technical Judge(s)”/Technical Panel shall record all Elements and apply the deductions under the obligation of Technical Panels. The Judges shall award the GOE for each Element as well as the Program Components.

(iv) One of the “Technical Judges”/Judges shall act as Referee unless a separate Referee has been assigned to the event. He or the Referee alone shall apply the deduction under the obligations of Referees.

c) The "Officials’ Marking Sheets" need to be collected after each performance. The data is either transferred into a computer to calculate results or the calculation is done manually. The calculation of results shall be done according to Rule 353.

Rule 353
ISU Judging System - determination and publication of results

1. Basic Principles of Calculation

   a) Every Section of a Pattern Dance, every Element (i.e. Required Element of the Short Program/Short Dance/Free Dance or Element of the Well Balanced Free Skating Program) has a certain Base Value indicated in the Scale of Value (SOV) chart published in an ISU Communication.

   b) Each Judge identifies for each Section/Element one of the grades of execution. Each grade has its own positive or negative numerical value also indicated in the SOV chart.

   c) The panel's Grade of Execution (GOE) is determined by calculating the trimmed mean of the numerical values of the Grades of Execution awarded by Judges.

   d) The trimmed mean is calculated by deleting the highest and the lowest values and calculating the average of the remaining values. In the case when there are fewer than five (5) Judges, the highest and lowest values are not deleted from the calculation.

   e) This average will become the final Grade of Execution of an individual Section/Element. The panel's GOE is rounded to two decimal places.

   f) The panel's score for each Section/Element is determined by adding the trimmed mean GOE of this Section/Element to its Base Value.

   g) The panel's scores for all the Sections/Elements are added giving thus the Total Elements Score.

   h) In Single & Pair Skating:

      i) Jump combinations are evaluated as one unit by adding the Base Values of the jumps included and applying the GOE with the numerical value of the most difficult jump.

      ii) Jump sequences are evaluated as one unit by adding the Base Values of the two highest value jumps, multiplying the result by 0.8 and after that applying the GOE with the numerical value of the most difficult jump. The factored Base Value of the jump sequence will be rounded to two decimal places.

      iii) Any additional element or elements exceeding the prescribed numbers will not be counted in the result of a participant. Only the first attempt (or allowed number of attempts) of an Element will be taken into account.

      iv) <u>In the Short Program</u> <u>and Free Skating</u> of Single Skating the Base Values (but not the GOEs) for all jump Elements started in the second half of the program will be multiplied by a special factor 1.1

in order to give credit for even distribution of difficulties in the program. Each factored Base Value for all jump Elements performed in the second half of the Program will be rounded to two decimal places. The second half commences in the middle of the required time without taking into account plus or minus 10 seconds allowance. However in cases of up to 3 minutes interruptions (Rule 515) the factor 1.1 will be used only for jump elements which were started in the second half of the program, but prior to the interruption.

i) In Ice Dance:

   i) Combination Lifts are evaluated as one unit by adding the Base Values of the two first executed Types of Short Lifts and then applying the GOE. The GOE of the Combination Lift is equal to the sum of the numerical values of the corresponding GOE of these two first executed Types of Short Lifts.

   ii) Combination Step Sequences are evaluated as one unit by adding the Base Values of the One Foot Step Sequence and the Step Sequence and then applying the GOE. The GOE of the Combination Step Sequence is equal to the sum of the numerical values of the corresponding GOE of these two Groups of the Step Sequences. (valid beginning with season 2018/19)

j) Each Judge also marks the Program Components on a scale from 0.25 to 10 with 0.25 points increments.

k) The panel's points for each Program Component are obtained by calculating the trimmed mean of the Judges results for that Program Component. The trimmed mean is calculated in the manner described above in sub-paragraph d).

l) The trimmed mean of each Program Component is rounded to two decimal places.

m) The panel's points for each Program Component are then multiplied by a factor as follows (same for Junior and Senior):

Men:	Short Program:	1.0	Free Skating:	2.0
Ladies:	Short Program:	0.8	Free Skating:	1.6
Pairs:	Short Program:	0.8	Free Skating:	1.6
Ice Dance:	Short Dance:	0.8	Free Dance:	1.2
	Pattern Dance:	0.7		

The factored results are rounded to two decimal places and added. The sum is the Program Component Score.

n) Deductions are applied for certain violations specified in the Regulations as follows:

Violation:	**As per:**	**Points:**
Program time	Rule 502	- 1.0 up to every 5 seconds lacking or in excess
Illegal Element/Movement	Rule 504, paragraph 2	- 2.0 per violation
Costume and prop	Rule 501, paragraph 1	- 1.0 per program
Part of the costume/decoration falls on the ice	Rule 501, paragraph 2	- 1.0 per program
Fall	Rule 503, paragraph 1	▪ Senior Single Skating: -1.0 for the first and second fall, -2.0 for the third and fourth fall, -3.0 for the fifth and any further falls. ▪ Junior Single Skating: -1.0 for every Fall. ▪ Pair Skating and Ice Dance: -1.0 for every Fall by one partner and -2.0 for every Fall by both partners.
Late start	Rule 350, paragraph 2	- 1.0 for start between 1 and 30 seconds late
Interruption in performing the program	Rule 503, paragraph 2	For every Interruption of: ▪ more than 10 seconds up to 20 seconds: - 1.0 ▪ more than 20 seconds up to 30 seconds: - 2.0 ▪ more than 30 seconds up to 40 seconds: - 3.0
Interruption of the program with allowance of up to three (3) minutes to resume from the point of interruption.	Rule 515	- 5.0 per program
Choreography restrictions	Ice Dance: Rules 709, paragraphs 1.d), g), h) and j) and 710, paragraphs 1.f), h) and j)	-1.0 per program
Extra Elements (Ice Dance only)	Required Elements and principles of calling published in ISU Communications	- 1.0 per violation

Music requirements (Ice Dance only)	Rules 707, paragraph 5, 709, paragraph 1.c)(i) and (ii), and 710, paragraph 1.c)	- 2.0 per program
Tempo specifications (Ice Dance only)	Rules 707, paragraph 5 and 709, paragraph 1.c)(iii)	- 1.0 per program
Dance Lift exceeding permitted duration (Ice Dance only)	Rule 704, paragraph 16	- 1.0 per Dance Lift

2. Determination of results in each Segment of the Competition

   a) The Total Segment Score for each Skater/Pair/Couple in each Segment of a competition (Short Program/Short Dance, Free Skating/Free Dance or Pattern Dance(s)) is calculated by adding the Total Elements Score and the Program Component Scores, subtracting any deductions for violations described in sub-paragraph 1.n).

   b) In Ice Dance, for events with two (2) Pattern Dances, the Total Score for each dance will be multiplied by a factor of 0.5.

   c) The Skater/Pair/Couple with the highest Total Segment Score is placed first, the Skater/Pair/Couple with the next highest Total Segment Score is placed second and so on.

   d) If two or more Skaters/Pairs/Couples have the same result, the Total Elements Score will break the tie in the Short Program/Short Dance and the Pattern Dance(s). The Program Components Score will break the tie in the Free Skating/Free Dance. If these results are also equal, the Skaters/Pairs/Couples concerned will be considered as tied.

   e) For any Segment where a Segment factor is applied, the factored Segment Scores are rounded to two (2) decimal places.

3. Determination of the final result

   a) The Total Segment Score of the Short Program/Short Dance or Pattern Dance(s) and Free Skating/Free Dance are added and the result constitutes the Final Score of a Skater/Pair/Couple in a competition. The Skater/Pair/Couple with the highest Final Score is first etc.

   b) In cases of ties after the Final Score the Skater/Pair/Couple with the highest score for the last skated Segment is placed first etc. If there is a tie in the highest score, the better placement will decide the better place. In Ice Dance, if two Pattern Dances are to be skated, both dances are even in value. There are no tie-breaking criteria.

   c) If there is a tie for this Segment, the placement of the previously skated Segment will count for the better place etc. If there is no previous Segment, Skaters/Pairs/Couples are tied.

4. Publication of results

a) In the publication of the overall results of an event, the eliminated Competitors (Competitors who did not qualify for the next Segment either due to the insufficient scores or due to withdrawal) shall be listed following the Competitors who have successfully finished the competition and such eliminated Competitors will be listed in order of their placement after their last completed Segment.

Disqualified Competitors will lose their placements and be officially noted in the intermediate and final results as disqualified (DSQ). Competitors having finished the competition and who initially placed lower than the disqualified Competitor(s) will move up accordingly in their placement(s).

b) Following each Segment, the Total Elements Score, the panel's points obtained in each Program Component, the Program Component Score, the deductions and the Total Segment Score of every Skater/Pair/Couple must be published.

c) Following each Segment a printout indicating the Base Values of all the Elements and the GOEs and points for the Program Components from every Judge will be issued. <u>For all figure skating competitions, Championships, Events and Olympic Winter Games, the Judges names and their respective scores will be published.</u>

d) The final result must be published as soon as possible after the conclusion of the event. This must include for each Skater/Pair/Couple:

- the final place;
- separately, the placing in each Segment of a competition.

e) On conclusion of the event the total points (Final Score) of each Skater/Pair/Couple must be published.

Rule 354
Team Results by ISU Member

The relevant ISU Bodies shall provide and publish in an ISU Communication a calculation system to establish Team Results by ISU Member in International Competitions. This system shall be based on the results of the individual competitions in each disciplines, namely Ladies Single Skating, Men Single Skating, Pair Skating and Ice Dance. It may be implemented as an option by organizing ISU Members of International Senior, Junior and Novice Competition and may be duly announced in the Announcement of the competition.

Rule 355
World ranking systems

The relevant ISU Bodies shall determine and publish in an ISU Communication calculation systems to establish world rankings:
a) for Ladies, Men, Pair Skating and Ice Dance;
b) by ISU Members including Team Results and/or individual results.
Those world rankings are updated and published on the ISU website.

Rules 356 – 357 (reserved)

Rule 358
Awards

1. Awards are made for the final result of each competition.

2. The organizing ISU Member may make additional awards for placement in any Segment of the competition.

3. Members of the ISU may not award for other competitions any medals which resemble the ISU Championship medals.

Rules 359 – 364 (reserved)

Rule 365
Exhibitions during Competitions

A Competitor in an International Competition may not give an additional performance until all parts of this competition have been completed and the results of the competition in question announced.

Rule 366
Protocol

1. A protocol must be published after each ISU Championships, Olympic Winter Games, Winter Youth Olympic Games, and International Competition. It must include the general and special items specified below.
2. The general items of a protocol are:
   a) the place of the event and the name of the ice rink;

b) the date and time when the event was held;

c) for ISU Championships only: a list with the ISU Council, Single & Pair Skating and Ice Dance Technical Committee members, ISU Director General, Sports Director(s), Treasurer and Legal Advisors;

d) the attending ISU Office Holders;

e) participating ISU Members and entries;

f) the composition of the Organizing Committee;

g) the event schedule (on ice and off-ice schedule);

h) the Officials (for each Segment if applicable);

i) the type of rink (heated or unheated);

j) the size of the skating area/ice surface;

k) the ice conditions;

l) the number of entries, followed by the number of Competitors who took part;

m) the special conditions of the Segments, the factors and duration;

n) for Ice Dance, the Pattern Dance(s) in the order of skating (if applicable).

o) for Ice Dance, the rhythm(s)/theme of the Short Dance.

3. The special items of a protocol are those listed in Rule 353, paragraph 4 for each discipline (Ladies, Men, Pairs, Ice Dance).

4. A protocol must be signed by the Referee and the Technical Controller.

5. In the protocols of ISU Championships the photographs of those placed first, second and third must be included. For International Competitions the inclusion of such photographs is not mandatory.

6. Protocol for ISU Events and International Competitions must be sent in electronic form to the ISU Secretariat for publication on the ISU website, not later than <u>one week</u> after the completion of the event (for ISU Championships, see Rule 135).

Rule 367
New systems

1. New methods and technical amendments may be tried out in International Competitions (with the exception of ISU Championships) provided the following directions are observed:

   a) An application must be sent at least three (3) months in advance to the respective Technical Committee and the approval of the latter obtained;

   b) In the announcement of the Competition a remark must be made as to

the kind of innovation to be tried out;

c) The Technical Committee will appoint a competent person to oversee the Competition and report on the new method;

d) On conclusion of the Competition the Organizing ISU Member must report on the new method to the Technical Committee.

2. Modifications of a technical nature may be implemented by the Technical Committee on a trial basis in International Competitions. ISU Members shall be notified of such modifications through an ISU Communication or Circular letter.

Rule 368
Comments to the public

No official participating in an International Figure Skating event in any capacity may make any negative comment to the public concerning such event.

Rules 369 – 374 (reserved)

B. ISU Championships – Special Rules

Rule 375
Allotment

For Regulations concerning the allotment and dates of ISU Figure Skating Championships see Rules 127 and 128.

Rule 376
Schedule/duration of Championships

1. ISU Championships must not exceed seven days. Two days of free practice at the site of the Championships for all Competitors must be provided by the organizing ISU Member prior to the first competitive skating of any ISU Championships.
2. For each discipline, Short Program/Short Dance and Free Skating/Free Dance must not be skated on the same day but should be completed within a maximum period of three (3) consecutive days.

Rule 377
Participation in Championships

1. Participation in World Championships is open to all Competitors who belong to an ISU Member (for exceptions see Rule 109, paragraph 5).
2. In the European Championships the only Competitors who are eligible to compete are individuals who are members of a European ISU Member and fulfill the requirements of Rule 109, paragraphs 2 and 3.
3. In the Four Continents Championships the only Competitors who are eligible to compete are individuals who are members of a non-European ISU Member and fulfill the requirements of Rule 109, paragraphs 2 and 3.

Rule 378
Entries ISU Championships Single & Pair Skating & Ice Dance

1. At ISU Championships in Single & Pair Skating and Ice Dance, the entries by name must reach simultaneously the Sports Director(s) and the Organizing Committee twenty-one (21) days before the first day (first official practice day) of the Championships concerned. For post entries, Rule 115, paragraph 6 of the General Regulations applies.

2. a) Number of entries:

In ISU Championships, each ISU Member, except Special Clubs, provided they enter Competitors having achieved the Minimum Total Elements Scores as outlined in paragraph 3 below, may enter at least one Competitor per discipline (Man, Lady, Pair Skating couple, Ice Dance couple);

b) Overall Entry Quotas per ISU Member for each Championships/discipline:

In order to determine such Overall Entry Quotas, ISU Members who have participated in the immediately preceding season in the corresponding discipline (Men, Ladies, Pair Skating, Ice Dance) of the same Championships shall accumulate points equal to the sum of placements of their Competitors who were entered in this preceding season's Championships. Competitors are considered entered if they participate in the initial draw.

Competitors who were entered for the Short Program/Short Dance, but did not qualify for the Free Skating/Free Dance, will be awarded 18 points for Single Skating and the number of points equal to their placement in Short Program/Short Dance for Pair Skating/Ice Dance (however if this placement is lower than 18, only 18 points will be awarded). Competitors who qualified for the Free Skating/Free Dance, but were not placed higher than 16th place in the final result will be awarded 16 points (or the number of points equal to the number of Competitors if the number of Competitors entered is less than 16 in cases of withdrawals not specified in the paragraph below).

However the Competitors who withdrew because of:

- illness or injury, (provided this illness or injury is certified by the ISU Medical Advisor) or
- unexpected damage to the equipment during the warm up or the performance (provided this damage of the equipment is certified by the Referee),

are not considered as entered for the purpose of this Rule if they did not start or finish the Free Skating/Free Dance, but were among the top ten (10) in the Short Program/Short Dance.

If an ISU Member entered three (3) Competitors in a discipline of a Championships, only the two (2) best placed Competitors will count for points;

c) The number of Competitors (Overall Entry Quota) per discipline (Men, Ladies, Pair Skating, Ice Dance) an ISU Member may send to the site of a Championships is determined in accordance with the following diagram:

No. of Competitors in the preceding season's Championships who count for points	Points required for 3 entries in the current season's Championships	Points required for 2 entries in the current season's Championships
Two (2)	Not more than 13	Not more than 28
One (1)	Not more than 2	Not more than 10

d) The ISU Four Continents Figure Skating Championships will have an open Overall Entry Quota with each ISU Member entitled to enter up to a maximum of three (3) entries for each discipline.

3. Minimum Total Elements Scores:

   To be entered into and participate in an ISU Championships a Skater/Pair/Couple must have reached in an ISU recognized International Competition (as per Article 39, paragraph 7 and Rule 107, paragraphs 1 to 9) during the ongoing or immediately preceding season the applicable Minimum Total Elements Scores (points). The applicable Minimum Total Elements Scores shall be decided for each season by the ISU Council based on a joint proposal from the respective Technical Committee and the Sports Director(s) and shall be published in an ISU Communication.

4. Each ISU Member may enter for each discipline one substitute in the case of one entry and no more than two substitutes in the case of two or more entries. The substitutes may compete only if their ISU Members have withdrawn the name of their Competitors initially entered for the concerned discipline at least one hour before the first draw begins.

Rule 379
Music titles

The title of the music of the Short Program/Short Dance and of the Free Skating /Free Dance, and the names of the composers must be submitted with the entries for ISU Championships. If possible this should be printed in the program.

Rule 380 (reserved)

Rule 381
ISU Event Coordinator and Regional Event Coordination Assistants

1. Event Coordinator, Assistant Event Coordinator and Regional Event Coordination Assistants (RECAs) in Figure Skating:
   The ISU Council shall appoint an ISU Event Coordinator for Figure Skating and if necessary and possible an Assistant Event Coordinator as well as a pool of Regional Event Coordination Assistants according to Article 38 of the Constitution.
2. Consultation and inspection visit for ISU Figure Skating Championships and ISU Grand Prix of Figure Skating Final:
   For each Figure Skating Championships the Sport Manager Figure Skating and/or the Event Coordinator and/or Assistant Event Coordinator shall attend at least one consultation and inspection visit at the site of the Championships, including meetings with the television and advertising companies during the two (2) years before the Championships/Final.
3. On site monitoring of ISU Figure Skating Championships:
   For each Figure Skating Championships and the ISU Grand Prix of Figure Skating Final the Sport Manager Figure Skating and/or the Event Coordinator and/or the Assistant Event Coordinator plus one (1) or two (2) Regional Event Coordination Assistants shall be present at the Championships/Final. At least one of them must be present from the beginning of the official training of the Championships/Final and may not serve in another capacity except in an emergency. They shall represent the ISU in all technical matters concerning the condition, adequacy and scheduling for use of all skating facilities and services used in connection with the Championships/Final. In addition, as necessary, they will act as a liaison between the Referee and other Officials and the Organizers.
   The composition of each ISU Event Coordination team (Sport Manager Figure Skating, Event Coordinator, Assistant Event Coordinator, Regional Event Coordination Assistants) shall be proposed by the Vice President through its annual budget and shall be decided by the ISU Council.
4. Monitoring and on-site attendance of other ISU Figure Skating Events:
   For other ISU Figure Skating Events, an ISU Event Coordination team shall monitor and possibly be present on site of the Event as necessary and as proposed by the Vice President within an annual budget and as decided by the ISU Council.

Rules 382 – 392 (reserved)

Rule 393
Presentation of medals Single & Pair Skating and Ice Dance

1. The ceremonies of awarding medals at ISU Championships in Single & Pair Skating and Ice Dance shall be as follows:
   a) When the final results have been calculated, first the champion and then the second and third placed Competitors are announced, and are called to the winners' platform on the ice;
   b) The ISU Representative awards the champion(s) the gold ISU medal(s), and the silver and bronze ISU medals to the second and third. The Referee and Technical Controller and the representative of the organizing ISU Member congratulate the medal winners (see also Rule 134, paragraph 3).
2. The Referee shall present after the completion of each Segment of every event (Short Program and Free Skating for Ladies, Men, Pairs, Short Dance and Free Dance for Ice Dance) a small ISU gold medal to the winner of this Segment and small silver and bronze medals to the second and third in this Segment (see also Rule 134 paragraph 3 f).

Rule 394
Medals

The Organizing ISU Member must order the Championships medals from the ISU Director General.

Rules 395 (reserved)

Rule 396
Advertisements of ice shows

At ISU Championships, no advertisements of ice shows are allowed inside or outside the ice rinks or in the program sold or given to the public. If such advertisements exist, the ISU Event Coordinator and/or the ISU Representative must intervene immediately.

Rules 398 – 399 (reserved)

C. Olympic Winter Games

Rule 400
Entries to the Olympic Winter Games

A. Entries of Competitors

1. The maximum number of entries for the Olympic Winter Games is thirty (30) for Ladies and Men, twenty (20) for Pairs and twenty-four (24) for Ice Dance. In Single Skating the best placed twenty-four (24) Competitors in the Short Program will qualify for the final Free Skating. In Pair Skating the best placed sixteen (16) Pairs in the Short Program will qualify for the final Free Skating. In Ice Dance, the best placed twenty (20) Couples in the Short Dance will qualify for the final Free Dance.
2. ISU Members who have participated in the immediately preceding year's World Senior Championships accumulate points according to Rule 378, paragraph 2.b) and c).
3. Twenty-four (24) entries in the Ladies event and the Men event, sixteen (16) entries in the Pairs event and nineteen (19) entries in the Ice Dance event will be determined according to the classification outlined in paragraph 2 above. For this purpose ISU Members who have earned the right for two (2) or three (3) entries at the immediately preceding year's World Senior Championships earn the same right for the Olympic Winter Games and remaining ISU Members are listed in order of their best placed Skater in the same World Senior Championships. If the application of the above procedure results in more than twenty-four (24) Ladies or Men, sixteen (16) Pairs, or nineteen (19) Ice Dance Couples being eligible for direct entry, the last ISU Members to reach the qualifying limit would not be permitted to enter a Skater/Pair/Couple that would cause the limit to be exceeded.
4. The remaining open entries available will be filled by ISU Members in order of their placements at a Senior International Competition designated by the ISU and conducted in the autumn of the calendar year immediately preceding the Olympic Winter Games. The open entries are available only to those ISU Members who have not previously earned an entry and only one entry per ISU Member may be earned.
5. To be entered into and participate in the Olympic Winter Games a Skater/Pair/Couple must have reached in an ISU recognized International Competition (as per Article 39, paragraph 7 and Rule 107, paragraphs 1 to 9) during the ongoing or immediately preceding season the applicable Minimum Total Elements Score (points) established for the ISU European and Four Continents Championships (see Rule 378, paragraph 3).

6. However in case the Host ISU Member went through the normal qualifying procedure and did not qualify under paragraphs 3 or 4 above in any of the disciplines (Ladies, Men, Pair Skating, Ice Dance), the Host ISU Member shall have the right to enter one (1) Competitor per concerned discipline(s) as additional entry(ies) as long as the concerned Skater(s)/Pair/Couple achieved the Minimum Total Elements Score (points) for the Olympic Winter Games.
7. ISU Members who earned entries under the provisions of the paragraphs 2 and 3 above, should if possible inform the ISU Secretariat not later than September 15th after the respective Senior World Championships if they intend to use their full quota of entries. In case some of the ISU Members do not intend to use their full quotas of entries, the remaining open entries until number of twenty-four (24) entries in Single Skating, sixteen (16) entries in Pair Skating and nineteen (19) entries in Ice Dance will be filled by increasing the number of entries according to paragraph 4 above.
8. In the event that the ISU Members do not exercise their right to announce their participation within the prescribed IOC date limit in accordance with paragraphs 3 to 5, stand-by entries will be chosen based on the final result of the designated Senior International Competition (paragraph 4) for those ISU Members not qualified and not yet represented.
9. A list of the set and stand-by entries will be published in an ISU Communication not later than October 30th after the respective Senior World Championships and Qualifying Competition for the Olympic Games.

B. Entries Team event

If in the program of the Olympic Winter Games a Team event involving Single & Pair Skating and Ice Dance is adopted by the IOC in addition to the existing number of events, the Council in consultation with the IOC shall determine all relevant conditions (number of teams and participants, qualifying/participation/ entry criteria, technical format, starting order, result determination, officials participation and other relevant technical and organizational details).

Rule 401
Appointment of Officials to the Olympic Winter Games

1. The Referees, Technical Controllers, Technical Specialists, Assistant Technical Specialists, Data & Replay Operators and OAC members for the Figure Skating events of the Olympic Winter Games, and any Qualifying Competition for the Olympic Winter Games shall be appointed according to Rules 121 and 126, paragraph 9.

2. The ISU Member for the country in which the Olympic Winter Games are held may recommend to serve not more than two of its own Referees/Technical Controllers/Technical Specialists for Single & Pair Skating plus one Referee/ Technical Controller/Technical Specialist for Ice Dance, including those that are also ISU Office Holders. Such recommendations must be submitted to the respective Sports Directors not later than April 1st in the year preceding the Olympic Winter Games.
3. The selected Referees, Technical Controllers, Technical Specialists, Data & Replay Operators and OAC members must be contacted by the Organizing Committee not less than 90 days before the start of the Games.
4. The names of the Officials appointed in accordance with paragraph 1 of this Rule must be communicated by the ISU to the Organizing Committee of the National Olympic Committee as well as to the ISU Member concerned.

Rule 402
Panels of Judges for the Olympic Winter Games

1. For the Olympic Winter Games Single & Pair Skating and Ice Dance competitions,
   a) The panel of Judges shall consist of nine (9) Judges per Segment.
   For each discipline thirteen (13) Judges shall be drawn from those ISU Members which have Skaters qualified for the Olympic Winter Games according to the results of the World Championships of the preceding year in the discipline concerned (with no further changes).
   b) All drawn Judges will be on site at the Olympic Winter Games location where all consequent draws to complete panel of nine (9) Judges for each Segment of the respective discipline will be conducted by the Referee in the manner mentioned in paragraph f) below.
   c) If the number of ISU Members to draw Judges based on the procedure as per paragraphs a) above is insufficient for any discipline to complete the panel of nine (9) Judges for the first Segment plus the four (4) additional Judges for the second Segment, the additional ISU Members having the right to send Judges to the Olympic Winter Games will be drawn out of a pool of ISU Members having qualified Skaters/Couples in the respective discipline based on the result of the Qualifying Competition for the Olympic Games.

d) If the number of ISU Members to draw Judges based on the procedure as per paragraphs a) and c) above is insufficient for any discipline to complete the panel of nine (9) Judges for the first Segment plus the four (4) additional Judges for the second Segment, the additional ISU Members having the right to send Judges to the Olympic Winter Games will be drawn out of all remaining ISU Members (other than those included in the draw as per paragraphs a) and c) above) having Skaters/Couples in the respective event in the World Championships of the preceding year.

e) An additional draw might be necessary if at the beginning of the European Figure Skating Championships preceding the Olympic Winter Games there is an insufficient number of named Judges for any discipline of the Olympic Winter Games to complete the panel of nine (9) Judges for the first Segment plus the four (4) additional Judges for the second Segment. Such insufficient number of Judges might be the result of the draws as per paragraphs a), c) and d) above and/or due to ISU Members having been drawn for Judges spots as per paragraph a), c) and d) above who were subsequently unable to name the respective Judges or had to withdraw the named Judges before the beginning of the European Figure Skating Championships. The Judges for each discipline to be drawn to complete the panel of nine (9) Judges for the first Segment plus the four (4) additional Judges for the second Segment will be drawn out of a pool of ISU Members, already drawn and having named Judges in any of the other disciplines for the Olympic Winter Games and willing to serve in the discipline in question as their second event, provided such an ISU Member is not yet represented with a Judge in the respective discipline. Such additional draw requiring the identity of the named Judges concerned, will be made if necessary during the European Figure Skating Championships preceding the Olympic Winter Games.

f) On the site of the Olympic Winter Games an open random draw will be conducted by the Referee forty-five (45) minutes prior to the skating of each Segment of the respective event, in the presence of all Judges drawn for this event, to complete the panel of nine (9) Judges. For the first Segment of the event nine (9) Judges will be drawn from all thirteen (13) Judges drawn for the respective event. The seating order will be identical to the order the Judges are drawn. For the second Segment of the event, the four (4) Judges not drawn for the first segment will automatically be assigned to be in the panel of nine (9) Judges for the second Segment and all other Judges serving already in the first Segment will participate in the draw to complete the panel of nine (9) Judges. A separate draw will be held for the seating order of the nine (9) Judges.

g) If a Judge officiating on a panel becomes incapacitated while the skating of a Segment is ongoing, no Alternate Judge will take his place.

h) The basic draw will be conducted after the Qualifying Competition for the Olympic Winter Games on site of the Qualifying Competition; the repechage draw as per paragraph e) above will be held if necessary on site of the European Figure Skating Championships preceding the Olympic Winter Games. The result of these draws will be published by the ISU in a Communication.

i) In case no Skater/Couple of an ISU Member drawn for Judges spots competes in the Olympic Winter Games, a drawn Judge of the respective ISU Member remains on the Judges panel.

j) For the Olympic Winter Games and any ISU Qualifying Competitions for those Games, the panel of Judges shall consist only of Judges on the current lists of ISU Referees or ISU Judges for the respective discipline. The inclusion of an ISU Member in any Judges draw is subject to such ISU Member having a qualified ISU Judge for the respective discipline, who has served at least twice (2x) at ISU Championships/Qualifying Competition for the Olympic Games, before the draw. Only such Judges can be nominated to serve at the Olympic Winter Games.

2. For the naming of the Judges and possible Substitute Judges by the ISU Members having been drawn, ISU General Regulations, Rule 138, paragraph 1. c) apply.

3. The names of the Judges proposed by the ISU Members must be announced not later than ten (10) days after publication of the draw results to:

   a) their own National Olympic Committee;

   b) the ISU Member holding the Olympic Winter Games Figure Skating competitions;

   c) the ISU Director General;

   d) the respective Sports Director(s).

4. The Organizing Committee of the skating Event at the Olympic Winter Games is responsible for providing suitable accommodation for the Referees, Technical Controllers, Technical Specialists, Data Operators, Replay Operators and Judges.

Rule 403
Draws at the Olympic Winter Games

All draws (with exception of the opening draws for the skating order which will be made separately two days before the beginning of the first Segment in each discipline), Short Program, Free Skating respectively Short Dance, Free Dance, multiplying factors and the duration of all programs are as provided for ISU Championships.

Rules 404 – 409 (reserved)

REGULATIONS FOR OFFICIALS IN SINGLE & PAIR SKATING AND ICE DANCE

A. Nomination and appointment of Officials

Rule 410
Process for nomination and appointment of Officials

1. In accordance with Rules 121 and 122, every ISU Member must, annually before April 15th, nominate to the ISU Director General those individuals who are recommended as follows:
   a) for ISU Seminar and ISU Examination to become an International Referee and first appointment;
   b) for ISU Seminar and ISU Examination to become an ISU Referee and first appointment;
   c) for ISU Seminar and ISU Examination to become an International Judge and first appointment;
   d) for ISU Examination to become an ISU Judge and first appointment;
   e) for ISU Seminar and ISU Examination to become an International Technical Controller and first appointment;
   f) for ISU Seminar and ISU Examination to become an ISU Technical Controller and first appointment;
   g) for ISU Seminar and ISU Examination to become an International Technical Specialist and first appointment;
   h) for ISU Seminar and ISU Examination to become an ISU Technical Specialist and first appointment;
   i) for ISU Seminar to become an ISU or International Data & Replay Operator and first appointment;
2. Nominations must be submitted, and appointments by the ISU must be made, separately for the different qualifications and the different disciplines as follows:
   a) Referees and Judges
      - Single & Pair Skating
      - Ice Dance
   b) Technical Controllers and Technical Specialists
      - Single Skating
      - Pair Skating
      - Ice Dance
   c) Data & Replays Operators
      - all disciplines
3. Each nomination of an Official by an ISU Member must be accompanied by the completed official form for the respective discipline and qualification of Official.

4. The ISU Member must verify in accordance with Rules 411 to 417 the qualifications of the individual recommended for the qualification of Official applied for.
5. In the case of national activities required for ISU Examination, first appointment or re-appointment, the ISU Member must submit, together with its nominations, the respective documents confirming these activities such as a list of panel of the event or a statement of the ISU Member or the Referee.
6. Officials can be nominated in the following way:
   a) for first appointment: by an ISU Member (Technical Specialists also by Technical Committee/Sports Director(s));
   b) for annual re-appointment as an International Official: by the respective Technical Committee unless otherwise informed by the ISU Member as per Rule 122;
   c) for annual re-appointment as an ISU Official: by the respective Technical Committee unless otherwise informed by the ISU Member as per Rule 122.
7. In principle, Officials nominated to be entered on the list of an ISU Member shall have the citizenship of the country of that ISU Member.
8. If an Official nominated to be entered on the list of an ISU Member does not have the citizenship of the country of that ISU Member, the Official must have had a permanent residence in the country of that ISU Member for at least twelve (12) months preceding the nomination. In addition, the ISU Member in the country of which the Official is a citizen must give its approval.
9. a) An Official who has already been on the list of any ISU Member, can be nominated to be entered on the list of another ISU Member only under the following conditions:
      i) the Official has acquired the citizenship of the country of the ISU Member on whose list he is to be entered and has also taken up permanent residence in that country; or
      ii) the Official has had dual citizenship and has taken up permanent residence in the country of the ISU Member on whose list he is to be entered and of which he is also a citizen;
      iii) the ISU Member on whose list the Official was entered before gives its approval.

b) If an Official who has already been on the list of any ISU Member;
   i) acquires a new citizenship without changing the country of his permanent residence; or
   ii) has had a dual citizenship and agrees to be entered on the list of the ISU Member in the country of his second citizenship, but does not change the country of his permanent residence; or
   iii) is not given the approval of the ISU Member on whose list the Official was entered before,

   he can be nominated to be entered on the list of another ISU Member only after expiration of twelve (12) months following April 15th of the year during which he was entered on the list of the original ISU Member.

10. Exceptions to paragraphs 7 to 9 of this Rule may be granted by the Vice-President Figure Skating if insisting on satisfying all stated requirements would result in a serious hardship to the Official concerned due to special circumstances of his case.

11. For interpretation of terms "citizenship" and "residence" as well as documents by which citizenship and residence can be proved, reference is made to relevant ISU Communications.

12. Candidates having passed successfully all parts of an ISU Examination to become an Official will immediately be appointed and be added to the current and respective list of Officials of the ISU Member concerned.

13. According to Article 20, paragraph 3.c) (i) and (ii), the appointment as Officials from among nominated persons requires the initial approval of the respective Technical Committee which prepares a list of the individuals it recommends for appointment and submits that list to the ISU Vice-President Figure Skating. If a nominated person is not included on the Technical Committee's approved list, an appeal may be made by the nominating ISU Member to the ISU Vice-President Figure Skating whose decision shall be final. Only Officials finally approved by the respective Technical Committee and the ISU Vice-President Figure Skating will be recognized as such. When a nominated person is not approved by the ISU, the reason for such non-approval will be communicated to the nominating ISU Member.

14. The ISU Vice-President Figure Skating may, following consultation with the respective Technical Committee, appoint without prior nomination a maximum of

    - three (3) names to the lists of Referees, Technical Controllers, Technical Specialists, Data & Replay Operators,
    - six (6) names to the list of Judges.

    Persons so appointed by the ISU Vice-President Figure Skating must satisfy all qualification requirements.

15. As ISU Officials are entitled to serve as International Officials in the same function (see Rule 430, General, b), their names are not included in the list of International Officials.
16. As ISU Referees are entitled to serve as ISU Judges or International Judges (see Rule 430, General, c), their names are not included in the list of ISU Judges and International Judges.
17. As International Referees are entitled to serve as International Judges (see Rule 430, General, d)), their names are not included in the list of International Judges.
18. The full list of Officials who have been approved by the respective Technical Committee and the ISU Vice-President Figure Skating must be communicated to the ISU Members in accordance with Rule 122. The appointments shall be effective August 1st of each year through July 31st of the following year.
19. ISU Members must check the list of Officials as soon as they receive it. Any request for correction must be made within two (2) months. After that period the list is deemed to be correct. Objections to any such list must be lodged by ISU Members within two (2) months, with the ISU Vice-President Figure Skating, whose decision, after consideration of any such objection, shall be final.

Rule 411
General requirements for nomination and appointment of Officials

1. Each ISU Member shall guarantee that the Referees, Technical Controllers and Judges nominated by it are eligible persons in accordance with Rule 102. In cases of violation of the foregoing, the ISU Member concerned shall lose the right to nominate Officials for the immediately succeeding year and the Referee, Technical Controller or Judge in question shall be removed from the lists.
2. ISU Members must exercise the utmost care to nominate as Officials only competent, reliable, trained, tested and impartial individuals who possess a thorough knowledge of the ISU Rules appropriate to their qualification. Individuals nominated as Officials must have a working knowledge of English appropriate to the duties attached to their qualification.
3. Service and seminar attendance taken into consideration for the specific requirements for nomination and appointment of Officials (see Rules 412 to 417), are only those in the respective discipline, unless specifically mentioned.

4. For any first appointment, the international service (when applicable) and national service (when applicable) of the concerned Official in the requested qualification(s) must have been considered satisfactory:

   - for international service: by the respective Technical Committee,
   - for national service: by the respective ISU Member (when the Official is nominated by a ISU Member),

   for the period of time preceding the nomination during which the service requirements must be met.

5. For re-appointment of Referees and Judges, Officials who have not been able to meet the service requirement because, although nominated to serve, have not been drawn, shall not be disqualified from re-appointment.

6. a) Any ISU Official, not fulfilling the service and/or seminar attendance requirements at July 31st for re-appointment to the respective qualification shall be transferred to the list of International Officials of the respective qualification. To be eligible for reinstatement to the position formerly held, the concerned Official then must fulfill the lacking requirement(s) prior to the following July 31st. If these requirements are not fulfilled, the concerned Official remains on the list of International Officials, provided the requirements for this qualification be fulfilled.

   b) Any International Official, not fulfilling the service and/or seminar attendance requirements at July 31st for re-appointment to the respective qualification shall be deleted from the list of International Officials of the respective qualification. To be eligible for reinstatement to the position formerly held, the concerned Official then must fulfill the lacking requirement(s) prior to the following July 31st. If these requirements are not fulfilled (or cannot be fulfilled), the concerned Official must again fulfill the requirements for first appointment as an International Official and be nominated accordingly.

   c) However in case the seminar attendance requirement is not fulfilled because of medically verified life threatening illness the actions stipulated in paragraphs a) and b) above shall not be taken for one year and one time only.

7. Reinstatement of Officials after suspension for misconduct

   a) The suspension for misconduct of an Official by the Disciplinary Commission shall apply to all the ISU/International qualifications and disciplines for which the Official was qualified.

   b) An Official suspended for misconduct by the Disciplinary Commission for a specified period of time shall be eligible for reinstatement at the end of that time, as follows, unless a request to the contrary is received from the ISU Member of the Official:

      (i) an Official suspended for misconduct for up to thirty-six (36)

months shall be reinstated in the position formerly held if he fulfills the age, service and seminar attendance requirements for re-appointment to this qualification as of July 31st preceding the reinstatement. Service in National Competitions during the period of suspension shall not be taken into consideration. If these requirements were not fulfilled (or could not be fulfilled), provisions of paragraph 6 above shall apply;

(ii) to be reinstated, an Official suspended for misconduct for more than thirty-six (36) months must fulfill the requirements for first appointment as an International Official and be nominated accordingly.

8. ISU Examinations:

a) The criteria to pass successfully the ISU Examinations to become an Official are published in ISU Communications.

b) Each ISU Examination to become an Official cannot be taken more than three (3) times by a candidate. In case of two (2) failures, there must be an interval of at least twenty-four (24) months between the second and the third final attempt.

9. Definitions: for the purpose of Rules 412 to 416,

a) National Competition: means Senior or Junior national, sectional or divisional championships or competition.

b) International Competition: means ISU Event, Olympic Winter Games or other International Senior or Junior Competition conducted in accordance with Rule 107, paragraphs 8 or 9, with, for the Segments considered for service requirements, three (3) or more ISU Members participating and:

- for Single Skating: six (6) or more entries,
- for Pair Skating and Ice Dance: four (4) or more entries.

Open International Competitions (as per Rule 107, paragraph 13) are not considered for service requirements.

c) Trial Judging as a judging service: means judging the Segment of an ISU Championships, for which an ISU Judge is not drawn, conducted by a moderator who submits a report to the respective Technical Committee.

d) The number of National or International Competitions considered for service requirements is the number of different Competitions. Different categories/disciplines of a Competition are not considered as different Competitions.

Rule 412
Specific requirements for nomination and appointment of Referees

1. To be eligible for first appointment as an International Referee, the Official must fulfill the following requirements:
   a) Age: have not reached the age of seventy (70) in the calendar year of the nomination.
   b) Background:
      i) have been included as International Judge in the three (3) consecutive annual ISU Communications listing such Officials positions immediately preceding the nomination.
      ii) have the highest knowledge of the discipline concerned;
      iii) possess good communication skills;
      iv) be able to take directions and work within a team environment.
   c) Service: have served, during the thirty-six (36) months preceding July 31st of the calendar year of the nomination:
      i) as a Referee, in two (2) National Competitions (as per Rule 411, paragraph 9.a);
      ii) as a Judge (or as a Technical Controller for Technical Committee ISU Members only) :
         - in three (3) International Competitions (as per Rule 411, paragraph 9.b). The Segments judged must include:
            - three times (3x) Short Program, respectively Short Dance
            - three times (3x) Free Skating, respectively Free Dance
   d) Seminar attendance:
      i) have completed, during the forty-eight (48) months preceding July 31st of the calendar year of the nomination, an ISU Seminar for first appointment or re-appointment of Judges (see Rule 417),
      ii) completes an ISU Seminar for first appointment of International Referees (see Rule 417).
   e) Examination: passes successfully the ISU Examination to become an International Referee.
2. To be eligible for annual re-appointment as an International Referee, the Official must fulfill the following requirements:
   a) Age: have not reached the age of seventy (70) in the calendar year of the nomination.
   b) Service: have served, during the thirty-six (36) months preceding July 31st of the calendar year of the nomination, as a Referee, Judge, Trial Judge, Technical Controller or OAC Member on site in one (1) International Competition (as per Rule 411, paragraph 9.b).

c) Seminar attendance: have completed, during the forty-eight (48) months preceding July 31st of the calendar year of the nomination, an ISU Seminar for first appointment or re-appointment of Judges and an ISU Seminar for first appointment or re-appointment of International Referees (see Rule 417).

d) Consequences of not meeting the service and/or seminar attendance requirements are listed in Rule 411, paragraph 6.

3. To be eligible for first appointment as an ISU Referee, the Official must fulfill the following requirements:

a) Age: have not reached the age of seventy (70) in the calendar year of the nomination.

b) Background:
   i) have been included both as ISU Judge and International Referee in the three (3) consecutive annual ISU Communications listing such Officials positions immediately preceding the nomination;
   ii) have the highest knowledge of the discipline concerned;
   iii) possess good communication skills;
   iv) be able to take directions and work within a team environment.

c) Service: have served, during the forty-eight (48) months preceding July 31st of the calendar year of the nomination preceding the nomination:
   i) as a Referee, in two (2) International Competitions (as per Rule 411, paragraph 9.b). The Segments refereed must include:
      - twice (2x) Short Program/Short Dance
      - twice (2x) Free Skating/Free Dance.
   ii) as a Judge (or as a Technical Controller for Technical Committee Members only), in four (4) Segments in at least two (2) of the following Competitions: the ISU Grand Prix of Figure Skating Final (combined Junior and Senior), ISU Championships or the Olympic Winter Games, at least one of which being an ISU Championships or the Olympic Winter Games. The Segments judged must include:
      - once (1x) Short Program/Short Dance
      - once (1x) Free Skating/Free Dance.

d) Seminar attendance:
   i) have completed, during the forty-eight (48) months preceding July 31st of the calendar year of the nomination, an ISU Seminar for first appointment or re-appointment of Judges (see Rule 417),
   ii) completes an ISU Seminar for first appointment of ISU Referees (see Rule 417).

e) Examination: passes successfully the ISU Examination to become an ISU Referee.

4. To be eligible for annual re-appointment as an ISU Referee, the Official must fulfill the following requirements:

   a) Age: have not reached the age of seventy (70) in the calendar year of the nomination.
   b) Service: have served, during the thirty-six (36) months preceding July 31st of the calendar year of the nomination, as a Referee, Judge, Trial Judge, Technical Controller or OAC Member on site in one (1) International Competition (as per Rule 411, paragraph 9.b);
   c) Seminar attendance: have completed, during the forty-eight (48) months preceding July 31st of the calendar year of the nomination, an ISU Seminar for first appointment or re-appointment of Judges and an ISU Seminar for first appointment or re-appointment of ISU Referees (see Rule 417).
   d) Consequences of not meeting the service and/or seminar attendance requirements are listed in Rule 411, paragraph 6.

Rule 413
Specific requirements for nomination and appointment of Judges

1. To be eligible for first appointment as an International Judge, the Official must fulfill the following requirements:

   a) Age: have reached the age of twenty-four (24) but not the age of fifty (50) in the calendar year of the nomination. <u>If a Judge is already on the ISU List of International or ISU Judges /Referees for another ISU Figure Skating Discipline, the age limit of 50 does not apply</u>.
   b) Service: have served, during the thirty-six (36) months preceding July 31st of the calendar year of the nomination as a Judge:
      - for Single & Pair Skating: in three (3) National Competitions (as per Rule 411, paragraph 9.a), including one (1) Single Skating event. The Segments judged must include:
        - three (3x) Short Program
        - three (3x) Free Program.
      - for Ice Dance: in two (2) National Competitions. The Segments judged must include:
        - twice (2x) Short Dance
        - twice (2x) Free Dance.
   c) Seminar attendance: completes an ISU Seminar for first appointment of International Judges (see Rule 417).
   d) Examination: passes successfully the written part and practical part of the ISU Examination to become an International Judge. Any failed part of the ISU Examination must be retaken by the candidate concerned at

the next year's examination, otherwise the nomination must be resubmitted.

2. To be eligible for annual re-appointment as an International Judge, the Official must fulfill the following requirements:
   a) Age: have not reached the age of seventy (70) in the calendar year of the nomination.
   b) Service: have served, during the thirty-six (36) months preceding July 31st of the calendar year of the nomination, as a Referee, Judge, or Technical Controller in one (1) International Competition (as per Rule 411, paragraph 9.b).
   c) Seminar attendance: have completed, during the forty-eight (48) months preceding July 31st of the calendar year of the nomination, an ISU Seminar for first appointment or re-appointment of International Judges (see Rule 417).
   d) Consequences of not meeting the service and/or seminar attendance requirements are listed in Rule 411, paragraph 6.
3. To be eligible, for first appointment as an ISU Judge, the Official must fulfill the following requirements:
   a) Age: have not reached the age of seventy (70) in the calendar year of the nomination.
   b) Background: have been included as International Judge in the three (3) consecutive annual ISU Communications listing such Officials positions immediately preceding the nomination.
   c) Service: have served, during the thirty-six (36) months preceding July 31st of the calendar year of the nomination, as a Judge:
      - for Single & Pair Skating: in four (4) International Competitions (as per Rule 411, paragraph 9.b) including one (1) Senior and one (1) Junior. The Segments judged must include:
        - three times (3x) Short Program, including one (1x) at an ISU Event
        - three times (3x) Free Skating, including one (1x) at an ISU Event
        - once (1x) Single Skating Short Program
        - once (1x) Single Skating Free Skating
        - once (1x) Pair Skating Short Program
        - once (1x) Pair Skating Free Skating.

        If the judging service in Pair Skating is not sufficient, the Official must have participated in an ISU Seminar for Judges dedicated to Pair Skating during the 36 months preceding July 31st of the calendar year of the nomination.

- for Ice Dance: in three (3) International Competitions (as per Rule 411, paragraph 9.b) including one (1) Senior and one (1) Junior. The Segments judged must include:
  - twice (2x) Short Dance, including one (1x) at an ISU Event
  - twice (2x) Free Dance, including one (1x) at an ISU Event.

d) Seminar attendance: have completed, during the forty-eight (48) months preceding July 31st of the calendar year of the nomination, an ISU Seminar for first appointment of ISU Judges (see Rule 417).

e) Examination: passes successfully the written part and practical part of the ISU Examination to become an ISU Judge. Any failed part of the ISU Examination must be retaken by the candidate concerned at the next year examination, otherwise the nomination must be resubmitted.

4. To be eligible for annual re-appointment as an ISU Judge, the Official must fulfill the following requirements:

a) Age: have not reached the age of seventy (70) in the calendar year of the nomination.

b) Service: have served, during the thirty-six (36) months preceding July 31st of the calendar year of the nomination, as a Referee, Judge, Trial Judge, Technical Controller or OAC Member on site in one (1) International Competition (as per Rule 411, paragraph 9.b).

c) Seminar attendance: have completed, during the forty-eight (48) months preceding July 31st of the calendar year of the nomination, an ISU Seminar for first appointment or re-appointment of ISU Judges (see Rule 417).

e) Consequences of not meeting the service and/or seminar attendance requirements are listed in Rule 411, paragraph 6.

Rule 414
Specific requirements for nomination and appointment of Technical Controllers

1. To be eligible for first appointment as an International Technical Controller, the Official must fulfill the following requirements:

a) Age: have not reached the age of seventy (70) in the calendar year of the nomination.

b) Background:

i) have been included at least as International Judge in the two (2) consecutive annual ISU Communications listing such Officials positions immediately preceding the nomination;

ii) have the highest knowledge of the discipline concerned with regards to the technical aspects;

iii) possess good communication skills;

iv) be able to take directions and work within a team environment.

c) Service: have served, during the twenty-four (24) months preceding July 31st of the calendar year of the nomination, as a Technical Controller in two (2) National Competitions (as per Rule 411, paragraph 9.a).
d) Seminar attendance: completes an ISU Seminar for first appointment of International Technical Controllers (see Rule 417).
e) Examination: passes successfully the ISU Examination to become an International Technical Controller.

2. To be eligible for annual re-appointment as an International Technical Controller, the Official must fulfill the following requirements:

   a) Age: have not reached the age of seventy (70) in the calendar year of the nomination.
   b) Service: have served, during the twenty-four (24) months preceding July 31st of the calendar year of the nomination, as a Technical Controller in two (2) International Competitions (as per Rule 411, paragraph 9.b) or National Competitions (as per Rule 411, paragraph 9.a). Serving in Pair Skating counts for Single Skating. Serving in Single Skating does not count for Pair Skating.
   c) Seminar attendance: have completed, during the thirty-six (36) months, months preceding July 31st of the calendar year of the nomination, an ISU Seminar for first appointment or re-appointment of International Technical Controllers (see Rule 417). Seminar attendance in Pair Skating counts also for Single Skating. Seminar attendance in Single Skating does not count for Pair Skating.
   d) Consequences of not meeting the service and/or seminar attendance requirements are listed in Rule 411, paragraph 6.

3. To be eligible for first appointment as an ISU Technical Controller, the Official must fulfill the following requirements:

   a) Age: have not reached the age of seventy (70) in the calendar year of the nomination.
   b) Background:
      i) have been included as ISU Referee or ISU Judge in the two (2) consecutive annual ISU Communications listing such Officials positions immediately preceding the nomination;
      ii) have been included as International Technical Controller in the two (2) consecutive annual ISU Communications listing such Officials positions immediately preceding the nomination;
      iii) have the highest knowledge of the discipline concerned with regards to the technical aspects;
      iv) possess good communication skills;
      v) be able to take directions and work within a team environment.
   c) Service: have served, during the twenty-four 24 months preceding July 31st of the calendar year of the nomination, as a Technical Controller in

two (2) International Competitions (as per Rule 411, paragraph 9.b) or National Competitions (as per Rule 411, paragraph 9.a).

d) Seminar attendance: completes an ISU Seminar for first appointment of ISU Technical Controllers (see Rule 417).

e) Examination: passes successfully the ISU Examination to become an ISU Technical Controller.

4. To be eligible for annual re-appointment as an ISU Technical Controller, the Official must fulfill the following requirements:

   a) Age: have not reached the age of seventy (70) in the calendar year of the nomination.

   b) Service: have served, during the twenty-four (24) months in Single Skating and Ice Dance, respectively thirty-six (36) months in Pair Skating, preceding July 31st of the calendar year of the nomination, as a Technical Controller in:

      - two (2) International Competitions (as per Rule 411, paragraph 9.b), or
      - one (1) ISU Event and one (1) National Competition (as per Rule 411, paragraph 9.a).

      Serving in Pair Skating counts for Single Skating as well. Serving in Single Skating counts for Pair Skating if added with a service in Pair Skating as Referee, Judge, Trial Judge, OAC Member on site, or participant or moderator in an ISU Seminar dedicated to Pair Skating.

   c) Seminar attendance: have completed, during the thirty-six (36) months preceding July 31st of the calendar year of the nomination, an ISU Seminar for first appointment or re-appointment of ISU Technical Controllers (see Rule 417). Seminar attendance in Pair Skating counts also for Single Skating. Seminar attendance in Single Skating does not count for Pair Skating.

   d) Consequences of not meeting the service and/or seminar attendance requirements are listed in Rule 411, paragraph 6.

Rule 415
Specific requirements for nomination and appointment of Technical Specialists

1. To be eligible for first appointment as an International Technical Specialist, the Official must fulfill the following requirements:

   a) Age: have reached the age of twenty-four (24) but not the age of seventy (70) in the calendar year of the nomination.

   b) Background:

      i) be recruited from the group of Coaches, former competitive Skaters, or ISU/International Judges or Referees;

ii) be involved on at least a weekly basis for the discipline concerned on site;
iii) have been a former high level Skater (as a minimum at national level);
iv) have the highest knowledge of the discipline concerned with regards to the technical aspects;
v) possess good communication skills;
vi) be able to take directions and work within a team environment.

c) Service: have served, during the twenty-four (24) months preceding July 31st of the calendar year of the nomination, as a Technical Specialist in two (2) National Competitions (as per Rule 411, paragraph 9.a).
d) Seminar attendance: completes an ISU Seminar for first appointment of International Technical Specialists (see Rule 417).
e) Examination: passes successfully the ISU Examination to become an International Technical Specialist.
f) A minimum of two (2) season waiting period must be given between the end of the competitive skating career and the first nomination as a Technical Specialist.

2. To be eligible for annual re-appointment as an International Technical Specialist, the Official must fulfill the following requirements:

a) Age: have not reached the age of seventy (70) in the calendar year of the nomination.
b) Service: have served, during the twenty-four (24) months preceding July 31st of the calendar year of the nomination, as a Technical Specialist in two (2) International Competitions (as per Rule 411, paragraph 9.b) or National Competitions (as per Rule 411, paragraph 9.a). Serving in Pair Skating counts for Single Skating. Serving in Single Skating does not count for Pair Skating.
c) Seminar attendance: have completed, during the thirty-six (36) months preceding July 31st of the calendar year of the nomination, an ISU Seminar for first appointment or re-appointment of International Technical Specialists (see Rule 417). Seminar attendance in Pair Skating counts also for Single Skating. Seminar attendance in Single Skating does not count for Pair Skating.
d) Consequences of not meeting the service and/or seminar attendance requirements are listed in Rule 411, paragraph 6.

3. To be eligible for first appointment as an ISU Technical Specialist, the Official must fulfill the following requirements:

a) Age: have not reached the age of seventy (70) in the calendar year of the nomination.
b) Background:

i) have been included as International Technical Specialist in the two (2) consecutive annual ISU Communications listing such Officials positions immediately preceding the nomination;
ii) be recruited from the group of Coaches, former competitive Skaters, or ISU/International Judges or Referees;
iii) be involved on at least a weekly basis for the discipline concerned on site;
iv) have been a former high level Skater (as a minimum at national level);
v) have the highest knowledge of the discipline concerned with regards to the technical aspects;
vi) possess good communication skills;
vii) be able to take directions and work within a team environment.

c) Service: have served, during the twenty-four (24) months preceding July 31st of the calendar year of the nomination, as a Technical Specialist in two (2) National Competitions (as per Rule 411, paragraph 9.a) or International Competitions (as per Rule 411, paragraph 9.b).
d) Seminar attendance: completes an ISU Seminar for first appointment of ISU Technical Specialists (see Rule 417).
e) Examination: passes successfully the ISU Examination to become an ISU Technical Specialist.

4. To be eligible for annual re-appointment as an ISU Technical Specialist, the Official must fulfill the following requirements:

a) Age: have not reached the age of <u>seventy (70)</u> in the calendar year of the nomination.
b) Service: have served, during the twenty-four (24) months preceding July 31st of the calendar year of the nomination preceding the nomination], as Technical Specialist in:
   - two (2) International Competitions (as per Rule 411, paragraph 9.b), or
   - one (1) ISU Event and one (1) National Competition (as per Rule 411, paragraph 9.a).

   Serving in Pair Skating counts for Single Skating. Serving in Single Skating does not count for Pair Skating.
c) Seminar attendance: have completed, during the thirty-six (36) months preceding July 31st of the calendar year of the nomination, an ISU Seminar for first appointment or re-appointment of ISU Technical Specialists (see Rule 417). Seminar attendance in Pair Skating counts also for Single Skating. Seminar attendance in Single Skating does not count for Pair Skating.
d) Consequences of not meeting the service and/or seminar attendance requirements are listed in Rule 411, paragraph 6.

Rule 416
Specific requirements for nomination and appointment of Data & Replay Operators

1. To be eligible for first appointment as an International Data & Replay Operator, the Official must fulfill the following requirements:
   a) Age: have not reached the age of seventy (70) in the calendar year of the nomination.
   b) Background:
      i) be recruited from the group of Coaches, former competitive Skaters, ISU/International Judges or Referees, or persons involved in Figure Skating in any capacity with a good knowledge of data operations and video system;
      ii) have a good knowledge of the discipline concerned with regards to the technical aspects;
      iii) possess good communication skills;
      iv) be able to take directions and work within a team environment.
   c) Service: have served, in the twenty-four (24) months preceding July 31st of the calendar year of the nomination, on data operations and video systems on national level.
   d) Seminar attendance: complete an ISU Seminar for Data & Replay Operators (see Rule 417) and be recommended by the ISU Vice-President Figure Skating for this "International" qualification.
2. To be eligible for annual re-appointment as an International Data & Replay Operator, the Official must fulfill the following requirements:
   a) Age: have not reached the age of seventy (70) in the calendar year of the nomination.
   b) Service: have served, during the twenty-four (24) months preceding July 31st of the calendar year of the nomination, as Data & Replay Operator in both capacities in two (2) International Competitions (as per Rule 411, paragraph 9.b) or National Competitions (as per Rule 411, paragraph 9.a) Serving in any discipline counts. Serving as a moderator in an ISU Seminar for Data & Replay Operators counts as service in both capacities.
   c) Consequences of not meeting the service and/or seminar attendance requirements are listed in Rule 411, paragraph 6.
3. To be eligible for first appointment as an ISU Data & Replay Operator, the Official must fulfill the following requirements:
   a) Age: have not reached the age of seventy (70) in the calendar year of the nomination.
   b) Background:

i) be recruited from the group of Coaches, former competitive Skaters, ISU/International Judges or Referees or persons involved in Figure Skating in any capacity with a good knowledge of data operations and video system;
ii) have a good knowledge of the discipline concerned with regards to the technical aspects;
iii) possess good communication skills;
iv) be able to take directions and work within a team environment.

c) Service: have served, in the twenty-four (24) months preceding July 31st of the calendar year of the nomination, on data operations and video systems on national level.
d) Seminar attendance: complete an ISU Seminar for Data & Replay Operators (see Rule 417) and be recommended by the ISU Vice-President Figure Skating for this "ISU" qualification.

4. To be eligible for annual re-appointment as an ISU Data & Replay Operator, the Official must fulfill the following requirements:

a) Age: have not reached the age of seventy (70) in the calendar year of the nomination.
b) Service: have served, during the twenty-four (24) months preceding July 31st of the calendar year of the nomination, as Data & Replay Operator in both capacities in:
- two (2) International Competitions (as per Rule 411, paragraph 9.b), or
- one (1) ISU Event and one (1) National Competition (as per Rule 411, paragraph 9.a).

Serving in any discipline counts. Serving as a moderator in an ISU Seminar for Data & Replay Operators counts as service in both capacities.

c) Consequences of not meeting the service and/or seminar attendance requirements are listed in Rule 411, paragraph 6.

Rule 417
ISU Seminars for Officials

1. ISU Members are required to apply for and to organize ISU Seminars covering the purposes of first appointment of ISU Judges, re-appointment of International and ISU Judges and re-appointment of International and ISU Referees, either alone or in conjunction with another (other) ISU Member(s), when necessary. The application for organizing such ISU Seminars must be made by the organizing ISU Member to the ISU Director General with a copy to the Chair of the respective Technical Committee not later than January 1st.

2. The dates and locations of ISU Seminars for Officials, as well as their purposes regarding seminar attendance requirements, are announced in ISU Communications.

3. Applications to complete ISU Seminars for Officials can be made:
   a) for ISU Seminars for first appointment: by their ISU Members (Technical Specialists also by respective Technical Committee or Sports Director(s)),
   b) for ISU Seminars for re-appointment:
      i) of International Officials: by their ISU Members,
      ii) of ISU Officials: by their ISU Members or by the Officials themselves.

4. The nomination of Officials for participation in an ISU Seminar for Technical Controllers or Technical Specialists and/or the ISU Examination to become a Technical Controller or a Technical Specialist requires the initial confirmation of the respective Technical Committee and needs to be presented to the ISU Vice President Figure Skating for final confirmation.

5. To consider the activity as Referee of an ISU Championship or the Olympic Winter Games, as an ISU Seminar for re-appointment, the following is required:

   - the Initial Judges Meeting conducted together with the Chair or a member of the respective Technical Committee;

   - the activity as a Referee for these Championships is considered acceptable by the respective Technical Committee;

6. The Initial Judges Meeting (if conducted by the Chair or a member of the respective Technical Committee) and the Round Table Discussion of an ISU Championships or the Olympic Winter Games form together an ISU Seminar for re-appointment of Judges.

7. Serving in the ISU Grand Prix of Figure Skating Final (combined Junior and Senior), an ISU Championships or the Olympic Winter Games in a discipline as a Technical Controller (respectively as a Technical Specialist) with a mini-seminar:
   - conducted during the Initial Technical Panel Meeting by the Chair or a member of the respective Technical Committee and a Sports Director,
   - concluded by a report prepared by the officiating Technical Controllers in consultation with the Sports Directors on site and attached to their reports (see Rule 433, paragraph 2),

   forms an ISU Seminar for re-appointment of Technical Controllers (respectively of Technical Specialists) in the discipline served.

8. Serving as a moderator in an ISU Seminar for Officials in the respective qualification of Referee, Judge, Technical Controller or Technical Specialist meets the seminar attendance requirements for re-appointment in that qualification.

Rule 418 – 419 (reserved)

B. Appointment of Officials to competitions

Rule 420
Appointment of Officials to International Competitions (general)

1. As per Rule 121, paragraph 2, the ISU Member holding an International Competition is entitled to appoint the Officials, with exceptions for:
   - ISU Championships: see Rules 421, 521
   - other ISU Events: see Article 16, paragraph 2.f) of the Constitution,
   - Olympic Winter Games and Qualifying Competition for the Olympic Games: see Rules 401 and 402,
2. Appointments of Officials by the ISU President are made in accordance with Article 16, paragraph 2.f) of the Constitution.
3. The following Officials are recommended:
   a) Referee;
   b) a panel of a minimum of five (5), if possible, and a maximum of nine (9) Judges;
   c) a Technical Controller;
   d) a Technical Specialist;
   e) an Assistant Technical Specialist;
   f) a Data Operator;
   g) a Replay Operator.
4. The names of the Referees, the Technical Controllers, the Technical Specialists, Data and Replay Operators actually serving at International Competitions as well as the names of those Judges nominated but not drawn must be announced to the ISU Secretariat within two weeks after the conclusion of the competition, by the Organizing ISU Member.
5. a) For all ISU Events, Qualifying Competition for the Olympic Games and the Olympic Winter Games, the Referee, Technical Controller and the Technical Specialists must not be from the same ISU Member and all must be designated ISU.
   b) For all other International Competitions, if possible, the Technical Controller and the Technical Specialists must not be from the same ISU Member and all must be designated ISU. As an exception in extenuating circumstances, one (1) national Technical Specialist or one (1) national Data or Replay Operator from the host ISU Member may be used as Assistant Technical Specialist or Data or Replay Operator. In this case, this Assistant Technical Specialist or Data or Replay Operator must be designated as his ISU Member.

c). For the results from any International Competition to count towards ISU Championship qualification, or for world standings or world rankings, the following conditions must be met:
   i) the Technical Controller and the Technical Specialists must not be from the same ISU Member, and
   ii) a panel of a minimum of five judges is required, and, no ISU Member can have the majority of the Judges on any panel.

See also Rule 121 of the General Regulations.

6. ISU Members organizing International Competitions must do their utmost, in composing the panels of Judges, to secure representation on the panels of Judges from as many participating ISU Members as possible. However, no ISU Member can have the majority of the Judges on any panel. As an exception in extenuating circumstances, if the number of the Judges present is insufficient to compose the panel, one (1) national Judge from the Host ISU Member may be used provided that Judge has been trained in the use of the ISU Judging System.

7. In composing the panel of Judges for the Ice Dance event of International Competitions which also contain Single & Pair Skating events, Judges who are only entitled to serve in Ice Dance must be given first consideration.

8. a) For ISU Senior and Junior Grand Prix of Figure Skating Final and for the Qualifying Competition for the Olympic Winter Games, the Judges draw will be made on site.
   b) When composing the panel for the Qualifying Competition for the Olympic Games, priority should be given, if possible, to the ISU Members entering a Skater/Couple in the event.

Rule 421
Appointments of Officials to ISU Championships (special Rule)

1. The Referees, Technical Controllers, Technical Specialists, Assistant Technical Specialists, Data & Replay Operators, and OAC members shall be appointed according to Rules 121 and 129, paragraph 4 of the General Regulations.

2. The Organizing ISU Member may recommend to serve not more than two of its own Referees/Technical Controllers/Technical Specialists for Single & Pair Skating and one of its Referees/Technical Controllers/Technical Specialists for Ice Dance, including those who are also ISU Office Holders. Such recommendations must be submitted to the respective Sports Director(s) not later than May 1st.

3. The selected Referees, Technical Controllers, Technical Specialists, Data & Replay Operators and OAC members, must be contacted by the Organizing ISU Member not less than 60 days before the start of the Championships.

4. A member of the Organizing Committee of an ISU Championship may not serve as a Referee, Technical Controller, Technical Specialist, Data & Replay Operator, OAC member or Judge at the Championship concerned.
5. For the composition of the panel of Judges, Rule 521 applies.

Rule 422
Appointment of Officials to the Olympic Winter Games (special Rule)

Rules 401 and 402 apply.

Rule 423-429 (reserved)

C. Duties and powers of Officials

Rule 430
General and specific duties and powers

General

a) The category of Officials (“ISU” or “International”) able to officiate at the different ISU sanctioned events and related restrictions are described in Rule 121 of the General Regulations.

b) ISU Officials in the respective discipline(s) (Single & Pair Skating or Ice Dance) are automatically entitled to serve as International Officials of the same function in the respective discipline(s).

c) ISU Referees in the respective discipline(s) (Single & Pair Skating or Ice Dance) are automatically entitled to serve as ISU or International Judges in the respective discipline(s).

d) International Referees in the respective discipline(s) (Single & Pair Skating or Ice Dance) are automatically entitled to serve as International Judges in the respective discipline(s).

e) Officials must adhere fully to the ISU Code of Ethics.

f) Officials must:
   - keep themselves fully informed about all matters concerning the performance of their duties in the current General Regulations and Special Regulations and Technical Rules, ISU Communications and Manuals, Handbooks and Booklets and all updates published on the ISU website;
   - have a satisfactory standard of eyesight, hearing and general physical condition in order to perform their duties;
   - comport themselves with discretion as ISU appointed Officials;
   - not show bias for or against any Competitor on any grounds;
   - be completely impartial and neutral at all times;
   - base their marks and decisions only on the performance and not be influenced by reputation or past performance;
   - disregard public applause or disapproval;
   - not discuss their marks or decisions and marks or decisions of other Officials during the competition with any person other than the Referee and/or, for members of the Technical Panel only, the other members of the Technical Panel of the part of the discipline in which they are serving;
   - not serve as television commentator nor engage in communication with the media, television, or others except through the Referee of the part of the Competition in which they are serving;

- not bring any form of electronic communication system to the panels stand.

1. Duties and powers of the Referee

– checks the observance of all eligibility Rules, the ISU clearance certificates and verifies the correctness of the calculation setup, unless the ISU Event Coordinator is present;
– together with the medical advisor/competition physician, approves any medical appliances containing metal or hard plastic in advance of the competition (see Rule 141, paragraph 2);
– conducts all the draws for the starting order and (Ice Dance only) Pattern Dance(s);
– manages the panel of Judges (including ensuring that they do not, while on the Judges stand, bring notes from previously awarded scores or any form of electronic communication, nor communicate with one another or indicate errors by action or sound, nor look at marks being inputted by Judges sitting alongside them) and acts as the responsible spokesperson of the Officials should the need arise;
– conducts the Initial Judges Meeting (see Rule 431) and a meeting with the Judges prior to every Segment of an event according to the ISU guidelines;
– checks the compliance of warm up periods with Rule 514;
– times the duration needed by the Competitors to take the starting position and decides upon subsequent possible withdrawal or deduction (see Rule 350);
– takes necessary actions related to delayed start or restart as per Rule 515, including instructing the person in charge of music to stop or restart the music of a Competitor;
– decides whether the condition of the ice permits the holding of the event;
– decides upon all protests on the event concerned;
– alters the shape and size of the skating surface if unfavorable circumstances arise;
– accepts in agreement with the Organizing ISU Member or affiliated Club, another rink for the holding of the event;
– times, with the assistance of a timekeeper, the program as skated, possible interruptions (see Rules 503 and 515), Dance Lifts (Ice Dance only with the assistance of a second timekeeper);
– times the tempo of Pattern Dance music chosen by Couples and the tempo of specified parts of Short Dance (when applicable) (Ice Dance only);
– decides upon the deductions according to Rule 353, paragraph 1. n) for the following violations: program time, interruptions in performing the program, interruption of the program with allowance to resume from the point of interruption, part of the costume/decoration falls on the ice, Dance Lifts exceeding permitted duration (Ice Dance only) and tempo specifications (Ice Dance only);
– together with the panel of Judges, decides upon the deductions according to

Rule 353, paragraph 1. n) for the violation of the following requirements or restrictions: costume/prop, choreography and (Ice Dance only) music. Those deductions are applied according to the opinion of the majority of the panel which includes all the Judges and the Referee. No deduction is made in case of a 50:50 split vote;

- judges the complete event;
- suspends skating until the order is restored in case the public interrupts the competition or interferes with its orderly conduct;
- excludes Competitors from the event, if necessary;
- removes Judge(s) from the panel, if necessary and based on important and valid reasons;
- forbids any coach at any time during the course of the competition to be on any part of the ice surface of the rink on which the competition is taking place;
- decides any matter concerning breaches of the ISU Constitution or Regulations;
- participates in the victory ceremony;
- moderates the Round Table Discussion according to ISU guidelines (see Rule 431)
- prepares the Report on the event according to ISU guidelines (see Rule 433).

2. Duties of the Judges

- use the whole range of Grade of Execution values and Program Component marks;
- mark independently and whilst judging do not converse with another Judge or indicate errors by action or sound;
- do not use previously prepared marks;
- together with the Referee, decide upon the deductions according to Rule 353, paragraph 1. n) for the violation of the following requirements or restrictions: costume/prop, choreography and (Ice Dance only) music. Those deductions are applied according to the opinion of the majority of the panel which includes all the Judges and the Referee. No deduction is made in case of a 50:50 split vote
- attend the Initial Judges Meeting (see Rule 431) and the meeting held by the Referee prior to every Segment of an event according to the ISU guidelines;
- attend the Round Table Discussion moderated by the Referee according to ISU guidelines (see Rule 431).

3. Duties and powers of the Technical Controller

- authorizes or corrects the deletion of elements;
- supervises the Technical Specialists and Data Operator and proposes corrections, if necessary, respecting any performed element and Level of Difficulty identified by the serving Technical Specialist and Assistant Technical Specialist. However, if both Technical Specialists disagree with

a correction asked for by the Technical Controller, the initial decision of the Technical Specialist and Assistant Technical Specialist stands. In the case a disagreement about an element and/or Level of Difficulty exists between the Technical Specialist and Assistant Technical Specialist, the decision of the Technical Controller prevails;

The Technical Controller is responsible to verify that the performed elements and Levels of Difficulty identified in accordance with the above-mentioned procedure are correctly introduced into the system by the Data Operator and the performed elements and Levels of Difficulty may be validated only upon formal confirmation by the Technical Controller that such verification has been completed;

- authorizes or corrects the identification of Illegal Elements/Movements;
- authorizes or corrects the identification of a Fall, which occurred in any part of the program, including introductory and concluding steps/movements in Pattern Dance. However if both Technical Specialists disagree with a correction on Illegal Elements/Movements or Falls asked for by the Technical Controller, the initial decision of the Technical Specialist and Assistant Technical Specialist stands;
- attends the sufficient practice sessions of the competition to make necessary preparation;
- conducts the Initial Technical Panel Meeting (see Rule 432) and a meeting with the Technical Specialists and the Data & Replay Operators prior to every Segment of an event according to the ISU guidelines;
- moderates the Technical Panel Discussion according to ISU guidelines (see Rule 432);
- if possible, assists the Referee in moderating the Round Table Discussion according to ISU guidelines (see Rule 431);
- prepares the Report on the event according to ISU guidelines (see Rule 433);
- participates in the victory ceremony.

4) Communication between the Referee and the Technical Controller

If possible, there should be direct communication between the Referee and the Technical Controller during the competition.

5. Duties of the Technical Specialist/Assistant Technical Specialist

The Technical Specialist

- identifies and calls the performed elements;
- identifies and calls correct Levels of Difficulty of the performed elements;
- identifies Illegal Elements/Movements;
- identifies a fall, which occurred in any part of the program, including introductory and concluding steps/movements in Pattern Dance;
- identifies and deletes additional elements.

The Assistant Technical Specialist is also part of the decision making process as outlined under the duties of the Technical Controller.

The Technical Specialist and the Assistant Technical Specialists

- attend the sufficient practice sessions of the competition to make necessary preparation;
- attend the Initial Technical Panel Meeting (see Rule 432) and the meeting held by the Technical Controller prior to every Segment of an event according to the ISU guidelines;
- attend the Technical Panel Discussion moderated by the Technical Controller according to ISU guidelines (see Rule 432).

6. Duties of the Data & Replay Operator

The Data Operator

- inputs the called elements;
- inputs the Levels of Difficulty of the elements as called;
- corrects elements or Levels of Difficulty as instructed by the Technical Controller;
- indicates additional elements identified by the computer to the Technical Specialists and to the Technical Controller.

The Replay Operator

- records each element separately to enable the Technical Panel, the Referee and the Judges to review the element when necessary.

The Data & Replay Operators

- support the Technical Specialists and the Technical Controller;
- attend the Initial Technical Panel Meeting (see Rule 432) and the meeting held by the Technical Controller prior to every Segment of an event according to the ISU guidelines;
- attend, when possible, the Technical Panel Discussion moderated by the Technical Controller according to ISU guidelines (see Rule 432).

Rule 431
Meetings at Competitions for Referees and Judges

1. Initial Judges Meeting

Judges of International Competitions, ISU Championships, and Olympic Winter Games must attend a closed meeting (Initial Judges Meeting) moderated by the Chair or a member of the respective Technical Committee, if present, and the Referee, and, if possible, the Technical Controller, held before the competition starts. The moderators must draw to the attention of

the Judges in brief summary form the Rules relating to the duties of Judges and the marking of Single or Pair Skating or Ice Dance with special attention being paid to any changes in Rules or in their interpretation or clarification that have been officially published.
At ISU Championships and the Olympic Winter Games, this meeting must be moderated by the Chair or a member of the respective Technical Committee for the purposes of Rule 417, paragraph 6.

2. Round Table Discussion

Judges of International Competitions, ISU Championships and Olympic Winter Games, must attend a closed meeting (Round Table Discussion) with the Referee and, if possible, the Technical Controller, held as soon as possible after conclusion of each discipline but not later than the following day of the discipline in question.
The Referee must include video from the competition in the RTD. This is mandatory in all International Competitions, and ISU events.
The following topics will be discussed during the meeting, with a purpose of feedback among Judges and to reach a consensus to assist the ISU for future judging guidelines:

- general quality of skating;
- range of points for elements and each of the Program Components of selected Skaters, without establishing a range of acceptable scores (this will be established by the Officials Assessment Commission in accordance with the procedure established by the ISU Council);
- application and validity of current regulations;
- possible improvements to the marking guide, equipment, the print-outs and the flow of information both internally and externally.

During the discussion the Judges will be encouraged to express their opinions. The discussion will not be used to criticize individuals judging the discipline in question.

Rule 432
Meetings at Competitions for Technical Panels

1. Initial Technical Panel Meeting

Technical Controllers, Technical Specialists and Data & Replay Operators of International Competitions, ISU Championships, and Olympic Winter Games must attend a closed meeting (Initial Technical Panel Meeting) moderated by the Technical Controller held before the competition starts. The moderators must draw to the attention of the Officials in brief summary form the Rules relating to the duties of Technical Panels and the calling specifications with special attention being paid to any changes in calling specifications or in their interpretation or clarification that have been

officially published.
At ISU Championships, the Olympic Winter Games and ISU Grand Prix of Figure Skating Final (combined Junior and Senior), this meeting must be moderated by the Chair or a member of the respective Technical Committee and a Sports Director for the purposes of Rule 417, paragraph 7.

2. Technical Panel Discussion

Technical Controllers, Technical Specialists and, when possible, Data & Replay Operators of International Competitions, ISU Championships and Olympic Winter Games, must attend a closed meeting (Technical Panel Discussion) moderated by the Technical Controller, held as soon as possible after conclusion of each discipline but not later than the following day of the discipline in question.
The following topics will be discussed during the meeting, with a purpose of feedback among Officials and to reach a consensus to assist the ISU for future guidelines:

- evaluation of teamwork;
- evaluation of service;
- difficult decisions;
- possible improvements to the calling specifications, the equipment, the print-outs and the flow of information both internally and externally.

Rule 433
Reports

1. The Referee shall prepare a report on a standard form of the competition (except for Basic Novice International Competitions), in which the following areas are to be identified:
   - standard of organization:
   - standard of skating in each segment:
   - standard of judging and the ability of each judge to communicate his understanding of the rules and their applications;
   - summary of Round Table Discussion
   - additional remarks (if necessary);
   - proposals for improvement;
   - correctness of the calculation setup (except for ISU Events);
   - documentation on withdrawals.

   A report has to be written only if the competition category fulfils the requirement of an International competition, i.e. more than one ISU Member took part. If this is not the case, the Referee must notify the ISU Secretariat.

2. The Technical Controller shall prepare a report (except for Basic Novice International Competitions) on a standard form of the competition, in which the following areas are to be identified:
   – evaluation of teamwork;
   – evaluation of the Technical Specialist work;
   – evaluation of the Assistant Technical Specialist work;
   – evaluation of the Data Operator work;
   – evaluation of the Replay Operator work;
   – summary of Technical Panel Discussion;
   – additional remarks (if necessary);
   – proposals for improvement.

3. The Referee and the Technical Controller shall send their respective reports within fourteen (14) days following the competition to the ISU Secretariat. The ISU Secretariat shall send copies of the reports as soon as possible to the following persons:
   a) the Chair and each member of the respective Technical Committee;
   b) the respective Sports Directors.

Rule 434 - 439 (reserved)

D. Evaluation of service by Officials

Rule 440

1. Officials Assessment Commission

a) The composition and the duties of the Officials Assessment Commission (OAC) are defined in Article 23 of the Constitution and the related Rules of Procedure published in an ISU Communication.

b) For ISU Championships and the Olympic Winter Games two (2) OAC members for each discipline (Single & Pair Skating and Ice Dance) shall be appointed by the ISU President as per Article 16, paragraph 2.f) of the Constitution. They shall proceed to the relevant evaluations, if possible on site, immediately after the conclusion of each competition.

c) For all other ISU Events two (2) OAC members for each discipline (Single & Pair Skating and Ice Dance) shall be appointed by the ISU President as per Article 16, paragraph 2.f) of the Constitution. They shall proceed to the relevant evaluation as soon as possible at their respective residence.

2. Evaluation of anomalies in the Judges scores at ISU Events (and Olympic Winter Games, Winter Youth Olympic Games and Olympic Qualifying Figure Skating Competitions)

a) The OAC members shall prepare a report for each competition including the identification of those anomalies in the Judges scores (as per Article 23 of the Constitution and the related Rules of Procedure published in an ISU Communication) that, in the opinion the OAC members, must be considered as errors warranting an Assessment. This report shall be made available without delay to the respective Technical Committee through the ISU Secretariat.

b) The respective Technical Committee shall proceed with its evaluation of the OAC report and subsequent report to the ISU Secretariat as soon as possible. If the Technical Committee disagrees on any determination of errors warranting an Assessment, the OAC members must be consulted to achieve a consensus. If a disagreement prevails, the unresolved cases will be finally decided by the respective Sports Directors.

3. Evaluation of the decisions of the Technical Panel and of the decisions of/conduct of competition by the Referee at ISU Events (and Olympic Winter Games, Winter Youth Olympic Games and Olympic Qualifying Figure Skating Competitions)

a) If:
- the OAC members appointed to the competition (on site or off site) and/or,
- the ISU President and/or,
- the ISU Council and/or,
- the respective Sports Director(s), and/or,
- the respective Technical Committee and/or,
- for decisions of the Technical Panel only: the serving Referee as per the outcome of the Judges Round Table Discussion (Judges or the Referee noticed some discrepancies),

believe that a decision by the Referee or by the Technical Panel (Technical Controller, Technical Specialists and Data & Replay Operators) or the conduct of the competition by the Referee may warrant an Assessment, they shall file a report to the Vice-President Figure Skating outlining this identified potential wrong decision or wrong conduct of the competition in consistent and detailed remarks with applicable Rules.

b) Upon receipt, the Vice-President Figure Skating shall inform the respective Technical Committee and shall send the report together with the relevant video recordings, if applicable, independently to four (4) Officials, selected by the Vice-President Figure Skating, for review at their residence. Each selected Official shall not be informed of the identity of the other selected Officials. The selected Officials must all be from different ISU Members and shall be as follows:
   (i) for Technical Panels: one (1) or two (2) ISU Technical Controller(s) and one (1) or two (2) ISU Technical Specialist(s),
   for Referees: three (3) ISU Referees),
   from a different ISU Member than the Skater(s) and Official(s) concerned
   (ii) one ISU Technical Committee member of the respective discipline from a different ISU Member than the Skater(s) and Official(s) concerned. If a member of the respective Technical Committee is subject to the evaluation, then no Technical Committee member shall be included in the selected Officials and shall be replaced by a second Technical Controller or Technical Specialist (respectively by a fourth ISU Referee) as per sub-paragraph i) above.

c) The selected Officials shall forward their conclusion whether an Assessment is warranted independently from each other to the Vice-

President Figure Skating. For the issuing of an Assessment to the Official(s) concerned, at least two of the selected Officials must confirm that an Assessment is warranted.

d) In case an Assessment involving the Technical Panel is warranted, the Vice-President Figure Skating shall check the video recordings including the audio records of the Technical Panel discussions in order to establish if such decision has been made as a majority or split decision of the Technical Panel or if the decision was due to an erroneous operation by the Data Operator or the Replay Operator.

e) If applicable, the Vice-President Figure Skating shall submit a detailed report to the ISU Council, which finally decides upon an Assessment.

4. Evaluation of reports of Referees and reports of Technical Controllers

a) The respective Technical Committee shall rate the quality of the reports of the Referees and of the reports of the Technical Controllers, based on documentation delivered, as per Rule 433, as very good, good, acceptable/average, mediocre or poor. These details shall be added to the records of the concerned Referees and Technical Controllers.

b) Unacceptable performance relating to the late submission of a report or the submission of an incomplete report by a Referee or a Technical Controller is subject to an Assessment decided upon by the respective Technical Committee.

5. Evaluation of mandatory attendance

Unacceptable performance relating to not attending sufficient practice sessions, whole or part of a competition, official meeting or draw, as specified in the respective duties of Officials as per Rule 430, without justified cause, is subject to an Assessment decided upon by the respective Technical Committee or, in case the concerned Official is a member of the respective Technical Committee, by the Council upon recommendation of the Vice President, based on reports received from:

- for Technical Panel members: the respective Referee and/or other members of the respective Technical Panel,
- for Referees: the Organizing Committee and/or members of the respective panel of Judges,
- for Judges: the respective Referee,

including credible and verified evidence.

6. Criteria for Assessments

a) Referees:

Assessment 1

i) report submitted late or incomplete (see paragraph 4);

Assessment 2

i) report submitted late or incomplete (see paragraph 4) after having received Assessment 1;
ii) error(s) in conducting a competition (see paragraph 3);
iii) not or only partly attending, competition, draws or official meetings (see paragraph 5).

Assessment 3

i) report submitted late or incomplete (see paragraph 4) after having received Assessment 2;
ii) error(s) in conducting a competition (see paragraph 3), after having received an Assessment 2.

Assessment 4

i) report submitted late or incomplete (see paragraph 4) after having received Assessment 3;
ii) error(s) in conducting a competition (see paragraph 3), after having received Assessment 3;
iii) not or only partly attending the competition, draws or official meetings (see paragraph 5) after having received Assessment 2 or 3.

b) Judges

Assessment 1

i) errors (see paragraph 2);
ii) not or partly attending official meetings (see paragraph 5).

Assessment 2

i) errors (see paragraph 2) after having received Assessment 1;
ii) not or partly attending official meetings (see paragraph 5) after receiving Assessment 1;
iii) not or only partly attending the competition (see paragraph 5).

Assessment 3

i) errors (see paragraph 2) after receiving Assessment 2;
ii) not or partly attending official meetings (see paragraph 5) after receiving Assessment 2.

Assessment 4

i) errors (see paragraph 2) after receiving Assessment 3;
ii) not or partly attending official meetings (see paragraph 5) after receiving Assessment 3;
iii) not or only partly attending the competition (see paragraph 5) after having received Assessment 2 or 3.

c) Technical Controllers

Assessment 1

i) report submitted late or incomplete (see paragraph 4);
ii) being part of the majority in a wrong decision of the Technical Panel involving a striking difference per Skater/Pair/Couple in a Segment (see paragraph 3);
iii) not properly checking and confirming the data input performed by the Data Operator (see paragraph 3);
iv) not attending the sufficient practice sessions (see paragraph 5).

Assessment 2

i) report submitted late or incomplete (see paragraph 4) after having received Assessment 1;
ii) being part of the majority in a wrong decision of the Technical Panel involving a striking difference per Skater/Pair/Couple in a Segment (see paragraph 3) after having received Assessment 1;
iii) not properly checking and confirming the data input performed by the Data Operators (see paragraph 3) after having received Assessment 1;
iv) not attending the sufficient practice sessions (see paragraph 5) after having received Assessment 1.
v) not or only partly attending the competition or official meetings (see paragraph 5).

Assessment 3

i) report submitted late or incomplete (see paragraph 4) after having received Assessment 2;
ii) being part of the majority in a wrong decision of the Technical Panel involving a striking difference per Skater/Pair/Couple in a Segment (see paragraph 3) after having received Assessment 2;
iii) being part of the majority in a wrong decision of the Technical Panel involving a difference of more than 4 points per Skater/Pair/Couple in a Segment (see paragraph 3);
iv) not properly checking and confirming the data input performed by the Data Operator (see paragraph 3) after having received Assessment 2;

v) not attending the sufficient practice sessions (see paragraph 5) after having received Assessment 2.

Assessment 4

i) report submitted late or incomplete (see paragraph 4) after having received Assessment 3;
ii) being part of the majority in a wrong decision of the Technical Panel involving a striking difference per Skater/Pair/Couple in a Segment (see paragraph 3) after having received Assessment 3;
iii) being part of the majority in a wrong decision of the Technical Panel involving a difference of more than 4 points per Skater/Pair/Couple in a Segment (see paragraph 3) after having received Assessment 2 or 3;
iv) not properly checking and confirming the data input performed by the Data Operator (see paragraph 3) after having received Assessment 3;
v) not attending the sufficient practice sessions (see paragraph 5) after having received Assessment 3;
vi) not or only partly attending the competition or official meetings (see paragraph 5) after having received Assessment 2 or 3.

d) Technical Specialists

Assessment 1

i) being part of the majority in a wrong decision of the Technical Panel involving a striking difference per Skater/Pair/Couple in a Segment (see paragraph 3);
ii) not attending the sufficient practice sessions or not or partly attending official meetings (see paragraph 5).

Assessment 2

i) being part of the majority in a wrong decision of the Technical Panel involving a striking difference per Skater/Pair/Couple in a Segment (see paragraph 3) after having received Assessment 1;
ii) not attending the sufficient practice sessions or official meetings (see paragraph 5) after having received Assessment 1.
iii) not or only partly attending the competition (see paragraph 5).

Assessment 3

i) being part of the majority in a wrong decision of the Technical Panel involving a striking difference per Skater/Pair/Couple in a Segment (see paragraph 3) after having received Assessment 2;
ii) being part of the majority in a wrong decision of the Technical Panel involving a difference of more than 4 points per Skater/Pair/Couple in a Segment (see paragraph 3);

iii) not attending the sufficient practice sessions or not or partly attending official meetings (see paragraph 5) after having received Assessment 2;

Assessment 4

i) being part of the majority in a wrong decision of the Technical Panel involving a striking difference per Skater/Pair/Couple in a Segment (see paragraph 3) after having received Assessment 3;
ii) being part of the majority in a wrong decision of the Technical Panel involving a difference of more than 4 points per Skater/Pair/Couple in a Segment (see paragraph 3) after having received Assessment 2 or 3;
iii) not attending the sufficient practice sessions or not or partly attending official meetings (see paragraph 5) after having received Assessment 3;
iv) not or only partly attending the competition (see paragraph 5) after having received Assessment 2 or 3.

e) Data & Replay Operators

Assessment 1

i) erroneous operation (see paragraph 3);
ii) not or partly attending official meetings (see paragraph 5).

Assessment 2

i) erroneous operation (see paragraph 3) after having received Assessment 1;
ii) not or partly attending official meetings (see paragraph 5) after receiving Assessment 1;
iii) not or only partly attending the competition (see paragraph 5).

Assessment 3

i) erroneous operation (see paragraph 3) after receiving Assessment 2;
ii) not or partly attending official meetings (see paragraph 5) after receiving Assessment 2.

Assessment 4

i) erroneous operation (see paragraph 3) after receiving Assessment 3;
ii) not or partly attending official meetings (see paragraph 5) after receiving Assessment 3;
iii) not or only partly attending the competition (see paragraph 5) after having received Assessment 2 or 3.

7. Demotions

a) In the case that an accumulation of Assessments for an Official is reaching Assessment 4, the Official concerned and his ISU Member shall

be notified through the ISU Secretariat about the possible demotion. The Official will have the right to ask within 5 days upon receipt of the notification for a meeting with at least three (3) members of:

- for Referees, Technical Controllers, Technical Specialists and Data & Replay Operators: the Figure Skating Branch of the ISU Council,
- for Judges: the respective Technical Committee,

and additional experts as appointed by the Council, to give his explanations for one or several of the Assessments. If available and applicable, the Official may use the respective video recordings to support his explanations. Such meeting shall be held as soon as possible at a date and place determined by the Council. Based on a report of the meeting, the Council, respectively the Technical Committee, shall decide upon the confirmation or revocation of the Assessments.

b) Any travel, board and lodging or other expenses incurred by the Official concerned relating to the explanation meeting as per paragraph a) above shall be for the Official's account if all the Assessments, despite the explanations received, are confirmed by the Council, respectively the Technical Committee. The ISU shall only reimburse such expenses if at least one of the Assessments is revoked.

c) In case the Assessment 4, despite the explanation received as per paragraph a) above, is confirmed by the Council, respectively the Technical Committee, or in case the Official concerned has not used his right to ask for an explanation meeting as per paragraph a) above, the concerned Official shall be demoted as follows, with immediate effect:

(i) For Referees:
- an ISU Referee demoted for service as a Referee shall be transferred to the list of International Referees and to the list of ISU Judges;
- an ISU Referee demoted for service as a Judge shall be transferred to the list of International Referees but not to the list of ISU Judges;
- an International Referee demoted for service as a Referee shall be deleted from the list of International Referees and transferred to the list of International Judges;
- an International Referee demoted for service as a Judge shall be deleted from the list of International Referees but not transferred to the list of International Judges;

(ii) For Judges, Technical Controllers, Technical Specialists and Data & Replay Operators:
- a demoted ISU Official shall be transferred to the list of International Officials;

- a demoted International Official shall be deleted from the list of International Officials.

8. Issuing, effectiveness and duration of validity of Assessments and demotions

a) The ISU Body which has decided upon an Assessment (see paragraphs 2 to 5) or a demotion (see paragraph 7) shall instruct the ISU Secretariat to notify the Official concerned with a copy to his ISU Member and the respective Technical Committee.

b) An Assessment or a demotion shall be effective only:
   (i) for the qualification, i.e. Referee, Judge, Technical Controller, Technical Specialist or Data & Replay Operator, and
   (ii) in the discipline, i.e.:
      - for Referees and Judges: Single & Pair Skating or Ice Dance;
      - for Technical Controllers and Technical Specialists: Single Skating or Pair Skating or Ice Dance;
      - for Data & Replay Operators: all disciplines;

   in which the service of the concerned Official was warranted such Assessment or demotion.

c) Each Assessment shall remain valid for the current season plus additional two (2) seasons and shall count during such period of time towards an accumulation of Assessments.

d) A demotion shall remain valid until the concerned Official is reinstated in the position formerly held by having fulfilled the requirements for first appointment to this position, as per Rules 410 to 416.

e) If the majority of Judges (or Referees when serving as Judges) of an ISU Member have been suspended for misconduct and/or demoted subsequently to Assessments and/or warranted Assessments over a period of several years, the Council may decide that this ISU Member will be warned or will lose the right to appoint Judges to ISU Championships and/or Olympic Winter Games and/or International Competitions for such a period as the Council may decide. In the exercise of this power, however, the Council shall not generally take into consideration cases having occurred more than five years before the decision.

Rules 441-449 (reserved)

REGULATIONS FOR EXHIBITIONS

Rule 450
Exhibitions

1. Negotiations concerning exhibitions of any kind cannot be conducted with the Skaters, but only with the ISU Member to which the Skater belongs.
2. Notice of exhibitions in a foreign country must be sent by both ISU Members involved to the Director General of the ISU. An ISU Member holding exhibitions in a foreign country must apply for consent from the ISU Member for that country. All financial arrangements must be approved by the ISU Members concerned.
3. If a Skater/Couple stays for a period of more than two months in a foreign country, the ISU Member of the Skater/Couple may provide the foreign ISU Member with a general authorization for exhibitions and so delegate to such ISU Member the responsibility for the application of the eligibility Rules of the ISU and of the foreign ISU Member. The Skater/Couple must, in such case, announce to the foreign ISU Member each request for exhibitions.
4. The provisions of Rule 109, paragraphs 2 and 3, also apply to exhibitions.
5. Eligible persons may take part in ice shows, exhibitions, commercial motion pictures or television shows, in which ineligible persons (as defined in Rule 102, paragraph 2) constitute the majority of the participants, only with the prior approval of the ISU Member concerned.
6. In exceptional cases, the respective Sports Director(s) of the ISU may permit eligible persons to take part in exhibitions in countries in which there is no ISU Member.
7. No exhibitions by a Competitor in an ISU Championship may be given at the site of the Championship or in its neighborhood within a period of fourteen (14) days before the beginning of the event.
8. For exhibitions during Figure Skating Competitions see Rule 365.
9. Competitors in the World Championships invited to participate in the ISU Exhibition Tour may not exhibit more than twenty (20) times in the immediately following forty (40) days. Exceptions may be made by the respective Sports Director(s). No exhibition tours which include such Competitors may take place during such periods unless organized and/or approved by the ISU.
10. Only ISU or ISU Members have the right to organize or authorize exhibition tours in which eligible Skaters take part.

11. Eligible persons are permitted to appear in only one skating exhibition within one day. If the period covered by a series of exhibitions exceeds a week, there should be a day without an exhibition every three or four days. However, special arrangements may be approved by the respective Sports Director(s) for exhibitions in a foreign country which is geographically isolated and which has little opportunity otherwise to see such exhibitions.
12. The Council of the ISU may make financial arrangements for the benefit of the ISU with ISU Members organizing a series of exhibitions.
13. Participants may receive money for Figure Skating exhibitions at ISU Championships, but only with the approval of the ISU Member to which the Skater belongs and to be paid to the Skater only through the respective ISU Member.
14. The provisions of Rule 137 (reimbursement of expenses) also apply to exhibitions.
15. For exclusion from exhibitions, see Rule 104, paragraph 16, and Rule 125, paragraph 4.

Rules 451 – 499 (reserved)

II. TECHNICAL RULES
SINGLE & PAIR SKATING / ICE DANCE

GENERAL TECHNICAL RULES
IN SINGLE & PAIR SKATING AND ICE DANCE

Rule 500
Definition of the skate blade

Figure Skating blades used during competitions must be sharpened to produce a flat to concave cross section without change to the width of the blade as measured between the two edges. However, a slight tapering or narrowing of the cross section of the blade is permitted.

Rule 501
Clothing

1. At ISU Championships, the Olympic Winter Games and International Competitions, the clothing of the Competitors must be modest, dignified and appropriate for athletic competition – not garish or theatrical in design. Clothing may, however, reflect the character of the music chosen. The clothing must not give the effect of excessive nudity inappropriate for the discipline. Men must wear full length trousers and must not wear tights. In addition, in Ice Dance, Ladies must wear a skirt. Accessories and props are not permitted.
   Clothing that does not adhere to these guidelines will be penalized by a deduction (see Rule 353, paragraph 1.n).
   For Ice Dance, exceptions to the restrictions may be announced by the IDTC if appropriate to the Rhythms selected for the Short Dance.
2. The decorations on costumes must be non-detachable. Part of the costume or decoration falling on the ice will be penalized by a deduction (see Rule 353, paragraph 1.n).

Rule 502
Duration of skating

The time must be reckoned from the moment the Skater (either Skater for Pair Skating and Ice Dance) begins to move or to skate until arriving at a complete stop at the end of the program.

1. Short Program
   Ladies, Men, Pairs for both Senior and Junior:
   Two (2) minutes and forty (40) seconds.

2. Free Skating

Senior:

Men	4 1/2	minutes
Ladies	4	minutes
Pairs	4 1/2	minutes

Junior:

Men	4	minutes
Ladies	3 1/2	minutes
Pairs	4	minutes

Starting with the season 2018-2019:

Free Skating:

Senior:

Men, Ladies, Pairs 4 minutes

Junior:

Men, Ladies, Pairs 3 ½ minutes

3. Short Dance for both Senior and Junior

Two (2) minutes and fifty (50) seconds (unless otherwise decided by the Ice Dance Technical Committee and announced in an ISU Communication).

4. Free Dance

Senior	4	minutes
Junior	3 1/2	minutes

The Skater/Pair/Couple is allowed to finish the Short Program, Short Dance, Free Skating or Free Dance within ten (10) seconds plus or minus the required time. If the Skater/Pair/Couple fails to finish his/their Short Program, Short Dance, Free Skating or Free Dance program within the allowed range of time, there should be a deduction (see Rule 353, paragraph 1.n) for up to every five (5) seconds lacking or in excess. Any element in Short Program, Short Dance, Free Skating or Free Dance started after the required time (plus the ten (10) seconds allowed) must not be identified by the Technical Panel and will have no value. The timekeepers must inform the Referee. If the duration of the program is thirty (30) seconds or more under the required time range, no marks will be awarded. These deductions are not applicable under the Rule 515, paragraphs 7-8.

Rule 503
Falls and Interruptions

1. A Fall is defined as loss of control by a Skater with the result that the majority of his/her own body weight is on the ice supported by any other part of the body other than the blades e.g. hand(s), knee(s), back, buttock(s) or any part of the arm. For every Fall there shall be a deduction (see Rule 353, paragraph 1.n).
2. An Interruption is defined as the time elapsed between the moment a Skater stops performing the program until the moment he resumes performing the program. For every Interruption of more than ten (10) seconds, there shall be a deduction (see Rule 353, paragraph 1.n.). If an Interruption lasts more than forty (40) seconds, an acoustic signal is produced by the Referee and the Skater/Pair/Couple is withdrawn. For cases of interruption due to adverse conditions unrelated to the Skater or related to the Skater's health or equipment, see Rule 515.

Rule 504
Marking of Short Program/Short Dance and Free Skating/Free Dance

1. Elements Score

As per Rule 353, paragraphs 1. a) and b), the Scale of Values chart of the elements of Short Program/Short Dance and Free Skating/Free Dance is published and updated in ISU Communications. This Scale of Value contains Base Values of all the elements and the numerical values of the seven Grades of Execution.

a) Base Value

The Technical Panel will determine the name and, when required, the Level of Difficulty of every element. Base Values of elements are measured in points and increase with the increasing difficulty of the elements. The difficulty of the elements depends:

Single & Pair Skating	Ice Dance
- in jumps (Singles and Pairs) and throw jumps (Pairs): on the names of the jumps or the throw jumps listed in order of their difficulty (Toeloop, Salchow, Loop, Flip, Lutz, Axel) and the number of revolutions; - in lifts (pairs): on the Groups of the lifts (1 - 5), their names and Levels	on their Levels of Difficulty

of Difficulty; - in twist lifts (Pairs): on the number of revolutions and Levels of Difficulty; - in death spirals (Pairs): on the names and Levels of Difficulty; - in other elements: on their names and Levels of Difficulty.	

b) Levels of Difficulty of elements

The description of characteristics (features) that give an element a certain Level of Difficulty is published and updated in ISU Communications.

Single & Pair Skating	Ice Dance
Lifts, twist lifts and death spirals (pairs), spins and steps (singles and pairs) are divided depending on their difficulty in five (5) Levels of Difficulty according to the number of features achieved: Basic Level – in case of no features, Level 1 – in case of one feature, Level 2 – in case of two features, Level 3 – in case of three features and Level 4 – in case of four or more features.	All Required Elements except Choreographic Elements are divided into Levels of Difficulty. For Lifts, Spins, Twizzles and Step Sequences, there are 4 Levels depending on Difficulty. For Step Sequences, there is an additional Basic Level in which the Element is completed, but the criteria for Level 1 have not been achieved. For Choreographic Elements, no Level is given, but the Element is confirmed if the minimum requirements defining the Element are met.

c) Grade of Execution (GOE)

Each Judge will mark the quality of execution of every element depending on the positive features of the execution and errors on the seven Grades of Execution scale: +3, +2, +1, Base Value, -1, -2, -3.

Starting with the season 2018 – 2019 there will be up to 11 Grades of Execution.

As per Rule 353, paragraphs 1.h) (i) and (ii) and 1.i), jump combinations, jump sequences (in Single & Pair Skating) and Combination Lifts (in Ice Dance) are evaluated as "one unit".

The guidelines for marking GOEs are published and updated in ISU Communications.

2. Illegal Elements/Movements

Every Illegal Element/Movement as defined in Rules 610 (Single & Pair Skating), 709, paragraph 3 (Short Dance), 710, paragraph 3 (Free Dance) performed in the program will be penalized by a deduction (see Rule 353, paragraph 1.n). If an Illegal Element/Movement is performed during the

execution of any element, the deduction for an Illegal Element/Movement will apply and the element will be called:

- Single & Pair Skating: Basic Level if the requirements for at least Basic Level are fulfilled;
- Ice Dance: Level 1 if the requirements for at least Level 1 are fulfilled.

Otherwise the element will be called "no level"

3. Program Component Score

a) Definition of Program Components

The Skater's/Pair's/Couple's whole performance is evaluated by five (5) Program Components: Skating Skills, Transitions, Performance, Composition, Interpretation of the Music/Timing (for Ice Dance).
For Pair Skating and Ice Dance there must be equal demonstration of the criteria by both Skaters.

Skating Skills

Defined by overall cleanness and sureness, edge control and flow over the ice surface demonstrated by a command of the skating vocabulary (edges, steps, turns etc.), the clarity of technique and the use of effortless power to accelerate and vary speed.
In evaluating the Skating Skills, the following must be considered:

- Use of deep edges, steps and turns;
- Balance, rhythmic knee action and precision of foot placement;
- Flow and glide;
- Varied use of power, speed and acceleration;
- Use of multi directional skating;
- Use of one foot skating.

Transitions

The varied and purposeful use of intricate footwork, positions, movements and holds that link all elements.
In evaluating the Transitions, the following must be considered:

- Continuity of movements from one element to another (all disciplines);
- Variety (including variety of holds in Ice Dance);
- Difficulty;
- Quality.

Performance

Involvement of the Skater/Pair/Couple physically, emotionally and intellectually as they deliver the intent of the music and composition.
In evaluating the Performance, the following must be considered:

- Physical, emotional, intellectual involvement and projection;
- Carriage & Clarity of movement;

- Variety and contrast of movements and energy;
- Individuality / personality;
- Unison and "oneness" (Pair Skating, Ice Dance);
- Spatial awareness between partners - management of the distance between Skaters and management of changes of hold (Pair Skating, Ice Dance).

Composition

An intentionally developed and/or original arrangement of all types of movements according to the principles of musical phrase, space, pattern, and structure.

In evaluating the Composition, the following must be considered:

- Purpose (idea, concept, vision, mood);
- Pattern / ice coverage;
- Multidimensional use of space and design of movements;
- Phrase and form (movements and parts structured to match the musical phrase);
- Originality of the composition.

Interpretation of the Music /Timing (for Ice Dance)

The personal, creative, and genuine translation of the rhythm, character and content of music to movement on ice.

In evaluating the Interpretation of the Music (/Timing), the following must be considered:

- Movement and steps in time to the music (Timing);
- Expression of the music's character / feeling and rhythm, when clearly identifiable;
- Use of finesse (*) to reflect the details and nuances of the music;
- Relationship between the Skaters reflecting the character and rhythm of the music (Pair Skating, Ice Dance);
- Skating primarily to the rhythmic beat for Short Dance and keeping a good balance between skating to the beat and melody in the Free Dance (Ice Dance).

*Finesse is the Skater's refined, artful manipulation of music details and nuances through movement. It is unique to the Skater/Skaters, and demonstrates an inner feeling for the music and the composition. Nuances are the personal ways of bringing subtle variations to the intensity, tempo, and dynamics of the music made by the composer and/or musicians.

b) Marking of Program Components

After completion of a program, as per Rule 353, paragraph j), each Judge marks the Program Components on a scale from 0.25 to 10 with increments of 0.25. Points given by the Judges correspond to the following degrees of the Program Components: less than 1 – extremely poor, 1 - very poor, 2 - poor, 3 - weak, 4 - fair, 5 - average, 6 - above average, 7 - good, 8 - very good, 9 - 10 - outstanding.

Increments are used for evaluation of performances containing some features of one degree and some of the next degree.
Guidelines for marking Program Components are published and updated in ISU Communications.

4. Deductions

Deductions are applied for certain violations of the Regulations (see Rule 353).

Rules 505 – 510 (reserved)

III. TECHNICAL RULES FOR COMPETITIONS IN SINGLE & PAIR SKATING AND ICE DANCE

A. General

Rule 511
Announcement of entries and panels of Officials

For the purpose of verifying the compliance of competitions and categories other than ISU Events, with requirements for World Ranking consideration as published in ISU Communications, preliminary unofficial announcements of entries and Officials must be made by the Organizing Committee at any time after the closing of entries but at the latest seven (7) days before the competition starts. This provision is optional for competitions and categories not considered for World Ranking.

Rule 512
Draws

1. The draws for the starting order of all Segments are made publicly by the Referee. The Referee should ask the Organizing Committee to check the correct spelling of the names of the Competitors and Officials.

2. Starting numbers shall be drawn by each Competitor, if present, by official representatives of their ISU Member or by members of the Organizing Committee.

3. The official announcement of the entries and of the panels of Officials is made by the Referee of each competition at the time of the first starting order draw of that competition. Different procedures may apply for ISU Events and the Olympic Winter Games.

Rule 513
Draws for starting orders

The draw for starting order of the Competitors for each Segment of the event shall be conducted as follows:

1. Short Program/Short Dance or Pattern Dance(s):
   a) i) select a Competitor to draw for the ISU Member to start the draw;
      ii) draw the starting order of the Competitors proceeding in alphabetical order by ISU Member from the ISU Member drawn to start;

This procedure does not apply to ISU Championships and Olympic Winter Games (see Rule 520, paragraph 1).

b) For the Pattern Dances only, if two Pattern Dances are to be skated:
   - the Couples are divided into two groups. If the number of Couples is not evenly divisible by two, the second group shall contain one more Couple than the first group;
   - the second Pattern Dance is started by the first Couple in the second group followed by the rest of the Couples in the order in which they were drawn. The Couples in group one follow group two, starting with Couple number one of the first group;
   - an exception to this Rule is permissible when there are only two Couples. In this case, the first Couple would start each Pattern Dance. This procedure must be agreed to by both Couples.

2. Free Skating/Free Dance

a) The starting order is determined from the result of the Short Program/Short Dance or Pattern Dance(s);

b) As soon as possible after the determination of the results of the preceding Segment, the Referee, in the presence of at least one Competitor, shall divide the Competitors into the smallest possible number of equal groups (see Table I of the Technical Rules), in the order in which they finished the preceding Segment;

c) If the number of Competitors is not equally divisible, the last group to skate (and as many preceding groups as necessary) must contain one more Competitor than the first group. The lowest placed group must skate first, the next lowest second and so on;

d) If two or more Competitors are tied for the same place at the end of the preceding Segment, the Competitors concerned shall be drawn in the same group. If necessary the immediately preceding group shall be smaller by the number of Competitors so added to the following group;

e) The order of skating in each group shall be determined by lot and each Competitor shall be drawn in the order of placement in the preceding Segment of the competition, i.e. with the best placed Competitor drawing first and including those tied. The order of the draw between the tied Competitors shall first be determined by a separate draw prior to the main draw.

<u>For ISU Events, Olympic Winter Games and Winter Youth Olympic Games:</u>

<u>f) *Ladies and men:* The order of skating for the final two groups (i.e. with the best placed Competitors) will be drawn in four subgroups.</u>

<u>(i) The top three finishers in the short program will be the last to skate in the final group and will draw from the first subgroup.</u>

(ii) The fourth-, fifth- and sixth-place finishers in the short program will be the first to skate in the final group and will draw from the second subgroup.

(iii) The seventh-, eight- and ninth-place finishers in the short program will be the last to skate in the second-to-last group and will draw from the third subgroup.

(iv) The 10th-, 11th- and 12th-place finishers in the short program will be the first to skate in the second-to-last group and will draw from the fourth subgroup.

g) *Pairs:* The order of skating for the final two groups (i.e. with the best placed Competitors) will be drawn in four subgroups.

(i) The top two finishers in the short program will be the last to skate in the final group and will draw from the first subgroup.

(ii) The third- and fourth-place finishers in the short program will be the first to skate in the final group and will draw from the second subgroup.

(iii) The fifth- and sixth-place finishers in the short program will be the last to skate in the second-to-last group and will draw from the third subgroup.

(iv) The seventh- and eighth-place finishers in the short program will be the first to skate in the second-to-last group and will draw from the fourth subgroup.

h) *Ice Dance:* The order of skating for the final two groups (i.e. with the best placed Competitors) will be drawn in four subgroups.

(i) The top three finishers in the Short Dance will be the last to skate in the final group and will draw from the first subgroup.

(ii) The fourth- and fifth-place finishers in the Short Dance will be the first to skate in the final group and will draw from the second subgroup.

(iii) The sixth-, seventh- and eighth-place finishers in the Short Dance will be the last to skate in the second-to-last group and will draw from the third subgroup.

(iv) The ninth- and 10th-place finishers in the Short Dance will be the first to skate in the second-to-last group and will draw from the fourth subgroup.

i) If the size of the subgroups is smaller than the maximum, the subgroups will be adjusted accordingly: in case of even number of entries the subgroups are equal in size, in case of odd number of entries the later skating subgroup is larger by one entry than the previous skating subgroup.

For other International Competitions the Organizers have the option of determining the order of skating according to sub-paragraphs e) to h) of this Rule or using the reverse order of places in the Short Program/Short Dance for

the purpose. The method used should be mentioned in the Announcement of the competition.

3. If one or more Competitors having obtained scores that would have qualified them for the next Segment decide to withdraw their participation before the beginning of that Segment, then the open spot(s) will not be substituted by any other Competitor(s) and the number of maximum qualified Competitors for that Segment will be reduced by the number of withdrawn Competitors.

   If the withdrawal(s) is announced after the draw for the starting order of the following Segment, then the starting order and the warm-up groups will not be changed and the spot of the withdrawn Competitor(s) remains empty.

4. If one or more Competitors having obtained scores that would have qualified them for the next Segment are disqualified before the beginning of that Segment, then the open spot(s) will be filled by the first placed Competitor(s), who, in the concerned Segment, initially had not reached the following Segment.

   Such Competitors will receive the first starting numbers in the first warm-up group and this warm-up group will be complemented with the concerned number of Competitors. If necessary:

   (i) the starting order of the added Competitors in the first subgroup will be decided by an additional separate draw;

   (ii) Rule 514, paragraph 3 shall apply.

Rule 514
Warm-up periods

1. Warm-up periods must be allotted to all Competitors.

2. The duration and maximum size of each warm-up (see Table II of the Technical Rules) are:
   a) Single Skating – Short Program, Free Skating – six (6) minutes duration – maximum six (6) Competitors;
   b) Pair Skating – Short Program, Free Skating – six (6) minutes duration – maximum four (4) Pairs;
   c) Ice Dance – Pattern Dance(s) – four (4) minutes duration: one (1) minute without music followed by three (3) minutes of the 6th (last) tune of the ISU Ice Dance music – maximum five (5) Couples;
   d) Ice Dance – Short Dance, Free Dance – five (5) minutes duration – maximum five (5) Couples;

3. In the event one or more Competitors tied or added as per Rule 513, paragraph 4 are included in the same group, the maximum number permitted to warm up at the same time may be exceeded by one Competitor in Single

Skating. However, if the maximum number permitted is exceeded by two or more Single Skaters or by one or more Pairs or Ice Dance Couples, the group in question shall be divided into two subgroups with a separate warm-up for each of them. The Competitors of each subgroup skate immediately after the warm-up of their subgroup to be immediately followed by the competitive skating in each instance.

4. Warm-ups must immediately precede the competitive skating of those in that warm-up group. In case of an interruption in the Segment due to unforeseen circumstances of more than ten (10) minutes, the Competitors concerned will be permitted a second warm-up period of the duration mentioned at paragraph 2, depending on the Segment.

Rule 515
Allowance of a delayed start or restart

1. If the tempo or quality of the music is deficient, the Competitor/s may restart the program from its beginning, provided the Referee is informed within 30 seconds after the start of the program.
2. If an interruption or stop in the music or any other adverse condition unrelated to the Competitor/s or his/their equipment, such as lighting, ice-condition etc. occurs, the Competitor/s must stop skating at the acoustic signal of the Referee. The Competitor/s shall continue from the point of interruption immediately after the problem has been solved. If, however, the interruption lasts longer than ten minutes, there shall be a second warm-up period according to Rule 514, paragraph 2.
3. If a Competitor gets injured during the performance or another adverse condition related to him or his equipment (such as health problems or unexpected damage to his/their clothing or equipment) impedes his/their skating, the Competitor/s must stop skating. If he/they don't stop, they will be ordered to do so by an acoustic signal of the Referee.
   a) If the adverse conditions can be remedied without delay and the Competitor/s resumes skating his/their program without reporting to the Referee, the Referee will apply a deduction for interruption as per Rule 353, paragraph 1.n) depending on the duration of the interruption. This time period commences immediately after the Competitor/s stops performing the program or is ordered to do so by the Referee, whichever is earlier. During this time period, the Competitor's music will continue playing. If the Competitor/s does not resume skating his/their program within forty (40) seconds, he/they shall be considered withdrawn;
   b) If the adverse conditions cannot be remedied without delay and the Competitor/s reports to the Referee within forty (40) seconds, the

Referee will allow an additional up to three (3) minutes period for the Competitor/s to resume skating. Then the Referee commands to stop the music. The additional time period commences at the moment the Competitor/s reports to the Referee. The Referee will apply a deduction as per Rule 353, paragraph 1.n) for the whole interruption. If the Competitor/s does not report to the Referee within forty (40) seconds or does not resume skating his/their program within the additional three (3) minutes period, he/they shall be considered withdrawn.

The Referee shall first decide and indicate to the Technical Controller where the point of interruption is. If the Technical Panel decides that the interruption occurred at the entrance to or during an element, the Technical Panel shall call the element according to the usual principles of calling, and the Technical Controller shall inform the Referee of those decisions. The point from where the Competitor/s has to continue the program shall be decided and communicated to the Competitor/s, the Judges and the Technical Panel by the Referee: it is either the point of interruption, or, if the Technical Panel has decided that the interruption occurred at the entrance to or during an element, the point immediately following this element.

4. If a Competitor with the first starting number in the group gets injured or any other adverse condition related to him or his equipment impeding his/their skating occurs during the warm-up period and time before the start of the program is not sufficient to remedy the adverse condition, the Referee shall allow the Competitor up to three (3) additional minutes before he/they is/are called to the start. No deduction as per paragraph 3 above applies.
5. If any Competitor/s between entering the ice and being called to the start is/are injured or any other adverse condition related to him/them or his/their equipment impeding his/their skating occurs and time before the start of the program is not sufficient to remedy the adverse condition, the Referee shall allow the Competitor/s up to three (3) additional minutes before he/they is called to the start. The Referee will apply a deduction as per paragraph 3.b) above.
6. If any Competitor/s between being called to the start and taking the starting position is/are injured or any other adverse condition related to him/them or his/their equipment impeding his/their skating occurs, Rule 350, paragraph 2 applies. If sixty (60) seconds are not enough to remedy the adverse condition, the Referee shall allow the Competitor up to three (3) additional minutes applying a deduction for the whole interruption as per paragraph 3.b) above.
7. With respect to adverse conditions related to a Competitor or his equipment as per paragraph 3.b) above, only one restart per program is allowed. In case of a second stop of the performance due to an adverse condition related to

the Competitor/s or his/their equipment as per paragraph 3.b) above, the Competitor/s concerned shall be considered withdrawn.

8. If Competitor/s do not complete the program, no marks are awarded and the Competitor/s is/are withdrawn.

B. ISU Championships – Special Technical Rules

Rule 520
Draws for Competitors

1. At all ISU Championships, the draw for the Short Program/Short Dance will be held according to the latest World Standings in the following way. World Standings are established as per the procedure published in an ISU Communication:

   a) the Competitors will be divided into two approximately equal parts with the higher ranked Competitors being drawn in the second part (thereafter called the part "skating later") and the lower ranked Competitors and Competitors with no ranking being drawn in the first part (thereafter called the part "skating earlier"); if the number of Competitors cannot be divided equally by two, the part "skating later" will include one Skater/Pair/Couple more than the part "skating earlier". In case of ties in the World Standings on the border of the two parts, all those tied Competitors will be included in the part "skating later";
   b) if the number of Competitors with no ranking is bigger than the number of places in the part "skating earlier", some of these Competitors (decided by draw) will be in the part "skating later". For this draw all Competitors with no ranking will participate to draw for as many positions as necessary for the part "skating later";
   c) the number of Competitors of the last and the next to last starting order groups will be determined according to Table I of the Technical Rules using the total number of Competitors;
   d) there will be a free draw among Competitors with the highest ranking to skate in the last starting order group of the "skating later" part and a free draw among Competitors with the next highest ranking to skate in the next to last starting order group of the "skating later" part.
      (i) In case of ties in the World Standings on the border between the last and next to last starting order groups, all those tied Competitors will be included in the last starting order group and the next to last starting order group will be smaller by the number of Competitors so added to the last starting order group. In the event the last starting order group exceeds the maximum size permitted by two or more Single Skaters, or by one or more Pair/Ice Dance Couple, the last starting order group will be divided into two subgroups and there will be a free draw in each of the subgroups;
      (ii) In case of ties in the World Standings on the border between the next to last starting order group and the rest of the Competitors, all those tied Competitors will be included in the next to last starting

order group. In the event the next to last starting order group exceeds the maximum size permitted by two or more Single Skaters, or by one or more Pair/Ice Dance Couple, the next to last starting order group will be divided into two subgroups and there will be a free draw in each of the subgroups;

e) there will be a free draw among all other Competitors of the "skating later" part;

f) there will be one more free draw among all Competitors of the "skating earlier" part. For this draw all these Competitors will be divided into two parts: Competitors with and without ranking, so that Competitors with ranking will draw for the later skating starting numbers;

g) starting numbers are drawn according to the World Standings with the highest ranked Competitor being drawn first, the next ranked Competitor – second etc. In cases of ties in the World Standings there will be a separate draw between tied Competitors to decide the order of the main draw.

h) Warm up groups will be determined according to Table II of the Technical Rules, using the total number of Competitors. In case of adjustments to the last and next to last starting order groups as per paragraph d) (i) and (ii) above, warm up groups will be adjusted similarly to provide a separate warm up to each of those starting order groups and possible subgroups.

2. Based on the result of the Short Program/Short Dance, the Competitors placed 1-24 in Single Skating 1-16 in Pair Skating and 1-20 in Ice Dance only shall qualify for the final Free Skating/Free Dance.

3. The starting order for the Free Skating/Free Dance will be according to Rule 513, paragraph 2. f) Ladies & Men, 2. g) Pairs and 2. h) Ice Dance.

4. If a tie in the Short Program/Short Dance occurs for the 24th place in Single Skating or for the 16th place in Pair Skating or for the 20th place in Ice Dance, all the tied Competitors will qualify for the Free Skating/Free Dance for which they will be drawn in the same (first) group. If necessary, Rule 514, paragraph 3 shall apply.

Rule 521
Judges draws

1. For ISU Championships, the panel of Judges shall consist only of Judges on the current lists of ISU Judges and all Judges must be designated ISU.
2. Each ISU Members must enter annually by October 1st Judges by number only and indicate with the entry, in which ISU Championships and the individual discipline of this Championships they intend to participate in the respective draw ceremony.

   The entries must be made for the following Championships

   a) From European ISU Members only for the

      (i) European Figure Skating Championships

   b) From all ISU Members for the

      (i) Four Continents Figure Skating Championships;

      (ii) World Junior Figure Skating Championships;

      (iii) World Figure Skating Championships.
3. Each ISU Member must indicate with the entry, if Judges will be available to judge the Pair discipline.
4. Principles of entries and restrictions

   a) Each ISU Member may enter one Judge by number (not by name) in each discipline in which Judges of this ISU Member are qualified to judge and in which that ISU Member has participated with at least one (1) Skater/Pair/Couple in the same Championships of the preceding year, who has/have finished at least one segment of the individual competition;

   b) An ISU Member can be represented with Judges in all four (4) disciplines within one Championships;

   c) A Judge must not serve in more than one (1) discipline per ISU Championships;

   d) The ISU Members will enter with their Judges' name(s) for the individual ISU Championships and disciplines including a substitute Judge, in which they have been drawn, <u>twenty-one (21)</u> days prior to the first Initial Judges Meeting of the ISU Championships concerned;

   e) Any necessary changes of the Judges nominated must be communicated by the fastest electronic means to the respective Sports Directors, to the ISU Secretariat and to the Organizing Committee;

   f) A Judge nominated by the ISU Member, who is present and available, must serve if drawn;

g) The ISU President or the ISU Vice President Figure Skating may update the restrictions under paragraphs a) and c) above for any Championships in which not enough Judges are available to compose the panels of Judges.

5. Draw Procedure

a) The draw procedure of the panels of Judges for all ISU Championships will take place annually between October 1st and November 15th. The draw is open to all ISU Members who may send one (1) Representative at their own expense. The draw shall take place in Switzerland in the presence of a certified Swiss auditor. The ISU President will appoint the person(s) who will conduct the draw;

b) Each draw to compose the panels of Judges starts with a preliminary draw upon the order of disciplines which will be drawn first;

c) Each panel of Judges will consist of a maximum of nine (9) Judges but not less than eight (8) Judges;

d) There will be a separate draw for the panel of Judges for each Segment of each Championships (Short Program, Short Dance, Free Skating and Free Dance), at the main draw as to paragraph 5.a) and on site of the Championships concerned;

e) The draw procedure of each ISU Championships is explained separately;

f) The seating order of the Judging Panel shall be conducted manually by the Referee of the discipline in the Judges room for each Segment of the event.

6. European Figure Skating Championships, World Figure Skating Championships and World Junior Figure Skating Championships

a) Only European ISU Members who have entered with Judges for the European Figure Skating Championships will participate in the draws for the composition of the panel of Judges for this Championships. All ISU Members who have entered with Judges for the World and World Junior Figure Skating Championships will participate in the draws for the composition of the panel of Judges for the respective Championships;

b) A random draw will be made to determine the order of disciplines in which the panels will be drawn, however the Pair panel has to be drawn last;

c) Thirteen (13) ISU Members are drawn amongst all ISU Members, who have entered a Judge by number for this particular discipline and who have participated with a Skater/Pair/Couple in the same discipline of the corresponding Figure Skating Championships of the immediate preceding year, provided that this Skater/Pair/Couple had finished at least one Segment;

d) If there are not enough ISU Members available, there will be an additional draw amongst all ISU Members available and willing to serve but not yet represented in the panel concerned, to complete the panel of Judges with up to thirteen (13) Judges;

e) On the site of the Championships, an open random draw will be conducted by the Referee, forty-five (45) minutes prior to the skating of each Segment of the respective discipline, in the presence of all Judges drawn for this discipline, to complete the panel of nine (9) Judges;

f) For the first Segment of the discipline nine (9) Judges will be drawn from all thirteen (13) Judges drawn for the respective discipline. The seating order will be identical to the order the Judges are drawn;

g) For the second Segment of the discipline, the four (4) Judges not drawn for the first Segment will automatically be assigned to be in the panel of nine (9) Judges for the second Segment and all other Judges serving already in the first Segment will participate in the draw to complete the panel of nine (9) Judges. A separate draw will be held for the seating order of the nine (9) judges;

h) If at the time of the Championships, Judges drawn and entered by name, are not present, and their entered substitute Judge is not available, they will not be substituted by another Judge from the same ISU Member, who was not entered as a substitute Judge in the discipline in question; A separate draw amongst all Judges present and available for the discipline concerned but not represented already in the particular panel will complete the panel to the possible maximum of nine (9) Judges if needed;

i) If there still are not enough ISU Members available to draw up to 4 Judges for the second Segment, up to four (4) alternate Judges are drawn in a priority order amongst all ISU Members, which are entered and eligible for the discipline in question and which are not yet represented in the panel in question. Those alternate Judges must be called on site if needed with a seven (7) days benchmark of notice. If, however, on site not enough Judges as drawn are available to serve in the designated panel and the alternate Judge(s) cannot be anymore called, a draw must be made amongst all present Judges of ISU Members not represented in the panel, willing, qualified and available to serve, who are already drawn in another panel of the Championships.

7. Four Continents Figure Skating Championships

a) ISU Members of the Four Continents will have first priority in the draws for the composition of the panel of Judges for the Four Continents Figure Skating Championships.

b) A random draw will be made to determine the order of disciplines in which the panels will be drawn, however the Pair panel has to be drawn last.

Nine (9) ISU Members are drawn amongst all the ISU Members of the Four Continents, who have entered a Judge by number for this particular discipline and who have participated with a Skater/Pair/Couple in the same discipline of the Four Continents Figure Skating Championships of the immediate preceding year, provided that this Skater/Pair/Couple had finished at least one segment (see also paragraph 4. a).

d) If there are not enough Judges from the respective Four Continents ISU Members available to complete one panel with a maximum of nine (9) Judges, all ISU Members of the Four Continents will participate in this draw, provided such ISU Members have been entered a Judge by number as to paragraph 2 and 3.

e) However, if there are not enough Judges amongst the ISU Members of the Four Continents available to serve in the panel of the first segment, e.g. the Pair panel, all ISU Members of the Four Continents already drawn in any of the panels and who have indicated that their Judge(s) are additionally available for Pair Skating, will have priority in the completion of the Pair Championship's panel. If there are still not enough Judges available and drawn for the first segment of the Pair Championships, additional ISU Members from European Members need to be drawn to complete the panel of Judges.

f) The procedure described under paragraph 7. d) and e) will be followed for all draws for each first Segment of the Championships. If there still are not enough ISU Members available to draw up to 4 Judges for the second segment, up to 4 alternate Judges are drawn in a priority order amongst all ISU Members, which are entered and eligible for the discipline in question and which are not yet represented in the panel in question.

g) An additional draw for the seating order of the panel of Judges for the first Segment and the second segment of each discipline of the Championships will be made on site. The Judges on the panel will remain.

8. a) The President may, in exceptional cases, authorize modifications in the application of this Rule. If the President is not reachable in a timely fashion, the Vice President for Figure Skating may authorize such

modifications in exceptional circumstances. On site of a Championships, if both the President and the Vice President for Figure Skating are not present, then the ISU Representative may authorize such modifications in exceptional circumstances.

b) For post entries relating to all deadlines included in this Rule, Rule 115, paragraph 6 applies.

I. Size of starting order groups Rule 513

Number of Comp-etitors	Singles Free Skating Maximum 6	Pairs Free Skating Maximum 4	Free Dance Maximum 5
2	1 + 1	1 + 1	1 + 1
3	1 + 2	1 + 2	1 + 2
4	2 + 2	2 + 2	2 + 2
5	2 + 3	2 + 3	2 + 3
6	3 + 3	3 + 3	3 + 3
7	3 + 4	3 + 4	3 + 4
8	4 + 4	4 + 4	4 + 4
9	4 + 5	3 + 3 + 3	4 + 5
10	5 + 5	3 + 3 + 4	5 + 5
11	5 + 6	3 + 4 + 4	3 + 4 + 4
12	6 + 6	4 + 4 + 4	4 + 4 + 4
13	4 + 4 + 5	3 + 3 + 3 + 4	4 + 4 + 5
14	4 + 5 + 5	3 + 3 + 4 + 4	4 + 5 + 5
15	5 + 5 + 5	3 + 4 + 4 + 4	5 + 5 + 5
16	5 + 5 + 6	4 + 4 + 4 + 4	4 + 4 + 4 + 4
17	5 + 6 + 6	3 + 3 + 3 + 4 + 4	4 + 4 + 4 + 5
18	6 + 6 + 6	3 + 3 + 4 + 4 + 4	4 + 4 + 5 + 5
19	4 + 5 + 5 + 5	3 + 4 + 4 + 4 + 4	4 + 5 + 5 + 5
20	5 + 5 + 5 + 5	4 + 4 + 4 + 4 + 4	5 + 5 + 5 + 5
21	5 + 5 + 5 + 6	3 + 3 + 3 + 4 + 4 + 4	4 + 4 + 4 + 4 + 5
22	5 + 5 + 6 + 6	3 + 3 + 4 + 4 + 4 + 4	4 + 4 + 4 + 5 + 5
23	5 + 6 + 6 + 6	3 + 4 + 4 + 4 + 4 + 4	4 + 4 + 5 + 5 + 5
24	6 + 6 + 6 + 6	4 + 4 + 4 + 4 + 4 + 4	4 + 5 + 5 + 5 + 5
25	5 + 5 + 5 + 5 + 5	3 + 3 + 3 + 4 + 4 + 4 + 4	5 + 5 + 5 + 5 + 5
26	5 + 5 + 5 + 5 + 6	3 + 3 + 4 + 4 + 4 + 4 + 4	4 + 4 + 4 + 4 + 5 + 5
27	5 + 5 + 5 + 6 + 6	3 + 4 + 4 + 4 + 4 + 4 + 4	4 + 4 + 4 + 5 + 5 + 5
28	5 + 5 + 6 + 6 + 6	4 + 4 + 4 + 4 + 4 + 4 + 4	4 + 4 + 5 + 5 + 5 + 5
29	5 + 6 + 6 + 6 + 6	3 + 3 + 3 + 4 + 4 + 4 + 4 + 4	4 + 5 + 5 + 5 + 5 + 5
30	6 + 6 + 6 + 6 + 6	3 + 3 + 4 + 4 + 4 + 4 + 4 + 4	5 + 5 + 5 + 5 + 5 + 5
31	5 + 5 + 5 + 5 + 5 + 6	3 + 4 + 4 + 4 + 4 + 4 + 4 + 4	4 + 4 + 4 + 4 + 5 + 5 + 5
32	5 + 5 + 5 + 5 + 6 + 6	4 + 4 + 4 + 4 + 4 + 4 + 4 + 4	4 + 4 + 4 + 5 + 5 + 5 + 5
33	5 + 5 + 5 + 6 + 6 + 6	3 + 3 + 3 + 4 + 4 + 4 + 4 + 4 + 4	4 + 4 + 5 + 5 + 5 + 5 + 5
34	5 + 5 + 6 + 6 + 6 + 6	3 + 3 + 4 + 4 + 4 + 4 + 4 + 4 + 4	4 + 5 + 5 + 5 + 5 + 5 + 5
35	5 + 6 + 6 + 6 + 6 + 6	3 + 4 + 4 + 4 + 4 + 4 + 4 + 4 + 4	5 + 5 + 5 + 5 + 5 + 5 + 5
36	6 + 6 + 6 + 6 + 6 + 6	4 + 4 + 4 + 4 + 4 + 4 + 4 + 4 + 4	4 + 4 + 4 + 4 + 5 + 5 + 5 + 5

II. Size of warm-up groups Rule 514

Number of Comp-etitors	Singles Short Program Free Skating Maximum 6	Pairs Short Program Free Skating Maximum 4	Pattern Dance, Short Dance, Free Dance Maximum 5
4	4	4	4
5	5	2 + 3	5
6	6	3 + 3	3+3
7	3 + 4	3 + 4	3+4
8	4 + 4	4 + 4	4+4
9	4 + 5	3 + 3 + 3	4+5
10	5 + 5	3 + 3 + 4	5+5
11	5 + 6	3 + 4 + 4	3+4+4
12	6 + 6	4 + 4 + 4	4+4+4
13	4 + 4 + 5	3 + 3 + 3 + 4	4+4+5
14	4 + 5 + 5	3 + 3 + 4 + 4	4+5+5
15	5 + 5 + 5	3 + 4 + 4 + 4	5+5+5
16	5 + 5 + 6	4 + 4 + 4 + 4	4+4+4+4
17	5 + 6 + 6	3 + 3 + 3 + 4 + 4	4+4+4+5
18	6 + 6 + 6	3 + 3 + 4 + 4 + 4	4+4+5+5
19	4 + 5 + 5 + 5	3 + 4 + 4 + 4 + 4	4+5+5+5
20	5 + 5 + 5 + 5	4 + 4 + 4 + 4 + 4	5+5+5+5
21	5 + 5 + 5 + 6	3 + 3 + 3 + 4 + 4 + 4	4+4+4+4+5
22	5 + 5 + 6 + 6	3 + 3 + 4 + 4 + 4 + 4	4+4+4+5+5
23	5 + 6 + 6 + 6	3 + 4 + 4 + 4 + 4 + 4	4+4+5+5+5
24	6 + 6 + 6 + 6	4 + 4 + 4 + 4 + 4 + 4	4+5+5+5+5
25	5 + 5 + 5 + 5 + 5	3 + 3 + 3 + 4 + 4 + 4 + 4	5+5+5+5+5
26	5 + 5 + 5 + 5 + 6	3 + 3 + 4 + 4 + 4 + 4 + 4	4+4+4+4+5+5
27	5 + 5 + 5 + 6 + 6	3 + 4 + 4 + 4 + 4 + 4 + 4	4+4+4+5+5+5
28	5 + 5 + 6 + 6 + 6	4 + 4 + 4 + 4 + 4 + 4 + 4	4+4+5+5+5+5
29	5 + 6 + 6 + 6 + 6	3 + 3 + 3 + 4 + 4 + 4 + 4 + 4	4+5+5+5+5+5
30	6 + 6 + 6 + 6 + 6	3 + 3 + 4 + 4 + 4 + 4 + 4 + 4	5+5+5+5+5+5
31	5 + 5 + 5 + 5 + 5 + 6	3 + 4 + 4 + 4 + 4 + 4 + 4 + 4	4+4+4+4+5+5+5
32	5 + 5 + 5 + 5 + 6 + 6	4 + 4 + 4 + 4 + 4 + 4 + 4 + 4	4+4+4+5+5+5+5
33	5 + 5 + 5 + 6 + 6 + 6	3 + 3 + 3 + 4 + 4 + 4 + 4 + 4 + 4	4+4+5+5+5+5+5
34	5 + 5 + 6 + 6 + 6 + 6	3 + 3 + 4 + 4 + 4 + 4 + 4 + 4 + 4	4+5+5+5+5+5+5
35	5 + 6 + 6 + 6 + 6 + 6	3 + 4 + 4 + 4 + 4 + 4 + 4 + 4 + 4	5+5+5+5+5+5+5
36	6 + 6 + 6 + 6 + 6 + 6	4 + 4 + 4 + 4 + 4 + 4 + 4 + 4 + 4	4+4+4+4+5+5+5+5

III. TECHNICAL RULES
SINGLE & PAIR SKATING

A. Single and Pair Skating Elements

Rules 600 – 609 (reserved)

Rule 610
Requirements to elements of Single and Pair Skating and Illegal Elements/Movements

Jump elements
A "jump element" is defined as an individual jump, a jump combination or a jump sequence.

Jump Combinations
In a jump combination the landing foot of a jump is the take off foot of the next jump. One full revolution on the ice between the jumps (free foot can touch the ice, but no weight transfer) keeps the element in the frame of the definition of a jump combination.
If the jumps are connected with a non-listed jump, the element is called a jump sequence. However half-loop when used in combinations/sequences is considered as a listed jump with the Value of a Loop.
If the first jump of a two-jump-combination fails to be successful and turns out as a “non-listed jump”, the unit will still be considered as a jump combination.

Jump Sequences
A jump sequence may consist of any number of jumps of any number of revolutions that may be linked by non-listed jumps and/or hops immediately following each other while maintaining the jump rhythm (knee); there can be no turns/steps, crossovers or stroking during the sequence (Turns are three turns, twizzles, brackets, loops, counters, rockers. Steps are toe steps, chasses, mohawks, choctaws, curves with change of edge, cross-rolls).
A jump sequence, consisting of only one listed jump together with other non-listed jumps is not considered a jump sequence, but will count as a solo jump.

Spins
Positions: There are 3 basic positions: camel (free leg backwards with the knee higher than the hip level, however Layback, Biellmann and similar variations are still considered as upright spins), sit (the upper part of the skating leg at least parallel to the ice), upright (any position with skating leg extended or slightly bent which is not a camel position).

Layback Spin is an upright spin in which head and shoulders are leaning backward with the back arched. The position of the free leg is optional. *Sideways Leaning Spin* is an upright spin in which head and shoulders are leaning sideways and the upper body is arched. The position of the free leg is optional.
A Spin that has no basic position with 2 revolutions will receive no Level and no value, however a spin with less than three rotations is considered as a skating movement and not a spin.
The minimum number of revolutions required in a position is two (2) without interruption. In case this requirement is not fulfilled, the position is not counted.
In any spin change of edge can be counted only if done in a basic position.
Variations of the position of the head, arms or free leg, as well as fluctuations of speed are permitted.
The change of foot in any spin must be preceded and followed by a spin position with at least three (3) revolutions.
If the Skater(s) falls when entering a spin, a spin or a spinning movement is allowed immediately after this fall (for filling time purpose) with this spin/movement not being counted as an element.
If the spinning centers (before and after the change of foot) are too far apart and the criteria of "two spins" is fulfilled (there is a curve of exit after the first part and the curve of entry into the second part), only the part before the change of foot will be called and considered for Levels features.

Spin combinations: Must include a minimum of two different basic positions with 2 revolutions in each of these positions anywhere within the spin. <u>To receive full value, a Spin combination must include all three basic positions.</u> The number of revolutions in positions that are non-basic is counted in the total number of revolutions. Changing to a non-basic position is not considered as a change of position. A change of foot may be executed in the form of a step over or a jump. The change of foot and the change of position may be made either at the same time or separately.

Spin in one position and (in Singles) Flying spin (which means a spin with a flying entrance and no change of foot and position): positions that are not basic are allowed, counted in the total number of revolutions required by the Rules, but are not valid for Level features.
In spins in one position and flying spins the concluding upright position at the end of the spin (final wind-up) is not considered to be another position independent of the number of revolutions, as long as in such a final wind-up no additional feature is executed (change of edge, variation of position etc).

When the spin is commenced with a jump, no previous rotation on the ice before the take-off is permitted and a step over must be considered by the Judges in the Grade of Execution.

Step Sequences
All step sequences should be executed according to the character of the music. Short stops in accordance with the music are permitted. Step Sequences must fully utilize the ice surface.
Turns and steps must be balanced in their distribution throughout the sequence.

Illegal/Elements Movements are:
- somersault type jumps;
- lifts with wrong holds;
- lifts with more than 3 ½ revolutions of the Man;
- spinning movements in which the Man swings the Lady around in the air while holding her hand or foot;
- twist-like or rotational movements during which the Lady is turned over with her skating foot leaving the ice;
- rotational movements with the grip of one of the partners on the leg, arm and neck of the other partner;
- jumps of one of the partners towards the other partner;
- lying and prolonged and/or stationary kneeling on both knees on the ice at any moment.

B. Single Skating

Rule 611
Short Program Singles

1. a) The Short Program for Single Skating (Senior and Junior) consists of seven (7) required elements. The sequence of the elements is optional;
   b) No extra marks are obtained by extending the program to the maximum time allowed if this is unnecessary. The music is chosen by each Competitor, vocal music with lyrics is permitted;
   c) If an unprescribed or additional element (performed) substitutes a required element (not performed), the respective box will be blocked and this performed element will be considered as not according to the requirements (no value).
   d) Unlisted or additional elements such as jumps, spins, steps or repetitions, even of failed elements, are not marked and consequently do not block a “box” (spot) of another type of elements.

2. **The Senior Short Program** shall consist of the following required elements:

Men
a) Double or triple Axel Paulsen;
b) Triple or quadruple jump immediately preceded by connecting steps and/or other comparable Free Skating movements;

c) Jump combination consisting of a double jump and a triple jump or two triple jumps or a quadruple jump and a double jump or a triple jump;
d) Flying spin;
e) Camel spin or sit spin with only one change of foot;
f) Spin combination with only one change of foot;
g) Step sequence fully utilizing the ice surface.

Ladies
a) Double or triple Axel Paulsen;
b) Triple jump immediately preceded by connecting steps and/or other comparable Free Skating movements;
c) Jump combination consisting of a double jump and a triple jump or two triple jumps;
d) Flying spin;
e) Layback/sideways leaning spin or sit or camel spin without change of foot;
f) Spin combination with only one change of foot;
g) Step sequence fully utilizing the ice surface.

3. **The Junior Short Program** shall consist of the following required elements, which form three groups. The groups that are effective on July 1st of each year are:

2016-2017
Men
a) Double or triple Axel Paulsen;
b) Double or triple Loop jump immediately preceded by connecting steps and/or by other comparable Free Skating movements;
c) Jump combination consisting of a double and a triple jump or two triple jumps;
d) Flying camel spin;
e) Sit spin with only one change of foot;
f) Spin combination with only one change of foot;
g) Step sequence fully utilizing the ice surface.

Ladies
a) Double Axel Paulsen;
b) Double or triple Loop jump immediately preceded by connecting steps and/or by other comparable Free Skating movements;
c) Jump combination consisting of two double jumps or one double and one triple jump or two triple jumps;
d) Flying camel spin;
e) Layback / sideways leaning spin or sit spin without change of foot;
f) Spin combination with only one change of foot;
g) Step sequence fully utilizing the ice surface.

2017-2018

Men

a) Double or triple Axel Paulsen;
b) Double or triple Lutz jump immediately preceded by connecting steps and/or by other comparable Free Skating movements;
c) Jump combination consisting of a double and a triple jump or two triple jumps;
d) Flying sit spin;
e) Camel spin with only one change of foot;
f) Spin combination with only one change of foot;
g) Step sequence fully utilizing the ice surface.

Ladies

a) Double Axel Paulsen;
b) Double or triple Lutz jump immediately preceded by connecting steps and/or by other comparable Free Skating movements;
c) Jump combination consisting of two double jumps or one double and one triple jump or two triple jumps;
d) Flying sit spin;
e) Layback / sideways leaning spin or camel spin without change of foot;
f) Spin combination with only one change of foot;
g) Step sequence fully utilizing the ice surface.

2018-2019

Men

a) Double or triple Axel Paulsen;
b) Double or triple Flip jump immediately preceded by connecting steps and/or by other comparable Free Skating movements;
c) Jump combination consisting of a double and a triple jump or two triple jumps;
d) Flying camel spin;
e) Sit spin with only one change of foot;
f) Spin combination with only one change of foot;
g) Step sequence fully utilizing the ice surface.

Ladies

a) Double Axel Paulsen;
b) Double or triple Flip jump immediately preceded by connecting steps and/or by other comparable Free Skating movements;
c) Jump combination consisting of two double jumps or one double and one triple jump or two triple jumps;
d) Flying camel spin;
e) Layback / sideways leaning spin or sit spin without change of foot;
f) Spin combination with only one change of foot;

g) Step sequence fully utilizing the ice surface.

4. **Remarks**

Jumps

b) For Senior Men any triple or quadruple jump is permitted, when a quadruple jump is executed in c), a different quadruple jump can be included as a solo jump. For Senior and Junior Men and for Senior Ladies, when the triple Axel Paulsen is executed in a), it cannot be repeated again as a solo jump or in the jump combination. For Senior Ladies any triple jump is permitted. For Junior Ladies and Men only the prescribed double or triple jump is permitted. A single spread eagle, spiral or Free Skating movement cannot be considered as meeting the requirements of connecting steps and/or other comparable Free Skating movements and must be considered by the Judges in the Grade of Execution (GOE).

Jump combinations

c) For Senior Men the jump combination may consist of the same jump or another double, triple or quadruple jump. For Senior Men when a quadruple jump is executed in b), a different quadruple jump can be included in the jump combination. For Senior Ladies, Junior Men and Ladies the jump combination may consist of the same jump or another double or triple jump. However, for all categories the jumps included must be different than the solo jump.

<u>If the same jump is executed as a solo jump and as a part of the jump combination, the repeated jump will not be counted (if this repetition is in a jump combination, only the individual jump which is not according to the above requirements will not be counted).</u>

<u>If an extra jump(s) is executed, only the individual jump(s) which is not according to requirements will have no value. The jumps are considered in the order of execution.</u>

Spins

Spin in one position and spin combination: if there is no spin position before and/or after the change of foot with at least three (3) revolutions, the spin is not according to the requirements and no value will be given.

Except flying spins, spins cannot be commenced with a jump.

d) Flying spin:

Senior: Any type of flying spin is permitted with landing position different than in the Spin in one position.

<u>Junior: Only the prescribed type of flying spin is permitted.</u>

<u>Senior and Junior: A step over must be considered by the Judges in the Grade of Execution. A minimum of eight (8) revolutions in the landing position which may be different from the flying position. No previous rotation on the ice before the take-off is permitted. The required eight (8) revolutions can be executed in any</u>

variation of the landing position.

e) Spin in one position
Men - spin with only one change of foot:
Senior: The Competitor must choose the camel position or the sit position to be executed, but this position must be different from the landing position of the Flying spin. The spin must consist of only one change of foot, which may be executed in the form of a step over or a jump with not less than six (6) revolutions on each foot.
Junior: Only the prescribed sit or camel position is permitted to be executed. The spin must consist of only one change of foot, which may be executed in the form of a step over or a jump with not less than six (6) revolutions on each foot.

e) Ladies - layback or sideways leaning spin:
Any position is permitted, as long as the basic layback or sideways leaning position is maintained for eight (8) revolutions without rising to an upright position. After the required 8 revolutions it is possible to execute the Biellmann position. Change of foot is not allowed.

Ladies - Spin in one position without change of foot:
Any variation(s) of the chosen position can be executed. Minimum of eight (8) revolutions in this position.

For Men and Ladies: If the landing position of the Flying spin is the same that in the Spin in one position, the last performed of these two spins will not be counted, but will occupy a spin box.

f) Spin combination:
The spin combination must include only one change of foot with not less than six (6) revolutions on each foot. A change of foot may be executed in the form of a step over or a jump. The change of foot and the change of position may be made either at the same time or separately. See general requirements for a spin combination in Rule 610.

Step Sequences
Step sequences may include any unlisted jumps.

Rule 612
Free Skating Singles

1. Free Skating consists of a well balanced program of Free Skating elements, such as jumps, spins, steps and other linking movements executed with a minimum of two footed skating in harmony with music of the Competitor's

choice, vocal music with lyrics is permitted

Senior Well Balanced Program

A well balanced Free Skating program for **Men** must contain:

- maximum of 8 jump elements (one of which must be an Axel type jump);
- maximum of 3 spins, one of which must be a spin combination, one a flying spin or a spin with a flying entrance and one a spin with only one position;
- maximum of 1 step sequence;
- maximum of 1 choreographic sequence.

A well balanced Free Skating program for **Ladies** must contain:

- maximum of 7 jump elements (one of which must be an Axel type jump);
- maximum of 3 spins, one of which must be a spin combination, one a flying spin or a spin with a flying entrance and one a spin with only one position;
- maximum of 1 step sequence;
- maximum of 1 choreographic sequence.

Junior Well Balanced Program

A well balanced Free Skating program for **Men** must contain:

- maximum of 8 jump elements (one of which must be an Axel type jump);
- maximum of 3 spins, one of which must be a spin combination, one a flying spin or a spin with a flying entrance and one a spin with only one position;
- maximum of 1 step sequence.

A well balanced Free Skating program for **Ladies** must contain:

- maximum of 7 jump elements (one of which must be an Axel type jump);
- maximum of 3 spins, one of which must be a spin combination, one a flying spin or a spin with a flying entrance and one a spin with only one position;
- maximum of 1 step sequence.

<u>Starting with the season 2018-2019 there will be a maximum of 7 jump elements in the Senior and Junior Well Balanced program.</u>

2. General

The Competitor has complete freedom to select the Free Skating elements, the sum of which will comprise the program.

All elements are to be linked together by connecting steps of a different nature and by other comparable Free Skating movements while fully utilizing the entire ice surface (forward and backward crossovers are not considered to be connecting steps).

Any additional element or elements exceeding the prescribed numbers will not be counted in the results of a participant. Only the first attempt (or allowed number of attempts) of an element will be taken into account.

Remarks
For all singles Free Programs the following will apply:

Individual Jumps
Individual jumps can contain any number of revolutions.

Jump Combinations and Jump Sequences
A jump combination may consist of the same or another single, double, triple or quadruple jump. There may be up to three jump combinations or jump sequences in the Free Program. One jump combination could consist of up to three (3) jumps, the other two up to two (2) jumps.

Repetitions:
Any double jump (including double Axel) cannot be included more than twice in total in a Single's Free Program (as a Solo Jump or a part of Combination / Sequence). Of all the triple and quadruple jumps only two (2) can be executed twice. If at least one of these executions is in a jump combination or a jump sequence, both executions are evaluated in a regular way. If both executions are as solo jumps, the second of these solo jumps will receive 70% of its original Base Value. Triple and quadruple jumps with the same name will be considered as two different jumps. No triple or quadruple jump can be attempted more than twice.

Extra jumps and jump elements:
If an extra jump(s) is executed only the individual jump which is not according to the requirements will have no value. The jumps are considered in the order of execution.

Spins
All Spins must be of a different character. Any Spin with the same character (abbreviation) as the one executed before will be deleted (but will occupy a spinning box).
The spins must have a required minimum number of revolutions: six (6) for the flying spin and the spin with only one position and ten (10) for the spin combination, the lack of which must be reflected by Judges in their marking. These minimum number of required revolutions must be counted from the entry of the spin until its exit (except final wind-up in Spins in one position and Flying spins). In the spin combination and spin in one position the change of foot is optional.

Steps
The Competitors have complete freedom in selecting the kind of step sequence they intend to execute. Jumps can also be included in the step sequence. However the step sequence must fully utilize the ice surface. Step sequences too short and barely visible cannot be considered as meeting the requirements of a step sequence.

Choreographic Sequences
A Choreographic Sequence consists of any kind of movements like steps, turns, spirals, arabesques, spread eagles, Ina Bauers, hydroblading, any jumps with maximum of 2 revolutions, spins, etc. Listed elements included in the Choreographic Sequence will not be called and will not occupy a box. The pattern is not restricted, but the sequence must be clearly visible.
The Technical Panel identifies the Choreographic Sequence which commences with the first skating movement and is concluded with the preparation to the next element (if the Choreographic Sequence is not the last element of the program). It can be performed before or after the Step Sequence.
This element has a fixed base value and will be evaluated by the judges in GOE only.

C. Pair Skating

Rule 619
Requirements to elements of Pair Skating

General
Pair Skating is the skating of two persons in unison who perform their movements in such harmony with each other as to give the impression of genuine Pair Skating as compared with independent Single Skating; attention should be paid to the selection of an appropriate partner.

All elements are to be linked together by connecting steps of a different nature and by other comparable Free Skating movements, together with a variety of positions and holds, while fully utilizing the entire ice surface.

a) Both partners need not always perform the same movements; they may separate from time to time, but they must give an impression of unison and harmony of composition of program and of execution of the skating. Movements performed entirely on two feet must be kept to a minimum.
b) For the purpose of these Rules, a lift means a complete lift including full extension of the lifting arm/s, if required for the type of lift concerned. Small lifts, which may be either ascending and descending or rotational in character, in which the Man does not raise his hands higher than the shoulder level, as well as movements which may include the holding of

the Lady by the legs are also permitted.

c) Spinning movements in which the Man swings the Lady around in the air while holding her hand or foot, are illegal. Also illegal are the jumps of one of the partners towards the other partner, rotational movements with the grip of one of the partners on the leg, arm and neck of the other partner. Nevertheless, the so called death spiral in which the Lady circles around the Man, is permitted. One skate of the Lady must remain on the ice throughout the death spiral. Twist-like or rotational movements during which the Lady is turned over one or more times with her skating foot leaving the ice are not permitted. Multiple execution throughout a program of movements, where neither skate is on the ice must be penalized.

d) Harmonious steps and connecting movements, in time to the music, should be maintained throughout the program.

Lifts

Pair lifts are classified as follows:

Group One	-	Armpit Hold position
Group Two	-	Waist Hold position
Group Three	-	Hand to Hip or upper part of the leg (above the knee) position
Group Four	-	Hand to Hand position (Press Lift type)
Group Five	-	Hand to Hand position (Lasso Lift type)

The Lift's Group is determined by the hold at the moment the Lady passes the Man's shoulder. In Groups 3–5 full extension of the lifting arm(s) is mandatory.

A minimum of one (1) and maximum of three and a half (3 ½) revolutions of the Man.

Partners may give each other assistance only through hand-to-hand, hand-to-arm, hand-to-body and hand to upper part of the leg (above the knee) grips. A change of hold means going from one of these grips to another or from one hand to another in a one hand hold. Changes of hold during the lift are permitted.

Lady's positions are classified as follows: Upright (Lady's upper body vertical), Star (Lady's position sideways with upper body parallel to the ice) and Platter (Lady's position flat, facing up or down with upper body parallel to the ice). A change of position means going from one of these positions to another (one full revolution in each position).

The conclusion of the lift is when the Man's arm(s) begin to bend after full extension and consequently the Lady begins to descend. Level features (except related to take-off or landing) are counted from the moment the Man's arms are

fully extended until the conclusion of the Lift. Three and a half (3 ½) allowed revolutions of the Man are counted from the moment the Lady leaves the ice until the conclusion of the Lift.

Twist lifts
The Lady must be caught in the air at the waist by the Man prior to landing and be assisted to a smooth landing on the ice on a backward outside edge on one foot.

Throw jumps
Throw jumps are partner assisted jumps in which the Lady is thrown into the air by the Man on the take-off and lands without assistance from her partner on a backward outside edge.

Solo jumps, jump combinations and jump sequences
In case of unequal number of revolutions of the partners in a jump performed as a solo jump or part of a combination or a sequence, this jump will be called as a jump with lesser amount of revolutions executed by the partners.

Solo spin combinations
The Solo spin combination must have a minimum of two different basic positions with 2 revolutions in each of these positions by both partners anywhere within the spin. To receive full value, a Spin combination must include all three basic positions by both partners.
Solo spin combinations may be commenced with jumps.

Pair spin combinations
The Pair spin combination must have a minimum of two different basic positions with 2 revolutions in each of these positions by both partners anywhere within the spin. To receive full value, a Spin combination must include all three basic positions by both partners.
The pair spin combination must include at least one change of foot and position of both partners.
If there is no change of foot or no change of position by both partners, the element will have no value.

Death Spirals
In the final position while the Lady is performing the actual death spiral, both the Man and the Lady must execute a minimum of one (1) revolution with the knees of the Man clearly bent and in full pivot position. For a possible higher Level, the Man should stay in a low pivot position (this is when the lower part of his buttocks is not higher than the upper part of the knee of the pivot foot). The Lady simultaneously must skate on a clean edge with her body and head close to the ice surface, however she must not touch the ice with her head or assist herself with the free hand or any part of the body. The Lady's body weight is supported

by the force of the spiraling edge and the hold of the Man.
The Man must be in a centered position with a fully extended arm.
Any kind of position is counted as a feature if Skaters' hold lasts for at least one (1) revolution.

Step sequences
Should be executed together or close together. Step sequence must fully utilize the ice surface. Credit will be given to a pair which changes places and holds or uses difficult skating moves together during a step sequence. The workload between both partners must be even to be taken into account for a possible higher Level.

Rule 620
Short Programs Pairs

1. a) The Short Program for pairs (Senior and Junior) consists of seven (7) required elements. The sequence of the elements is optional;
   b) No extra marks are obtained by extending the program to the maximum time allowed if this is unnecessary. The music is chosen by each pair, vocal music with lyrics is permitted;
   c) If an unprescribed or additional element (performed) substitutes a required element (not performed), the respective box will be blocked and this performed element will be considered as not according to the requirements (no value).
   d) Unlisted or additional elements such as jumps, spins, steps or repetitions, even of elements which have failed, are not marked and consequently do not block a "box" (spot) of another type of elements.

2. The Senior Short Program shall consist of the following required elements, which form three groups. The groups that are effective on July 1st of each year are:

2016-2017
a) Any Lasso lift take-off (Group Five)
b) Twist lift (double or triple)
c) Throw jump (double or triple)
d) Solo jump (double or triple)
e) Solo spin combination with only one change of foot
f) Death spiral backward inside
g) Step sequence fully utilizing the ice surface

2017-2018

a) Any hip lift take-off (Group Three)
b) Twist lift (double or triple)
c) Throw jump (double or triple)
d) Solo jump (double or triple)
e) Pair spin combination with only one change of foot
f) Death spiral forward inside
g) Step sequence fully utilizing the ice surface

2018-2019

a) Any hand to hand lift take-off (Group Four)
b) Twist lift (double or triple)
c) Throw jump (double or triple)
d) Solo jump (double or triple)
e) Solo spin combination with only one change of foot
f) Death spiral backward outside
g) Step sequence fully utilizing the ice surface

3. The Junior Short Program shall consist of the following required elements, which form three groups. The groups that are effective on July 1st of each year are:

2016-2017

a) Any Lasso lift take-off (Group Five)
b) Twist lift (double or triple)
c) Double or triple toe loop or Flip/Lutz throw jump
d) Double loop or double Axel solo jump
e) Solo spin combination with only one change of foot
f) Death spiral backward inside
g) Step sequence fully utilizing the ice surface

2017-2018

a) Any hip lift take-off (Group Three)
b) Twist lift (double or triple)
c) Double or triple loop throw jump
d) Double Lutz solo jump
e) Pair spin combination with only one change of foot
f) Death spiral forward inside
g) Step sequence fully utilizing the ice surface

2018-2019

a) Any hand to hand lift take-off (Group Four)
b) Twist lift (double or triple)
c) Double or triple Salchow throw jump

d) Double Flip or double Axel solo jump
e) Solo spin combination with only one change of foot
f) Death spiral backward outside
g) Step sequence fully utilizing the ice surface

4. **Remarks**

Lifts

a) Only the prescribed overhead lift take-off is permitted.

Twist lifts

In the Short Program a twist lift take off is limited to either a Lutz or a Flip
b) take off by the Lady. The number of revolutions of the Lady rotating freely in the air is two (2) or three (3) for Seniors and Juniors.

Throw jumps

c) For Seniors, any double or triple throw jump is permitted. For Juniors only the prescribed throw jump is permitted.

Solo jumps

d) For Seniors, any double or triple jump is permitted. For Juniors only the prescribed jump is permitted.

Spins

Solo spin combination

e) The spin combination must include only one change of foot with not less than five (5) revolutions on each foot by both partners. The change of foot may be executed in the form of a step over or a jump. The change of foot and the change of positions may be made either at the same time or separately.

Pair spin combination

e) The pair spin combination must include only one change of foot with not less than eight (8) revolutions in total. The change of foot must be made at the same time by both partners. The change of position can be done at the same time or independently by the partners. The rotation must be continuous and no stop is permitted. The spin combination must not be commenced with a jump.

Death Spirals

f) Only the prescribed death spiral is permitted.

Death Spiral backward outside:
Both partners are skating on a backward outside edge. The Man performs a pivot and holds the hand of the Lady with the same arm as his skating foot

fully extended. The Lady is leaning backwards to the ice and her arm is fully extended as she circles around the Man in this position. Any variation of the Man's position, skating direction or edge is allowed as long as he keeps the pivot position as described and the Lady circles around him on an outside edge.

Death Spiral forward inside:
The Man is skating on a backward outside edge, and the Lady is skating on a forward inside edge. The Man performs a pivot and holds the hand of the Lady with the same arm fully extended as his skating foot. The Lady is leaning sideways to the ice and her arm is also fully extended as she circles around the Man in this position. Any variation of the Man's position, skating direction or edge is allowed as long as he keeps the pivot position as described and the Lady circles around him on an inside edge.

Death Spiral backward inside:
The Lady is leaning towards the ice and her arm is fully extended and she circles around the Man on a firm backward inside edge.

Death Spiral forward outside:
The same as for the death spiral forward inside, except that the Lady circles around the Man on a firm forward outside edge.

Step sequences

g) Step sequence should be executed together or close together and may include any unlisted jumps. Short stops in accordance with the music are permitted.

Rule 621
Free Skating Pairs

1. Free Skating for pairs consists of a well balanced program composed and skated to music of the pair's own choice for a specified period of time. Vocal music with lyrics is permitted. A good program contains moves of Single Skating executed simultaneously either symmetrically (mirror skating) or in parallel (shadow skating) and especially typical Pair Skating moves such as pair spins, spirals, lifts, partner assisted jumps and the like, linked harmoniously by steps and other movements.

2. **A Senior Well Balanced Program** must contain:

- maximum of 3 lifts, not all from Group 5, with full extension of the lifting arm/s;
- maximum of 1 twist lift;

- maximum of 2 different throw jumps;
- maximum of 1 solo jump;
- maximum of 1 jump combination or sequence;
- maximum of 1 solo spin combination;
- maximum of 1 pair spin combination;
- maximum of 1 death spiral different from the death spiral of the Short Program;
- maximum of 1 choreographic sequence.

3. **A Junior Well Balanced Program** must contain:

- maximum of 2 lifts, not all from Group 5 with full extension of the lifting arm/s;
- maximum of 1 twist lift;
- maximum of 2 different throw jumps;
- maximum of 1 solo jump;
- maximum of 1 jump combination or sequence;
- maximum of 1 solo spin combination;
- maximum of 1 pair spin combination;
- maximum of 1 death spiral;
- maximum of 1 choreographic sequence.

Any additional element or elements exceeding the prescribed numbers will not be counted in the result of a pair. Only the first attempt (or allowed number of attempts) of an element will be taken into account.

4. Starting with the season 2018-2019 there will be no choreographic sequence in Senior and Junior Well balanced Programs. Execution of choreographic elements will be rewarded in “Transitions”.

4. Remarks

For all pair programs, the following will apply:

Lifts

For Seniors if two (2) of Group 5 Lifts are executed, the take-offs have to be of different nature (abbreviation). If the take-off is not different, the second executed Group 5 lift will not be marked, but will block a Lift box.

Carry Lifts

a) One of the allowed Lifts with at least one continuous revolution of the Man may include a carry. Only one such lift can be executed. The next performed such a lift will have no value (but will block a Lift box if there is still any left);
b) Lifts that are just "Carries" consist of the simple carrying of a partner without rotation, only half a revolution of the Man is allowed on the take-off and/or

exit. All holds in “Carry” lifts are unrestricted. The carrying of one partner by the other on the back, shoulders or knees is allowed in these lifts. Carry lifts shall not be counted in the number of overhead lifts. These lifts will be considered in the component "Transition". They do not have a value and are not limited in number.

Twist lift
In Free Skating the number of revolutions in the twist lift is not limited. A Lutz, Flip, Toe loop or Axel take-off by the Lady is accepted.

Solo jumps, jump combinations and jump sequences
The jump combination may consist of two (2) or three (3) jumps.
All jumps executed with more than 2 revolutions (Double Axel and all triple and quadruple jumps) must be of different nature (different name), however the jump combination or sequence can include two same such jumps. <u>If an extra jump(s) is executed, only the individual jump(s) which is not according to the requirements will have no value. The jumps are considered in the order of execution.</u>

Spins
The spins must have a required minimum number of revolutions: ten (10) for solo spin combination and eight (8) for the pair spin combination, the lack of which must be reflected by Judges in their marking, however a spin with less than three (3) rotations is considered as a skating movement and not a spin. These minimum number of required revolutions must be counted from the entry of the spin until its exit.

In the **pair spin combination** there must be at least one change of foot of both partners, not necessarily executed by both partners at the same time.

In the **solo spin combination** the change of foot is optional.

Death Spiral
Variations of arm holds and pivot positions (backward or forward) are possible.
For Seniors the death spiral of Free Skating must be of a different type than the death spiral of the Short Program.

Choreographic Sequences
A Choreographic Sequence consists of any kind of movements like steps, turns spirals, arabesques, spread eagles, Ina Bauers, hydroblading, any jumps with maximum of 2 revolutions, spins, small lifts etc. Listed elements included in the Choreographic Sequence will not be called and will not occupy a box. The pattern is not restricted, but the sequence must be clearly visible.

The Technical Panel identifies the Choreographic Sequence which commences with the first skating movement and is concluded with the preparation to the next element (if the Choreographic Sequence is not the last element of the program). This element has a fixed base value and will be evaluated by the judges in GOE only.

III. TECHNICAL RULES
ICE DANCE

A. Ice Dance definitions

Rule 701
Axis

1. Long Axis – A straight line that divides the ice surface into two halves lengthwise (midline).
2. Short Axis – A straight line that divides the ice surface into two halves crosswise.
3. Continuous Axis – An imaginary line running around the ice surface that serves as the basis for the dance pattern. Usually, in Pattern Dances and Short Dance, the continuous axis consists of two lines running parallel to the long axis of the ice surface, approximately halfway between the long axis and the sides. These lines are joined at each end of the ice surface by a semi-circle. These semi-circles are flattened in some dances so that they run parallel to the ends of the ice surface. In circular dances, such as the Kilian, the continuous axis approximates a circle. The continuous axis of the Paso Doble is an oval.
4. Transverse Axis – An imaginary line intersecting the Continuous Axis of a dance at right angles.

Rule 702
Patterns

The pattern of any dance is the design of the dance on the ice. The diagram of a Pattern Dance includes all the information needed to execute one complete pattern (sequence) of the dance.

1. Set Pattern Dance – A Pattern Dance for which the location, direction and curvature of all edges to be skated are designated in the diagram. This diagram must be followed as closely as possible.
2. Optional Pattern Dance – A Pattern Dance for which the pattern may be altered by a Couple provided that the original step sequences, positions and timing are maintained. Each repetition of the altered pattern must be executed in the same manner and the restart must be commenced from the same place.

3. Lobe – Any sequence of steps on one side of the Continuous Axis that is approximately semi-circular in shape.

Rule 703
Series of steps

1. *Introductory Steps* – All Pattern Dances (does not apply to Pattern Dance Elements) may be started with optional introductory steps.
2. *Start of Pattern Dance* – The first step of the Pattern Dance after the Introductory Steps.
3. Sequence – The set order of the prescribed steps/turns that compose one pattern (sequence) of a Pattern Dance.
4. *Step Sequence* – A series of prescribed or un-prescribed steps, turns and movements in a Short (Rhythm) Dance or a Free Dance. Step Sequences are divided into Types, Groups and Styles.
   a) There are the following ***Types*** *of Step Sequences*, which may be skated either in hold or not- touching.
      i) *Step Sequences in Hold* must be skated in any Dance Holds or variation thereof (unless otherwise specified by the Ice Dance Technical Committee). Any separation to change a hold must not exceed one measure of music;
      ii) *Not Touching Step Sequences* must incorporate mirror and/or matching footwork. Both partners may cross each other's tracing(s) and may switch from matching footwork to mirror and vice versa, unless otherwise specified by the Ice Dance Technical Committee. The partners should remain as close together as possible, but they must not touch. The distance between the partners should generally not be more than two (2) arm length apart, except for short distances when the partners are performing edges and turns in opposite directions.
   b) *Types of Step Sequences* are divided into ***Groups***:
      i) *Group A: Straight Line Step Sequences*
         - *Midline* − skated along the full length of the ice surface on the Long Axis;
         - *Diagonal* − skated as fully corner to corner as possible.
      ii) *Group B: Curved Step Sequence*
         - *Circular* (may be skated in anticlockwise or clockwise direction) − utilizing the full width of the ice surface on the Short Axis;
         - *Serpentine* − commences in either direction (clockwise or anticlockwise) at the Long Axis at one end of the rink and progresses in three bold curves or in two bold curves (S-

Shaped) and ends at the Long Axis of the opposite end of the rink, the pattern utilizing the full width of the ice surface.

iii) *Group C: Partial Step Sequences*

- *Pattern Dance Type Step Sequence*– performed on the ice surface anywhere or as prescribed by the Ice Dance Technical Committee.
- *One Foot Step Sequence* – performed on one foot by each partner simultaneously, in Hold or separately

iv) Group D: *Combination Step Sequences* consisting of a One Foot Step Sequence and a Step Sequence of Group A or B

c) ***Style** of Step Sequences*
Characteristics of Levels of Step Sequences, organized as ***Styles***, are technical requirements with ongoing validity and are published in an ISU Communication

Any variation or combination of Groups, or other Groups of Step Sequences as decided upon by the Ice Dance Technical Committee are described and published in an ISU Communication.

5. *Section* – A part of a Sequence of a Pattern Dance.

6. *Pattern Dance Element* – A series of prescribed steps, turns and movements in a Short Dance, consisting of:
   a) a Sequence of a Pattern Dance listed in Rule 707 or
   b) a Section of a Pattern Dance listed in Rule 707 or
   c) a combination of steps/turns from Pattern Dances listed in Rule 707.

Rule 704
Steps, Turns and Movements

1. *Step* – The visible tracing on the ice that is executed on one foot. It may consist of an edge, change of edge, a turn on one foot such as a Three-Turn or Counter or a flat (which usually is not acceptable).
   a) *Edge* – The visible tracing of a skate on one foot that is on one curve;
   b) *Change of Edge* – The visible tracing of a skate on one foot that changes from one curve and edge to a different curve and edge;
   c) *Flat* – The visible double tracing of a skate on one foot that is straight.

2. *Open Stroke* – A step started close beside the skating foot without crossing in front or behind. It should be noted that on all forward edges the free leg is held behind before coming to the skating foot for the next step. On all backward edges the free leg is held forward before returning to the skating foot for the next step.

3. *Cross Stroke* – A step started with the feet crossed so that the impetus or power is gained from the outside edge of the foot that is becoming the free foot. (Note – the legs cross above the knees).

4. *Crossed Step In Front* – A step in which the free foot is placed on the ice on the outer edge side of the skating foot with the free leg tightly crossed in front of the skating leg (note – the legs cross below the knees).
5. *Crossed Step Behind* – A step in which the free foot is placed on the ice on the outer edge side of the skating foot with the free leg tightly crossed behind the skating leg (note – the legs cross below the knees).
6. *Chassé*
   a) *Simple Chassé* – A series of two edges (usually outside, inside) in which on the second edge the free foot is placed on the ice beside the skating foot, but not ahead of or behind it, and the free foot is lifted with the blade parallel to the ice;
   b) *Crossed Chassé* is the same as Simple Chassé except that on the second step the free foot crosses the skating foot (crossing behind if the Skater is skating forward, and crossing in front if the Skater is skating backward);
   c) *Slide Chassé* is the same as Simple Chassé except that on the second step the free foot slides off the ice in front of the skating foot when the Skater is skating forward and to the back if the Skater is skating backward (example: Man's Step 32 in the Starlight Waltz).
7. *Progressive (or Run or Crossover)* – A step or sequence of steps in which the free foot passes the skating foot before it is placed on the ice, thereby bringing the new free foot off the ice trailing the new skating foot.
8. *Roll* – A short or long, forward or backward edge.
   a) *Swing Roll* – A Roll held for several beats of music during which, when skating backward, the free leg lifts and then first swings forward, then backward past the skating foot, then back beside to skate the next step. When skating forward, the free leg first swings backward, then forward and then back beside to skate the next step. The swing of the leg gives the sense of a “rolling movement”;
   b) *Cross Roll* – A Roll started with the action of the free foot approaching the skating foot from the side so as to strike the ice almost at right-angles to the skating foot, started forward with the feet crossed in front or backward with the feet crossed behind. The impetus is gained from the outside edge of the skating foot as it becomes the new skating foot. In this case, the change of lean to the curve in the opposite direction creates a “rolling movement”.
9. *Slip Step* – A step skated in a straight line with the blades of both skates being held flat on the ice. The weight is over the skating leg that may be well bent or straight while the free foot slides forward on the ice to full extension.
10. *Toe Step* – A step where the Skater steps from one toe to the other without jumping.

11. *Turn*

a) *One Foot Turn* – A rotational movement on one foot in which the Skater moves from forward to backward or backward to forward.

i) *Three Turn* – A turn executed on one foot from an outside edge to an inside edge or an inside edge to an outside edge, with the exit curve continuing on the same lobe as the entry curve. The Skater turns in the direction of the curve;

ii) *American Waltz Type Three Turn (or Swing Three Turn)* – A Three Turn from an outside edge in which the free leg is extended and the toe and hip are well turned out and held over the tracing. The instep of the free foot is drawn close to the heel of the skating foot as the turn is made. After the turn onto an inside edge, the free foot is extended back of the tracing before being brought back beside the skating foot in time for the next step;

iii) *European Waltz Type Three Turn* – A Three Turn which begins as in ii). After the turn the back inside edge is held for one beat before the weight is transferred to the free foot as it becomes the skating foot;

iv) *Ravensburger Waltz Type Three Turn* – An inside Three Turn that begins as in i) and ii) with the free leg extended over the tracing and left behind during the turn, and swings through after its completion in front of the tracing before being brought back beside the skating foot in time for the next step. (example: Man's Step 1 in the Ravensburger Waltz);

v) *Touchdown Three Turn* – A Three Turn in which the weight is almost immediately transferred to the free foot as it becomes the skating foot for the next step. The turn is made from a forward outside three to the backward outside edge of the opposite foot without full weight transfer, then the Skater immediately steps forward onto the original foot (example: Steps 1 and 2 in the Austrian Waltz). Such a sequence may be skated with forward or backward, inside or outside Three Turns and may be skated alone or as a Couple side by side;

vi) *Walk-Around Three Turns* – Three Turns turned by a Couple at the same time around a common axis. The partners skate these turns in Waltz Hold (example: Step 29 to 31 in the Austrian Waltz, Steps 39 and 40 in the Ravensburger Waltz) or offset in partial Tango Hold (Steps 1 to 5 in the Golden Waltz);

vii) *Bracket* – A turn executed on one foot from an outside edge to an inside edge or an inside edge to an outside edge, with the exit curve continuing on the same lobe as the entry curve. The Skater turns in the direction opposite to the curve;

viii) *Rocker* – A turn executed on one foot from an outside edge to an outside edge or an inside edge to an inside edge, with the exit curve on a different lobe from the entry curve. The Skater turns in the direction of the entry curve;

ix) *Counter* – A turn executed on one foot from an outside edge to an outside edge or an inside edge to an inside edge, with the exit curve on a different lobe from the entry curve. The Skater turns in the direction opposite to the entry curve (i.e. in the direction of the exit curve);

x) *Swing Rocker or Counter* – A type of Rocker or Counter in which the free foot swings smoothly past close to the skating foot before the turn and after the turn is either moved past the skating foot and held behind over the tracing or allowed to swing forward.

b) *Two Foot Turn* – A rotational movement from one foot to the other foot in which the Skater moves forward to backward or backward to forward

i) *Mohawk* – A turn from one foot to the other in which the entry and exit curves are continuous and of equal depth. The change of foot is from an outside edge to an outside edge or from an inside edge to an inside edge.

- *Open Mohawk* – A Mohawk in which the heel of the free foot is placed on the ice at the inner side of the skating foot, the angle between the two feet being optional. Following the weight transfer, the immediate position of the new free foot is behind the heel of the new skating foot (examples: the Man's Steps 8 and 9 and the Lady's Steps 12 and 13 in the Fourteenstep);
- *Closed Mohawk* – A Mohawk in which the instep of the free foot is brought to the heel of the skating foot until the free foot is placed on the ice behind the heel of the skating foot. Following the weight transfer, the immediate position of the new free foot is in front of the new skating foot (examples: Steps 11 and 12 of the Rocker Foxtrot);
- *Swing Mohawk* – An Open or Closed Mohawk in which the free leg swings forward closely past the skating leg, and then back to the skating foot to execute the turn (examples: Steps 20 and 21 in the Tango).

ii) *Choctaw* – A turn from one foot to the other in which the curve of the exit edge is opposite to that of the entry edge. The change of foot is from outside edge to inside edge or inside edge to outside edge. Unless otherwise specified in the dance description, the free foot is placed on the ice close to the skating foot. The entry and exit edge are of equal depth.

- *Open Choctaw* – A Choctaw in which the free foot is placed on the ice at the inner side of the skating foot. Following the weight transfer the immediate position of the new free foot is behind the heel of the new skating foot;
- *Closed Choctaw* – A Choctaw in which the instep of the free foot is brought to the heel of the skating foot until the free foot is placed on the ice behind the heel of the skating foot. Following the weight transfer the immediate position of the new free foot is in front of the new skating foot (example: Steps 12 and 13 in the Blues);
- *Swing Choctaw* – An Open or Closed Choctaw in which the free leg swings forward closely past the skating leg and then back to the skating foot to execute the turn (example: Steps 5 and 6 [first part] of the Quickstep);
- *Crossed Open Choctaw* – A Choctaw in which the outside of the free foot is held in front of and at right angles to the skating foot. The hip is open after the turn. It may be wide-stepped (example: Steps 11 and 12 in the Rhumba).

c) *Twizzle* – A traveling turn on one foot with one or more rotations which is quickly rotated with a continuous (uninterrupted) action. The weight remains on the skating foot with the free foot in any position during the turn then placed beside the skating foot to skate the next step. A series of checked Three Turns is not acceptable as this does not constitute a continuous action. If the traveling action stops during the execution, the Twizzle, it becomes a Solo Spin (Pirouette).
The four (4) different types of *entry edges* for Twizzles are as follows:
   – Forward Inside;
   – Forward Outside;
   – Backward Inside;
   – Backward Outside.

d) *Twizzle Like Motion* – While the body performs one full continuous rotation, the skating foot technically executes less than a full turn followed by a step forward.

12. *Set of Twizzles*

a) *Set of Synchronized Twizzles* – A series of two Twizzles for each partner with up to 3 steps between Twizzles;

b) *Set of Sequential Twizzles* – A series of two Twizzles for each partner with up to 1 step between Twizzles.
For both a) and b), each Twizzle shall be at least one full rotation on one foot performed simultaneously (at the same time) by both partners, for example:

- side by side in the same direction (matching)
- or side by side in opposite directions (mirror)
  or following one another (one skating forward and/or backward and the other skating forward and/or backward).

Any variation or combinations of Twizzles as decided upon by the Ice Dance Technical Committee are published in an ISU Communication.

13. *Solo Spin (Pirouette)* – A spinning movement performed on one foot on the spot by one partner alone (with or without the assistance of the other partner) or by both partners simultaneously (around separate centers);

14. *Dance Spin*

    a) *Spin* – A spin skated by the Couple together in any hold. It should be performed on the spot around a common axis on one foot by each partner simultaneously;

    b) *Combination Spin* – A spin performed as above after which one change of foot is made by both partners simultaneously and further rotations occur;

    c) *Basic Positions in Dance Spins*

       i) *Upright Position* – Performed on one foot with skating leg straight or slightly bent and upper body upright (on a nearly vertical axis), arched back or bent to the side.

       ii) *Sit Position* – Performed on one foot with skating leg bent in a one-legged crouch position and free leg forward, to the side or back;

       iii) *Camel Position* – Performed on one foot with skating leg straight or slightly bent and body bent forward and free leg extended or bent upward on a horizontal line or higher.

    Any variation or combinations of Dance Spins as decided upon by the Ice Dance Technical Committee are published in an ISU Communication.

15. *Leg and Foot Positions*

    a) *Coupée* – The free foot is held up in contact with the skating leg from an open hip position so that the free foot is at a right angles to the leg of the skating foot;

    b) *Passé* – The free foot is brought up to the side of the skating leg from a closed hip position so that the free foot is parallel to the leg of the skating foot;

    c) *Attitude* – The free leg is bent, and brought up out and behind at a ninety degree angle to the leg of the skating foot.

16. *Dance Lift* – A movement in which one of the partners is elevated with active and/or passive assistance of the other partner to any permitted height, sustained there and set down on the ice. Any rotations and positions and

changes of such positions during the lift are permitted. Lifts should enhance the music chosen and express its character and should be performed in an elegant manner without obvious feats of strength and awkward and/or undignified actions and poses. Types of Dance Lifts are classified as follows:

Short Lifts – the duration of the lift should not exceed seven (7) seconds

a) *Stationary Lift* – A lift that is executed on the spot (stationary location) by the lifting partner who may or may not be rotating;

b) *Straight Line Lift* – A lift in which the lifting partner travels in a straight line in any position on one foot or two feet;

c) *Curve Lift* – A lift in which the lifting partner travels on one curve (lobe) in any position on one foot or two feet;

d) *Rotational Lift* – A lift in which the lifting partner rotates in one (clockwise or anticlockwise) direction while travelling across the ice.

Combination Lifts – the duration of the lift should not exceed twelve (12) seconds. A lift combining:

e) *two Rotational Lifts (as per paragraph d) above):* in different directions;

f) *two Curve Lifts:* on two different curves forming a serpentine pattern;

g) *two different Types of Short Lifts a), b), c) or d) above.*

Illegal Lift Movement/Pose – The following movements and/or poses during the lift are illegal:

a) lying or sitting on the partner's head;
b) standing on the partner's shoulder or back;
c) lifted partner in upside down split pose (with sustained angle between thighs more than 45 degrees);
d) lifting partner swinging the lifted partner around;
   i) by holding the skate(s)/boot(s) or leg(s) only with fully extended arm(s) or without the assistance of hand(s)/arm(s) or;
   ii) by holding the hand(s) with full arm extension by both partners.
e) point of contact of the lifting hand(s)/arm(s) of the lifting partner with any part of the body of the lifted partner is sustained higher than the lifting partner's head;
f) hand/arm which is used as an additional support or balancing only or which touches any part of the body of the lifted partner is sustained by the lifting partner higher than his head for more than 2 seconds.

A brief movement through poses a) to e) will be permitted if it is not established (sustained) or if it is used only to change pose.

Any variation or combinations of Dance Lifts as decided upon by the Ice Dance Technical Committee are published in an ISU Communication.

17. *Jumps*

    a) *Jump* – A jump of not more than one (1) revolution, which may be executed by only one (1) partner at a time. This jump may be performed either in hold or separated;

    b) *Dance Jump* – A small jump not more than ½ a revolution, used to change foot or direction. Such jumps may be performed either in hold or separated. Both partners may jump at the same time;

    c) *Hop* – A small jump without revolution.

18. *Types of Movements*

    a) *Crouch* – A two-footed movement in which a Skater travels along the ice with both legs bent at an angle;

    b) *Ina Bauer* – A two-footed movement in which the Skater travels along the ice with one foot on a forward edge/tracing and the other on a matching backward edge/tracing on a different but parallel tracing;

    c) *Lunge* – A movement in which a Skater travels along the ice with one leg bent and the other leg directed behind with the boot/blade touching the ice;

    d) *Pivot* – A two footed movement in which the toe picks of one foot are inserted into the ice by a Skater as a central pivoting point while the other foot travels in a circular pattern around the pivot point;

    e) *Shoot the Duck* – A one foot movement in which a Skater travels along the ice with one leg in a strongly bent position and the other leg directed forward parallel to the ice;

    f) *Spread Eagle* – A two-footed movement in which a Skater travels along the ice with one foot on a forward edge/tracing and the other on a matching backward edge/tracing on the same tracing.

19. *Choreographic Element* – Listed or unlisted movement or series of movement(s) as specified by the Ice Dance Technical Committee.

Rule 705
Dance Holds

1. *Hand-in-Hand Hold*

    a) Facing in same direction – The partners face in the same direction and are skating side by side or one behind the other with their arms extended

and their hands clasped. A variation of this is the arm-in-arm side by side hold;

b) Facing in opposite directions – The partners usually face each other while one skates backward and the other skates forward with the arms extended to the side but sometimes the hold can be skated back to back (example: Steps 22 to 25 in the Cha Cha Congelado).

2. *Closed or Waltz Hold* – The partners are directly opposite each other. One partner faces forward while the other partner faces backward. The Man's right hand is placed firmly on his partner's back at the shoulder blade with the elbow raised and the arm bent sufficiently to hold the Lady close to him. The left hand of the Lady is placed at/on the shoulder of the Man so that her arm rests comfortably, elbow to elbow, on his upper arm. The left arm of the Man and the right arm of the Lady are extended comfortably at shoulder height. Their shoulders remain parallel.

3. a) *Open or Foxtrot Hold* – The hand and arm holds are similar to those of the Closed or Waltz Hold. The partners simply turn slightly away from each other so that they both face in the same direction;

   b) *Crossed Foxtrot Hold* – The partners are in the same hold as above except that the Man's right arm passes behind the Lady and his right hand is on her right hip, and the Lady's left arm passes behind the Man and her left hand is on his left hip.

4. *Outside or Tango Hold* – The partners face in opposite directions – one partner skating forward; the other partner backward. However, unlike the Closed Hold, the partners are offset with the Man to the right or left of the Lady so that the front of his hip is in line with the front of her corresponding hip. Tight hip-to-hip position is undesirable since it impedes flow.

5. a) *Kilian Hold* – The partners face in the same direction with the Lady to the right of the Man and his right shoulder behind her left. The left arm of the Lady is extended across the front of the Man's body to hold his left hand. His right arm crosses behind the Lady's back to clasp her right hand. Both right hands rest over her hip bone;

   b) *Reversed Kilian Hold* – This hold is similar to the Kilian Hold but with the Lady at the Man's left;

   c) *Open Kilian Hold* – The Man's left hand holds the Lady's left hand, with his right hand resting over the Lady's left hip or behind her back. The Lady's right arm is extended. This hold may also be reversed;

   d) *Crossed Kilian Hold* – The Lady's left arm is extended across the front of the Man's body to his left hand, while his right arm is extended across in front of her body with both partners' right hands resting clasped over her hip. This hold may also be reversed;

e) *High Kilian Hold* – A Kilian Hold in which one pair of the joined hands are elevated to slightly above shoulder height with the elbows slightly bent (example: Steps 3 to 12 in the Yankee Polka).

6. *Leading Hand* – The leading hand of the Man is the right hand except in the case of "Reversed" hold when it is the left hand.
7. *Promenade* – A type of "progressive" skated in Open Hold by a Couple on the same (example: Steps 9 to 11 in the Blues) or opposite (example: Steps 16 to 19 in the Tango) feet derived from a similar forward walking movement in some ballroom dances.

Note: photographs of all Dance Holds listed above are found in the ISU Handbook Ice Dance 2003. In certain cases, some Dance Holds cannot be defined by standardized descriptions.

Rule 706
Musical definitions

1. *Beat* – A note defining the regular recurring divisions of a piece of music.
2. *Tempo* – The speed of music in Beats or Measures per minute.
3. *Rhythm* – The regularly repeated pattern of accented and unaccented Beats which gives the music its character.
4. *Measure (Bar)* – A unit of music which is defined by the periodic recurrence of the accent. Such units are of equal number of Beats.
5. *Strong Beat* – The first Beat of the Measure or group of two Measures supporting the skating count of the Rhythm.
6. *Weak beat* – For Rhythms with a skating count on two Measures, the first Beat of the second Measure (examples: skating count 3 of the Quickstep; skating count 4 of the American Waltz). The skating count of each Rhythm is explained in the ISU Ice Dance Rhythms Booklet & Compact Disc.

B. Pattern Dances

Rule 707
Introduction

1. Pattern Dances involve the skating of prescribed Patterns to music with a defined Rhythm and Tempo.
2. In an International Competition including a Pattern Dance(s) Segment, the Pattern Dances to be skated will be selected from the following:

1. Fourteenstep	14. Quickstep
2. Foxtrot	15. Finnstep
3. Rocker Foxtrot	16. Paso Doble
4. European Waltz	17. Rhumba
5. American Waltz	18. Cha Cha Congelado
6. Westminster Waltz	19. Silver Samba
7. Viennese Waltz	20. Tango
8. Austrian Waltz	21. Argentine Tango
9. Starlight Waltz	22. Tango Romantica
10. Ravensburger Waltz	23. Blues
11. Golden Waltz	24. Midnight Blues
12. Kilian	
13. Yankee Polka	

The descriptions, charts and diagrams of the Sequences of the above Pattern Dances are included in the ISU Handbook Ice Dance 2003. The Man must skate the Man's Steps and the Lady must skate the Lady's Steps.

3. The Pattern Dances must be skated in the order listed in paragraph 2 above. Each Pattern Dance must be skated by each Couple alone on the ice surface as follows, unless otherwise directed by the Ice Dance Technical Committee in an ISU Communication:

   a) For two (2) Sequences of the dance:

European Waltz	Austrian Waltz	Silver Samba
American Waltz	Golden Waltz	Argentine Tango
Starlight Waltz	Yankee Polka	Tango
Ravensburger Waltz	Finnstep	Tango Romantica
Westminster Waltz	Cha Cha Congelado	Midnight Blues

   b) For three (3) Sequences of the dance:

Viennese Waltz	Blues
Paso Doble	

c) For four (4) Sequences of the dance:
Fourteenstep Quickstep
Foxtrot Rhumba
Rocker Foxtrot

d) For six (6) Sequences of the dance:
Kilian

4. The Referee may announce the approximate location at which the Pattern Dances must be started. All Pattern Dances shall be started so that the steps of the first side of the pattern are skated in front of the Judges unless otherwise specified by the Referee or directed by the Ice Dance Technical Committee in an ISU Communication. If the Referee changes the side to start, the change must be announced at the time of the first draw for starting order.

5. In International Competitions, the current series of ISU Ice Dance music shall be used for the Pattern Dance unless the Ice Dance Technical Committee has decided that the music for one or several Pattern Dances is to be provided by the Couple, following certain requirements, as announced in an ISU Communication. In this case, Pattern Dance music that does not adhere to these specifications will be penalized by deduction(s) (see Rule 353, paragraph 1. n).

   When ISU Ice Dance music is used, five (5) pieces of music will be played, unless otherwise directed in an ISU Communication, for each Pattern Dance from ISU tunes 1 to 5. For each starting group the music will be played in the above mentioned numerical order. The last (sixth) tune of each dance shall be only used during the warm-up of each starting group.

6. An interrupted Pattern Dance shall be resumed at the nearest technically practicable point in the step sequence and which must be after the point of interruption. The Couple may not skate the steps missed by the interruption.

Rule 708
Requirements and marking

1. **General requirements for Pattern Dances**

   During the skating of the Pattern Dances, the following must be observed:

   a) *Accuracy* – The steps, edges, elements/movements and dance holds must be in accordance with the dance description and the Rules. Subject to general conformity with the basic requirements, some latitude is given to allow a Couple to demonstrate their own individual style. This is usually accomplished by the use of a variety of arm and/or leg movements. Movements or positions of arms and/or hands, which differ from those specified in the descriptions of the required dance

holds are permitted, provided that the Leading Hand of the Man remains in the prescribed position for the hold;

b) *Placement* – The pattern of the dances must be in accordance with the Rules. Maximum utilization of the ice surface is desirable, which requires deep edges and good flow. Ice coverage must not be obtained by the use of flat or shallow edges. In a regulation-sized rink (Rule 342), the Couples may not cross the Long Axis. In rinks less than regulation-size, the Couple may cross the Long Axis proportionally to the width of the rink;

c) *Skating Skills* – Good basic skating quality is required:
Deep edges should be skated with speed, flow and easy glide in an effortless manner. Cleanness and sureness of steps, edges and lobe transitions should be evident. The Skater must carry the weight over the skating foot. Footwork must be neat and precise. Two-footed skating must be avoided except where it is required. Good and equal technical ability are required for both partners. The knee of the skating leg should be flexible with a rhythmic rise and fall. On Chassés and Progressives the feet should be lifted a small distance from the ice;

d) *Timing* – The dances must be skated in strict time to the music with the start of the first step of the dance on beat 1 of the 9th measure of the particular tune (unless otherwise specified in the description of the Pattern Dance or by the Ice Dance Technical Committee and announced in an ISU Communication). The prescribed number of beats employed for each step/movement must be in accordance with the Rules. All movements must be coordinated with the rhythm of the music so that all steps are completed without any break in continuity;

e) *Style* – Carriage should be upright but not stiff with the head held up. All actions should be easy and flowing and performed in an elegant manner. The Dance Holds (see Rule 705), should be firm and the fingers neither spread nor clenched. There should be no apparent struggle for speed and speed should not be obtained at the expense of good style. The free leg should be extended; the foot turned out and pointed down;

f) *Unison* – The Couple should skate as close together as possible keeping a constant distance between them. All movements such as leg swings, knee bends and lean should be equal and well coordinated and their performance should be balanced. The partners should move as one. The Man should show his ability to lead and the Lady to follow;

g) *Interpretation* – The dance must be skated smoothly and rhythmically with the character of the music being correctly interpreted. Such interpretation shall be shown by variations in the execution of the dance movements, which reflect the rhythm patterns in the music. The

overall effect should be such that each Pattern Dance has a distinct flavor. The partners should relate to one another.

2. **Required Sections of Pattern Dances**

The pattern of each Pattern Dance may be divided into a certain number of Sections published and updated in ISU Communication. The number of Sections of the particular dance depends on its length (number of steps) and number of Sequences in the dance.

3. **Marking Pattern Dances**

a) **Technical Score**

i) Scale of Values
A table with the Scale of Values of the Sections of the Pattern Dances is published and updated in ISU Communications. This Scale of Values (SOV) contains Base Values of all the Sections of each Pattern Dance and adjustments for the correctness and quality of their execution;

ii) Levels of Sections
For Advanced Novice Competitions and for competitions having specified such procedure in their Announcement, Technical Specialists will determine the Level of every Section in the Pattern Dance (if a description of Levels of Sections and corresponding Scale of Value are available for that Pattern Dance in an ISU Communication);

The description of characteristics that give a Section a certain Level is published and updated in ISU Communications.

iii) Grade of Execution (GOE)
Every Judge will mark the quality of execution of every Section of the Pattern Dance depending on the positive features of the execution and errors on the seven grades of execution scale: +3, +2, +1, Base Value, -1, -2, -3. Each + or - grade has its own + or - numerical value indicated in the SOV Table. This value is added to the Base Value of the Section or deducted from it;

The guidelines for marking of Sections are published and updated in ISU Communications.

b) **Components Score**

i) **Component definitions**

In addition to the Technical Score each of the Judges will evaluate the Couple's whole performance which is divided into four (4) Components in the Pattern Dances (Skating Skills, Performance, Interpretation, Timing);

SKATING SKILLS

Definition:
The method used by the Couple to perform dance steps and movements over the ice surface and the efficiency of their movement in relation to speed, flow and ice coverage;

Criteria:

- Overall skating quality
- Flow and glide
- Speed and power
- Balance of technique and skating ability of partners
- Ice coverage

PERFORMANCE

Definition:
The ability of the partners to demonstrate unison, body alignment, carriage, style and balance of performance while executing Pattern Dances in order to exhibit a pleasing appearance through coordinated movement, body awareness and projection;

Criteria:

- Unison and body alignment
- Distance between partners
- Carriage and style
- Balance in performance between partners

INTERPRETATION

Definition:
The ability of the Couple to express the mood, emotions, and character of the Pattern Dance rhythm by using the body moves, steps and holds of the dance to reflect the structure and character of the music;

Criteria:

- Expression of the character of the rhythm
- Relationship between partners reflecting the nature of the dance

TIMING

Definition:
The ability of the Couple to skate strictly in time with the music and to reflect the rhythm patterns of a Pattern Dance correctly;

Criteria:

- Skating in time with the music
- Skating on the strong beat
- Start of the first Step

ii) **Marking of Components**

Components are evaluated by Judges after the completion of the dance on a scale from 0.25 to 10 with increments of 0.25. Points given by the Judges correspond to the following degrees of the Components: <1- extremely poor, 1 very poor, 2 - poor, 3 -weak, 4 - fair, 5 - average, 6 - above average, 7 - good, 8 - very good, 9 to 10 - outstanding. Increments are used for evaluation of performances containing some features of one degree and some of the next degree.
Guidelines for judging are published and updated in ISU Communications;

c) **Deductions**

Deductions are applied for certain violations according to Rule 353.

C. Short Dance

Rule 709

1. **General Requirements for the Short Dance**

   a) Short Dance is a dance created by an Ice Dance Couple to dance music with designated rhythm(s) and/or theme(s) selected by the Ice Dance Technical Committee annually for the season. The dance must:
      i) reflect the character of the selected dance rhythm(s) or theme(s);
      ii) be translated to the ice by demonstrating technical skill with steps and movements along with flow and the use of edges;
      iii) fit to the phrasing of the music.

      Couples must skate primarily to the rhythmic beat. The dance will contain elements selected by the Ice Dance Technical Committee from the list of required elements specified in paragraph 2 below. Elements should be integrated into the composition of the dance so the concept and choreography must produce the feeling of a unified dance. The rhythm (or group of rhythms) and/or theme(s) as well as the guidelines and technical requirements for the Junior and Senior programs, including specified elements will be decided annually by the Ice Dance Technical Committee and published in an ISU Communication;

   b) The duration of the Short Dance is indicated in Rule 502, paragraph 3;

   c) The music for the Short Dance, including music for the specified Pattern Dance (if required) is to be provided by the Couple. <u>The music may be vocal and must be suitable for Ice Dance as a sport discipline.</u> The music must have the following characteristics:
      i) Only dance music with an audible rhythmic beat may be used. The music may be without an audible rhythmic beat for up to ten (10) seconds at the beginning of the program;
      ii) The music must be selected in accordance with the designated rhythm(s) and/or theme(s);
      iii) The music must be selected in accordance with the specified tempo, when applicable.

      Short Dance music that does not adhere to these specifications will be penalized by deduction(s) (see Rule 353, paragraph 1. n)).The Couple is required to submit the name/title of the selected music and the rhythm(s)/theme(s) of their program when registering their music for the information of the Referee and Judges;

d) The pattern must proceed in a generally constant direction and must not cross the Long Axis of the ice surface except once at each end of the rink (within no more than twenty (20) meters of the barrier). Loops in either direction are permitted provided that they do not cross the Long Axis (unless specified by the Ice Dance Technical Committee and announced in an ISU Communication);

e) All dance steps, turns, rotations and changes of position are permitted provided that they are appropriate to the designated rhythm(s) and the music chosen. Repetition of any steps, turns and movements is permitted. Difficult, original, varied and intricate footwork is required for both partners;

f) There are no restrictions on Dance Holds (or variation thereof). Skating in Hand-in-Hand Hold with fully extended arms is permitted only if in the character of the rhythm chosen, but must not be used excessively;

g) Partners must not separate except to change hold or to perform Required Elements requiring a separation, Turns as transitional elements and moves during the permitted stops. The distance between partners during such separations should not exceed two arm lengths. Change of hold and Turns as transitional elements must not exceed the duration of one measure of music. Separations at the beginning and/or end of the program may be up to ten (10) seconds in duration without restrictions on the distance of the separation;

h) After the clock is started with the first movement, the Couple must not remain in one place for more than ten (10) seconds. During the program up to two (2) full stops in addition to stops required in Required Elements are permitted (duration must not exceed five (5) seconds each) unless otherwise specified in an ISU Communication;

i) The program must be developed through skating skill and quality rather than through non-skating actions such as sliding on one knee, or use of toe steps which should be used only to reflect the character of the dance and underlining rhythm and nuances of the chosen music. In the interest of the public in the arena, programs should be choreographed to all sides of the arena and not only focused to Judges' side;

j) Touching the ice with the hand(s) is not permitted. <u>Unless otherwise allowed by the IDTC and announced in a Communication.</u>

k) Kneeling or sliding on two knees, or sitting on the ice is not allowed and it will be considered by the Technical Panel as a Fall.

2. **Required Elements**

The list of Required Elements to be included into composition of the Short Dance and specific requirements for these elements will be announced in an ISU Communication annually.

The following are options that may be included as Required Elements:

- Dance Lift(s) – see Rule 704, paragraph 16;
- Dance Spin(s) – see Rule 704, paragraph 14 e;
- Set(s) of Twizzles – see Rule 704, paragraph 12;
- Step Sequence(s) – see Rule 703, paragraph 4;
- Pattern Dances Element(s) – see Rule 703, paragraph 6 (Pattern Dance Element as per Rule 703, paragraph 6. a) or 6. b) included in the Junior Short Dance as set Required Elements);
- Choreographic Element (not more than one) – see Rule 704, paragraph 19.

3. **Illegal Elements/Movements**

The following elements and movements are illegal in the Short Dance unless otherwise stated in an ISU Communication:

- Illegal Lift Movement/Pose – see Rule 704, paragraph 16;
- Jumps (or throw jumps) of more than one (1) revolution or jumps of one (1) revolution skated at the same time by both partners;
- Lying on the ice.

D. Free Dance

Rule 710

1. **General Requirements for the Free Dance**

a) Free Dance is the skating by the Couple of a creative dance program blending dance steps and movements expressing the character/rhythms(s) of the dance music chosen by the Couple;

The Free Dance must contain combinations of new or known dance steps and movements including Required Elements composed into a well balanced, whole unit displaying excellent skating technique and the personal creativity of the Couple in concept, arrangement, and expression. The program, including Required Elements, must be skated in time and phase with the music. The Couple should skate primarily in time to the rhythmic beat, and not to the melody alone. The choreography should clearly reflect the dance character, accents and nuances of the

chosen dance music, demonstrating a close relationship between partners with obvious, distinct changes of mood and pace with variations in speed and tempo. The program must utilize the whole ice surface. The Free Dance must not have the concept of a Pair or show program;

b) The duration of the Free Dance is indicated in Rule 502, paragraph 4;

c) The music for Free Dance may be vocal and must be suitable for Ice Dance as a sport discipline and must have the following characteristics:
   i) The music must have an audible rhythmic beat and melody, or audible rhythmic beat alone, but not melody alone, and may be vocal. The music may be without an audible rhythmic beat for up to ten (10) seconds at the beginning or end of the program and up to ten (10) seconds during the program.
   ii) The music must have at least one change of tempo/rhythm and expression. These changes may be gradual or immediate, but in either case they must be obvious.
   iii) All music including classical music must be cut/edited, orchestrated or arranged in a way that it creates an interesting, colorful, entertaining dance program with different dance moods or a building effect.
   iv) The music must be suitable for the Couple's skating skills and technical ability.

   Free Dance music that does not adhere to these requirements will be penalized by a deduction (see Rule 353, paragraph 1.n).

d) All steps and turns are permitted. Deep edges and intricate footwork displaying skating skill, difficulty, variety and originality that constitute the distinct technical content of the dance must be included in the program and performed by both partners. In the interest of the public in the arena, programs should be choreographed to all sides of the arena and not only focused to Judges' side;

e) All elements and movements are permitted provided that they are appropriate to the character of the music and to the concept of a Well Balanced Program and are in accordance with the definitions in Rule 704;

f) The number of separations to execute transitional footwork or moves is not restricted. The distance between partners should not exceed two arms lengths. The duration of each such separation, outside of Required Elements requiring a separation, must not exceed five (5) seconds. Separations at the beginning and/or end of the program may be up to ten (10) seconds in duration without restrictions on the distance of separation, unless otherwise specified in an ISU Communication;

g) All changes of hold are permitted. Many and varied holds increase the difficulty of the program and therefore, should be included. Skating face

to face is considered to be more difficult than skating side by side, hand in hand, separately or one after the other;

h) After the clock is started with the first movement, the Couple must not remain in one place for more than ten (10) seconds. During the program full stops (up to five (5) seconds) in addition to stops required in Required Elements, in which the Couple remains stationary on the ice while performing body movements, twisting, posing and the like are permitted, unless otherwise specified in an ISU Communication;

i) The program must be developed through skating quality rather than through non-skating actions such as sliding on one knee, or use of toe steps which should be used only to reflect the character of the dance and underlining rhythm and nuances of the chosen music;

j) Touching the ice with the hand(s) is not permitted;

k) Kneeling or sliding on two knees, or sitting on the ice is not allowed and it will be considered by the Technical Panel as a Fall.

2. Well Balanced Free Dance Programs

The list of Required Elements to be included in a Well Balanced Program for Novice, Junior and Senior Free Dances and the specific requirements for those elements will be announced in an ISU Communication annually.
The following are options that may be included as Required Elements:

- Dance Lift(s) – see Rule 704 paragraph 16;
- Dance Spin(s) – see Rule 704 paragraph 14;
- Step Sequence(s) – see Rule 703 paragraph 4 (Groups A and B);
- Set(s) of Synchronized Twizzles– see Rule 704 paragraph 12.a);
- Choreographic Element(s) – see Rule 704, paragraph 19.

3. Illegal Elements/Movements

The following elements and movements are illegal in the Free Dance unless otherwise stated in an ISU Communication:

- Illegal Lift Movement/Pose – see Rule 704, paragraph 16;
- Jumps (or throw jumps) of more than one (1) revolution or jumps of one (1) revolution skated at the same time by both partners;
- Lying on the ice.

E. Announcement and draw of Pattern Dances and announcement of requirements for Short Dance and Free Dance

Rule 711

1. For Novice International Competitions, the lists of Pattern Dances will be announced annually by the Ice Dance Technical Committee in an ISU Communication not later than June 1st, to become effective on July 1st of the year following the announcement. For other International Competitions which include a Pattern Dance(s) Segment, the Pattern Dance(s) to be skated may be decided by the Organizers and included in the Announcement. If a draw is required, the Pattern Dance(s) to be skated shall be drawn on site and announced prior to the first official practice. The draw shall be carried out by the Referee in the presence of, if possible, one participating Couple.
2. a) The specific requirements for the Short Dance and Free Dance will be decided annually by the Ice Dance Technical Committee and announced in an ISU Communication;

   b) The specific requirements announced for the Short Dance and Free Dance must be used at all ISU Championships and International Competitions during the year, from July 1st to June 30th, for which they are announced.
3. All Communications concerning technical requirements must be published before June 1st except for pending decisions as a result of a Congress, clarifications and additional examples which may be published as needed.

Rules 712 – 799 (reserved)

INTERNATIONAL SKATING UNION

Founded: July 23rd, 1892, at Scheveningen (Netherlands)

ISU MEMBERS

AND	**Andorra**	Federacio Andorrana d'Esports de Gel (Figure)
ARG	**Argentina**	Argentine Ice Speed Skaters Union (UVEPA) (Speed) Federacion Argentina de Patinaje Sobre Hielo (Figure)
ARM	**Armenia**	Figure Skating Federation of Armenia (Figure)
AUS	**Australia**	Australian Ice Racing Inc. (Speed) Ice Skating Australia Incorporated (Figure)
AUT	**Austria**	Österreichischer Eisschnelllauf Verband (Speed) Österreichischer Eiskunstlauf Verband (Figure)
AZE	**Azerbaijan**	The Skating Federation of Azerbaijan Republic (Figure)
BLR	**Belarus**	Skating Union of Belarus
BEL	**Belgium**	Fédération Royale Belge de Patinage de Vitesse (Speed) Fédération Royale Belge de Patinage Artistique (Figure)
BIH	**Bosnia and Herzegovina**	Skating Federation of Bosnia and Herzegovina
BRA	**Brazil**	Brazilian Ice Sports Federation (Figure)
BUL	**Bulgaria**	Bulgarian Skating Federation
CAN	**Canada**	Speed Skating Canada (Speed) Skate Canada (Figure)
CHN	**China**	Chinese Skating Association
TPE	**Chinese Taipei**	Chinese Taipei Skating Union
COL	**Colombia**	Federacion Colombiana de Patnaje (Provisional Member Speed)
CRO	**Croatia**	Croatian Skating Federation
CYP	**Cyprus**	Cyprus Skating Federation (Figure)
CZE	**Czech Republic**	Czech Speed Skating Federation (Speed) Czech Figure Skating Association (Figure)
DEN	**Denmark**	Dansk Skøjte Union
PRK	**D.P.R. Korea**	Skating Association of the Democratic People's Republic of Korea
EST	**Estonia**	The Estonian Skating Union
FIN	**Finland**	Suomen Luisteluliitto (Speed) Suomen Taitoluisteluliitto (Figure)
FRA	**France**	Fédération Française des Sports de Glace
GEO	**Georgia**	Georgian Figure Skating Federation (Figure)

GER	**Germany**	Deutsche Eisschnelllauf-Gemeinschaft (Speed) Deutsche Eislauf-Union e.V. (Figure)
GBR	**Great Britain**	National Ice Skating Association of UK Ltd.
GRE	**Greece**	Hellenic Winter Sports Federation (Provisional Member Figure)
HKG	**Hong Kong/ China**	Hong Kong Skating Union Ltd
HUN	**Hungary**	Hungarian National Skating Federation
ISL	**Iceland**	Icelandic Skating Association (Figure)
IND	**India**	Ice Skating Association of India
INA	**Indonesia**	Persatuan Olahraga Sepatu Roda Seluruh Indonesia (PORSEROSI) (Provisional Member for Figure and Speed)
IRL	**Ireland**	Ice Skating Association of Ireland (Figure) (Provisional Member Speed)
ISR	**Israel**	Israel Ice Skating Federation
ITA	**Italy**	Federazione Italiana Sport del Ghiaccio
JPN	**Japan**	Japan Skating Federation
KAZ	**Kazakhstan**	National Skating Federation of the Republic of Kazakhstan
KGZ	**Kyrgyz Republic**	Skating Federation of the Kyrgyz Republic (Provisional Member Figure)
LAT	**Latvia**	Latvian Skating Association
LIE	**Lichtenstein**	Liechtensteiner Eislauf Verband (Provisional Member Figure)
LTU	**Lithuania**	Lithuanian Speed Skating Association (Speed) Lithuanian Skating Federation (Figure)
LUX	**Luxembourg**	Union Luxembourgeoise de Patinage de Vitesse (Speed) Union Luxembourgeoise de Patinage (Figure)
MAS	**Malaysia**	Ice Skating Association of Malaysia
MEX	**Mexico**	Federacion Mexicana de Patinaje Sobre Hielo y Deportes de Invierno, A. C. (Figure)
MDA	**Moldova**	Figure Skating Federation of the Republic of Moldova (Provisional Member Figure)
MON	**Monaco**	Fédération Monegasque de Patinage (Figure)
MGL	**Mongolia**	Skating Union of Mongolia
MAR	**Morocco**	Association of Moroccan Ice Sports (Figure)
NED	**Netherlands**	Koninklijke Nederlandsche Schaatsenrijders Bond
NZL	**New Zealand**	Ice Speed Skating New Zealand Inc (Speed) New Zealand Ice Figure Skating Association (Inc) (Figure)
NOR	**Norway**	Norges Skøyteforbund

PHI	**Philippines**	Philippine Skating Union (Figure) (Provisional Member Speed)
POL	**Poland**	Polish Speed Skating Association (Speed) Polish Figure Skating Association (Figure)
QAT	**Qatar**	Qatar Skating Federation (Provisional Member Speed)
KOR	**Rep. of Korea**	Korea Skating Union
ROU	**Romania**	Romanian Skating Federation
RUS	**Russia**	Russian Skating Union (Speed) The Figure Skating Federation of Russia (Figure)
SRB	**Serbia**	Serbian Skating Association
SIN	**Singapore**	Singapore Ice Skating Association
SVK	**Slovak Republic**	Slovak Speed Skating Union (Speed) Slovak Figure Skating Association (Figure)
SLO	**Slovenia**	Slovene Skating Union
RSA	**South Africa**	South African Speed Skating Association (Speed) South African Figure Skating Association (Figure)
ESP	**Spain**	Federacion Española de Deportes de Hielo
SWE	**Sweden**	Svenska Skridskoförbundet (Speed) Svenska Konstakningsförbundet (Figure) Stockholms Allmänna Skridskoklubb (Club Member)
SUI	**Switzerland**	Schweizer Eislauf-Verband Internationaler Schlittschuh-Club Davos (Club Member)
THA	**Thailand**	Figure and Speed Skating Association of Thailand
TUR	**Turkey**	Turkish Ice Skating Federation
UKR	**Ukraine**	Ukrainian Speed Skating Federation (Speed) Ukrainian Figure Skating Federation (Figure)
UAE	**United Arab Emirates**	UAE Ice Sports Federation (Figure)
USA	**USA**	US Speedskating (Speed) The United States Figure Skating Association (Figure)
UZB	**Uzbekistan**	Winter Sports Association of Uzbekistan

INTERNATIONAL SKATING UNION

Headquarters: Registered postal address:

Avenue Juste-Olivier 17, 1006 Lausanne, Switzerland, Phone: (+41) 21 612 66 66,
Fax: (+41) 21 612 66 77, E-Mail: info@isu.ch

OFFICE HOLDERS 2016-2018

Council:

President:		Jan Dijkema	Netherlands
1st Vice President:	Speed Skating:	Tron Espeli	Norway
Vice President:	Figure Skating:	Alexander Lakernik	Russia
Members:	Figure Skating:	Junko Hiramatsu	Japan
		Patricia St. Peter	USA
		Marie Lundmark	Finland
		Benoit Lavoie	Canada
		Maria Teresa Samaranch	Spain
	Speed Skating:	Yang Yang	China
		Jae Youl Kim	Republic of Korea
		Stoytcho G. Stoytchev	Bulgaria
		Roland Etienne Maillard	Switzerland
		Sergio Anesi	Italy
Director General:		Fredi Schmid	Switzerland
Treasurer:		Ulrich Linder	Switzerland
Legal Advisors:		Michael Geistlinger	Austria
		Béatrice Pfister	Switzerland
Figure Skating Sports Directors:		Charles Z. Cyr	USA
		Krisztina Regöczy	Hungary
Speed Skating Sports Director:		Hugo Herrnhof	Italy

Technical Committees:

Single & Pair Skating:	Chair:	Fabio Bianchetti	Italy
	Members:	Susan Lynch	Australia
		Yukiko Okabe	Japan
		Rita Zonnekeyn	Belgium
	Appointed Skater:	Patrick Meier	Switzerland
	Appointed Coach:	David Paul Kirby	USA
Ice Dance:	Chair:	Halina Gordon-Poltorak	Poland
	Members:	Shawn Rettstatt	USA
		Alla Shekhovtsova	Russia
		Hilary Selby	Great Britain
	Appointed Skater:	Sylwia Nowak-Trebacka	Poland
	Appointed Coach:	Maurizio Margaglio	Italy

INTERNATIONAL SKATING UNION

Synchronized Skating:	Chair:	Christopher Buchanan	Great Britain
	Members:	Mika Saarelainen	Finland
		Petra Tyrbo	Sweden
		Lois Long	USA
	Appointed Skater:	Helena Ericson	Sweden
	Appointed Coach:	Cathy Dalton	Canada
Speed Skating:	Chair:	Alexander Kibalko	Russia
	Members:	Nick Thometz	USA
		Jae-Seok Choi	Rep. of Korea
		Christian Breuer	Germany
	Appointed Skater:	Vacant	
	Appointed Coach:	Jildou Gemser	Netherlands
Short Track Speed Skating:	Chair:	Nathalie Lambert	Canada
	Members:	Reinier Oostheim	Netherland
		Xun Xu	China
		Satoru Terao	Japan
	Appointed Skater:	Vacant	
	Appointed Coach:	Vacant	

Disciplinary Commission:

Chair:	Volker Waldeck	Germany
Members:	Allan Böhm	Slovak Republic
	Susan Petricevic	New Zealand
	Albert Hazelhoff	Netherlands

Medical Commission:

Chair:	Jane M. Moran	Canada
Members:	Sanda Dubravcic-Simunjak	Croatia
	Joel C. Shobe	USA
	Harm Kuipers	Netherlands
	Hiroya Sakai	Japan
	Ruben Ambartsumov	Ukraine
	Hannu Koivu	Finland
	Eunkuk Kim	Rep. of Korea

Development Commission: TBA

Honorary Presidents:		Year of election
Viktor Gustaf Balck †	Sweden	1925
Emerich von Szent Györgyi †	Hungary	1933
Herbert J. Clarke †	Great Britain	1955
James Koch †	Switzerland	1967
Jacques Favart †	France	1982
Olaf Poulsen †	Norway	1994
Ottavio Cinquanta	Italy	2016

INTERNATIONAL SKATING UNION

Honorary Vice Presidents:

Sven Låftman †	Sweden	1971
Hendrik Roos †	Netherlands	1977
John R. Shoemaker †	USA	1980
Hermann Schiechtl †	F.R.G.	1984
Georg Pettersson †	Sweden	1986
Jean Heckly†	France	1992
Josef Dedic †	Czech Republic	1994
Lawrence Demmy M.B.E.	Great Britain	1998
Gerhard Zimmerman	Germany	2010
David Dore †	Canada	2016

Honorary Secretary:

Georg Häsler †	Switzerland	1975

Honorary Members:

		Year of election
Hans Pfeiffer †	Austria	1939
Gustavus F. C. Witt †	Netherlands	1953
Marcel Nicaise †	Belgium	1959
Friedrich Kachler †	Austria	1959
Walter S. Powell †	USA	1961
Reginald J. Wilkie †	Great Britain	1963
Georg Krog †	Norway	1969
Ernest Labin †	Austria	1969
Harald Halvorsen †	Norway	1969
Ernest J. G. Matthews †	Great Britain	1977
Heinz Dragunsky †	G.D.R.	1980
Oskar Madl †	Austria	1980
George Blundun †	Canada	1980
Emil Skàkala †	Czechoslovakia	1980
Viktor Kapitonov †	U.S.S.R.	1984
Arne Kvaalen †	Norway	1984
Icilio Perucca †	Italy	1988
Elemér Tertak †	Hungary	1988
Donald H. Gilchrist	Canada	1992
Herman J. van Laer †	Netherlands	1992
Benjamin T. Wright	USA	1992
John Hurdis †	Canada	1992
Charles A. De More †	USA	1994
Hans Kutschera†	Austria	1996
Jean Grenier	Canada	1996
Jürg Wilhelm †	Switzerland	1998
Lars-Olof Eklund †	Sweden	1998
Jan W.P. Charisius †	Netherlands	1998
Wolfgang Kunz	Germany	1998
Joyce Hisey	Canada	2002
Walburga Grimm	Germany	2002
John Hall †	Great Britain	2002
Maria Bialous-Zuchowicz	Poland	2006
Claire Ferguson	USA	2006
Monique Georgelin	France	2006
Myong-Hi Chang	Rep. of Korea	2010
Courtney J.L. Jones O.B.E.	Great Britain	2010

Ulf Lindén	Sweden	2010
Gerhardt Bubník	Czech Republic	2010
James L. Hawkins	USA	2010
Phyllis Howard	USA	2016
Tjasa Andrée-Prosenc	Slovenia	2016
German Panov	Russia	2016
Lan Li	China	2016
György Martos	Hungary	2016
Peter Krick	Germany	2016
Alexander Gorshkov	Russia	2016
Ann Shaw	Canada	2016
Olga Gilardini	Italy	2016

Past Presidents		Years of service
Willem H.J. Mulier †	Netherlands	1892–1894
Viktor Gustav Balck †	Sweden	1895–1924
Ulrich Salchow †	Sweden	1925–1937
Gerrit W.A. van Laer †	Netherlands	1937–1945
Herbert J. Clarke †	Great Britain	1945–1953
James Koch †	Switzerland	1953–1967
Ernest Labin †	Austria	1967
Jacques Favart †	France	1967–1980
Olaf Poulsen †	Norway	1980–1994
Ottavio Cinquanta	Italy	1994–2016

Jacques Favart Trophy
established 1981

		Year of award
Irina Rodnina	U.S.S.R.	1981
Eric Heiden	USA	1983
Jayne Torvill / Christopher Dean	Great Britain	1986
Scott Hamilton	USA	1987
Katarina Witt	G.D.R.	1988
Karin Kania	G.D.R.	1990
Natalia Bestemianova / Andrei Bukin	Russia	1992
Tomas Gustafson	Sweden	1993
Gaétan Boucher	Canada	1994
Bonnie Blair	USA	1998
Kurt Browing	Canada	1998
Johann Olav Koss	Norway	1998
Ludmila & Oleg Protopopov	Switzerland	1998

Georg Häsler Medal
established 1985

Zoltán Balázs †	Hungary	1987
Willi Zipperlen †	Switzerland	1987
F. Ritter Shumway †	USA	1988
Herbert Kunze†	F.R.G.	1989
Assen Pavlov	Bulgaria	1989
W. Thayer Tutt †	USA	1989
Victor Blinov †	U.S.S.R.	1990

Georg Häsler Medal *(continued)*
established 1985

Andrea Ehrig	G.D.R.	1990
Radovan Lipovscak†	Yugoslavia	1990
Courtney J. L. Jones O.B.E.	Great Britain	1991
Milan Duchon	Czechoslovakia	1992
Klaas Schipper	Canada	1992
Lysiane Lauret	France	1993
Anna Sinilkina †	Russia	1993
George Howie†	USA	1993
Pamela E.L. Davis, M.B.E. †	Great Britain	1994
Jurjen Osinga	Netherlands	1994
Ivan Mauer	Slovak Republic	1995
Florea Gamulea	Romania	1996
David E. Morgan †	Australia	1996
Beat Häsler	Switzerland	1998
Mitsuo Matsumoto †	Japan	2000
Robert Moir	Canada	2002
Valentin Piseev	Russia	2002

ISU Gold Award of Merit
established 2004

Lysiane Lauret	France	2006
Lucy Brennan	USA	2007
Susan Johnson	USA	2007
Joachim Franke	Germany	2008
Ann Shaw	Canada	2008
David Mitchell	Great Britain	2016

THE INTERNATIONAL FREESTYLE SKIING COMPETITION RULES (ICR)

BOOK V
JOINT REGULATIONS FOR FREESTYLE SKIING

AERIALS
MOGULS
DUAL MOGULS
SKI CROSS
SKI HALFPIPE
SKI SLOPESTYLE

APPROVED BY THE 49TH INTERNATIONAL SKI CONGRESS, BARCELONA (SPA)
INCL. CHANGES AND PRECISIONS 2015

EDITION AUGUST 2015

FÉDÉRATION INTERNATIONALE DE SKI
INTERNATIONAL SKI FEDERATION
INTERNATIONALER SKI VERBAND

INTERNATIONAL SKI FEDERATION
FEDERATION INTERNATIONALE DE SKI
INTERNATONALER SKI VERBAND

Blochstrasse 2; CH-3653 Oberhofen / Thunersee; Switzerland

Telephone: +41 33 244 61 61
Fax: +41 33 244 61 71
Website: www.fisski.com
FIS Wiki: http://wiki.fisski.com

All rights reserved:

© Copyright: International Ski Federation FIS, Oberhofen, Switzerland.

Oberhofen, August 2015

Table of Contents

1st Section

200 Joint Regulations for all Competitions 6
201 Classification and Types of Competitions 6
202 FIS Calendar 8
203 Licence to participate in FIS Races (FIS Licence) 9
204 Qualification of Competitors 11
205 Competitors Obligations and Rights 11
206 Sponsorships and Advertising 11
207 Advertising and Commercial Markings 15
208 Exploitation of Electronic Media Rights 15
209 Film Rights 19
210 Organisation of Competition 19
211 The Organisation 19
212 Insurance 19
213 Programme 20
214 Announcements 20
215 Entries 20
216 Team Captains' Meetings 21
217 Draw 21
218 Publication of Results 22
219 Prizes 23
220 Team Officials, Coaches, Service Personnel, Suppliers and Firms' Representatives 23
221 Medical Services, Examinations and Doping 24
222 Competition Equipment 25
223 Sanctions 26
224 Procedural Guidelines 27
225 Appeals Commission 29
226 Violation of Sanctions 30

2nd Section

3000 Organisation 32
3010 The Organiser 32
3011 Organiser's Contract 32
3012 Organising Committee 32
3013 Basic Costs of the Organising Committee 33
3020 The Competition Committee & Competition Officials 34
3030 The FIS Technical Delegate (TD) 37
3032 Jury 40
3033 The Judges 41
3034 Advisory Committees, Connection Coach and Jump Shapers 43
3035 Team Captains 44
3036 Team Medical and Service Personnel 44
3037 Competitors' Equipment 44
3041 Technical Installations 45
3042 Start Officials 47
3043 The Start 47
3044 The Finish Area 51
3045 Calculation & Announcement of Results 52
3046 Age Limits 53
3050 Protests 55

3051 Postponement or Cancellation of a Competition 56
3054 Competitor Responsibilities 56
3055 Did Not Start (DNS) 57
3056 Disqualifications (DSQ)..... 57
3057 Re-Runs 58
3058 Did not Finish (DNF) 59
3060 Competition Protocol 60
3061 Accidents..... 63
3062 Insurance..... 64
3065 Organisational Meetings 64

3rd Section

4000 Aerials 65
4001 Definition 65
4002 The Aerials Site 65
4003 Scoring 67
4004 Scoring Procedures 67
4005 Calculation of Degree of Difficulty and Difficulty Charts 67
4006 New Manoeuvres in Competition 67
4007 Qualifications and Age Limits..... 68
4008 Special Procedures: Aerials..... 68
4009 Knock Out Format 69

4th Section

4100 SLOPESTYLE 71
4101 The Slopestyle..... 71
4102 Technical Data..... 71

5th Section

4200 Moguls..... 73
4201 Definition 73
4202 The Moguls Course 73
4203 Scoring 75
4204 Scoring Procedures 75
4206 Special Procedures: Moguls 75

6th Section

4300 Dual Moguls 77
4301 Definition 77
4302 The Dual Moguls Course 77
4303 Scoring 78
4304 Scoring Procedures 79
4305 Competition Procedures (also see Rule no. 3060.2.2) 79
4306 Special Procedures 80

7th Section

4500 Ski Cross 83
4501 Ski Cross Technical Data 83
4502 The Ski Cross Course 84
4503 Course Setting 85
4504 Inspection/Training 87
4505 Execution of Ski Cross 85
4506 Ski Cross Finals Pairings 88
4507 The Start 89
4508 Contact 91
4509 Protests 91
4510 Final Ranking 92
4511 Equipment 92

8th Section

4600 Ski Halfpipe 94
4601 The Halfpipe 100
4602 The Halfpipe site 94
4603 Official Training 94
4604 Competition format - Single format 95
4605 Execution 95
4606 Competitors Equipment 95
4607 Public Address System 95
4608 Judges Stand 95
4609 Start and Finish officials 95
4610 The Start Area 96
4611 The Finish Area 96
4612 Scoring Procedures 96
4613 Halfpipe Course/Site 96
4614 Special Procedures: Halfpipe 96

9th Section

4700 Freestyle Team Competition Rules 97

10th Section

4800 Competitions under Artificial Light 98

1st Section

200 Joint Regulations for all Competitions

200.1 All events in the FIS Calendar must be held under the applicable FIS Rules[1].

200.2 Organisation and Conduct

Rules and instructions for the organisation and conduct of the various competitions are to be found in their respective rules.

200.3 Participation

Competitions listed in the FIS Calendar are only open to all properly licensed competitors entered by their National Ski Associations in accordance with current quotas.

200.4 Special Regulations

The FIS Council can authorise a National Ski Association to adopt rules and regulations to organise national or international competitions with different grounds for qualification but only provided that they do not go beyond the limits laid down in the present rules.

200.5 Control

All competitions listed in the FIS Calendar must be supervised by a Technical Delegate of the FIS.

200.6 Every legal sanction imposed and published in respect of a competitor, official or trainer will be recognised by the FIS and the National Ski Associations respectively.

201 Classification and Types of Competitions

201.1 Competitions with Special Rules and/or Limited Participation

National Ski Associations affiliated with the FIS - or clubs belonging to these National Ski Associations with the approval of their association - may invite neighbouring National Ski Associations or their clubs to their own competitions. But these competitions must not be promulgated or announced as international competitions, and the limitation must be made clear in the announcement.

201.1.1 Competitions with special rules and/or limited participation or including non-members may be held under special competition rules as approved by the FIS Council. Any such rules must be published in the announcement.

201.2 Competitions with Non-Members of the FIS

The FIS Council can authorise one of its member National Ski Associations to invite a non-member organisation (military etc.) to competitions, or accept invitations from such an organisation.

201.3 Classification of Competitions

201.3.1 Olympic Winter Games, FIS World Ski Championships and FIS World Junior Ski Championships

201.3.2 FIS World Cups

[1] Throughout the ICR, the use of the masculine he/his, etc also includes the feminine she/her, etc

201.3.3 FIS Continental Cups

201.3.4 International FIS Competitions (FIS Races)

201.3.5 Competitions with Special Participation and/or Qualifications

201.3.6 Competitions with Non-Members of the FIS

201.4 FIS Disciplines

A discipline is a branch of a sport and may comprise one or several events. For example Cross-Country Skiing is a FIS Discipline, whereas the Cross-Country Sprint is an Event.

201.4.1 Recognition of Disciplines in the International Ski Federation

New disciplines, comprising one or several events, widely practised in at least twenty-five countries and on three continents may be included as part of the programme of the International Ski Federation.

201.4.2 Exclusion of Disciplines from the International Ski Federation

If a discipline is no longer practised in at least twelve National Ski Associations on at least two continents the FIS Congress may decide to exclude the discipline from the programme of the International Ski Federation.

201.5 FIS Events

An event is a competition in a sport or in one of its disciplines. It results in a ranking and gives rise to the award of medals and/or diplomas.

201.6 Types of Competitions

International competitions consist of:

201.6.1 Nordic Events

Cross-Country, Rollerskiing, Ski-Jumping, Ski-Flying, Nordic Combined, Team Competitions in Nordic Combined, Nordic Combined with Rollerskiing or In-line, Team Ski-Jumping, Ski-Jumping on plastic jumping hills, Popular Cross-Country races

201.6.2 Alpine Events

Downhill, Slalom, Giant Slalom, Super-G, Parallel Competitions, Combined, KO, Team Competitions

201.6.3 Freestyle Events

Moguls, Dual Moguls, Aerials, Ski Cross, Halfpipe, Slopestyle, Team Competitions

201.6.4 Snowboard Events

Slalom, Parallel Slalom, Giant Slalom, Parallel Giant Slalom, Super-G, Halfpipe, Snowboard Cross, Big Air, Slopestyle, Team Competitions

201.6.5 Telemark Events

201.6.6 Firngleiten

201.6.7 Speed Skiing Events

201.6.8 *Grass Ski Events*

201.6.9 *Combined Events with other Sports*

201.6.10 *Youth, Masters, Disabled Events, etc.*

201.7 FIS World Championship Programme

201.7.1 To be included in the programme of the FIS World Championships, events must have a recognised international standing both numerically and geographically, and have been included for at least two seasons in the World Cup before a decision about their admission can be considered.

201.7.2 Events are admitted no later than three years before specific FIS World Championships.

201.7.3 A single event cannot simultaneously give rise to both an individual and a team ranking.

201.7.4 Medals may only be awarded at the FIS World Championships and FIS Junior World Championships in all disciplines (Alpine, Nordic, Snowboard, Freestyle, Grass Skiing, Rollerski, Telemark, Speed Skiing) when there are a minimum of 8 nations participating in team competitions and 8 nations represented in an individual event.

202 FIS Calendar

202.1 Candidature and Announcement

202.1.1 Each National Ski Association is entitled to present its candidature for the organising of the FIS World Ski Championships in accordance with the published "Rules for the Organisation of World Championships"

202.1.2 For all other competitions, the registrations for inclusion in the International Ski Calendar have to be made to FIS by the National Ski Association according to the Rules for the FIS Calendar Conference published by the FIS.

202.1.2.1 The applications of the National Ski Associations (NSA) have to be sent to FIS using the FIS Calendar program (ftp://ftp.fisski.ch/Software/Programs/) by 31st August (31st May for the Southern Hemisphere).

202.1.2.2 *Allocation of competitions*
Allocation of the competitions to the National Ski Associations is made through the electronic communication process between FIS and the National Ski Associations. In the case of FIS World Cup competitions, the calendars are subject to the approval of the Council, on proposal of the respective Technical Committee.

202.1.2.3 *Homologations*
Competitions that appear in the FIS Calendar may only take place on competition courses or jumping hills homologated by the FIS.
The homologation certificate number must be indicated when applying for the inclusion of competition in the FIS Calendar.

202.1.2.4 *Publication of the FIS Calendar*

The FIS calendar is published by FIS on the FIS website www.fis-ski.com. It will be updated to reflect cancellations, postponements and other changes continuously by FIS.

202.1.2.5 *Postponements*

In case of the postponement of a competition listed in the FIS Calendar, the FIS has to be informed immediately and a new invitation must be sent to the National Ski Associations, otherwise the competition cannot be considered for FIS points.

202.1.2.6 *Calendar Fees*

In addition to the annual subscription, a calendar fee is set by the FIS Congress and is due for each year and for each event listed in the FIS Calendar. For additional events, a 50% surcharge will be made in addition to the regular calendar fee for applications submitted 30 days before the date of the competition. The calendar fee for a competition that has to be rescheduled remains the responsibility for payment in full of the original organising National Ski Association.

At the beginning of the season, each NSA will receive an invoice for 70 % of its total invoice from the previous season. This amount will be debited from its FIS account. At the end of the season each NSA will receive a detailed invoice for all registered competitions during the season. The balance will be subsequently be debited or credited to the NSA account at FIS.

202.1.3 *Appointment of Race Organiser*

In the event that the National Ski Association appoints a race organiser, such as an affiliated ski club, it shall do so using the form “Registration Form National Ski Association and Organiser” or by means of a similar written agreement. An application by a National Ski Association for inclusion of an event on the International Ski Calendar shall mean that the necessary agreement to organise the event has been established.

202.2 **Organisation of Races in other Countries**

Competitions which are organised by other National Ski Associations may only be included in the FIS Calendar when the National Ski Association of the country concerned where the competitions will be organised gives its approval.

203 **Licence to participate in FIS Races (FIS Licence)**

A licence to participate in FIS races is issued by a National Ski Association to competitors who fulfil the criteria for participation through registering the competitor with FIS in the respective discipline(s).

203.1 The FIS licence year begins on July 1st and finishes on June 30th of the following year.

203.2 To be eligible for participation in FIS events, a competitor must have a licence issued by his National Ski Association. Such a licence shall be valid in the Northern and Southern hemispheres for the licence year only. The validity of a licence can be limited to participation in one specific country or in one or more specific events.

203.2.1 The National Ski Association must guarantee that all competitors registered with a FIS License to participate in FIS races accept the Rules of the International Ski Federation, in particular the provision which foresees the exclusive competence of the Court of Arbitration for Sport as the court of appeal in doping cases.

203.3 A National Ski Association may only issue a FIS licence to participate in FIS races when the competitor has proven his nationality and therefore eligibility by submitting a copy of his passport and signed the Athletes Declaration in the form approved by the FIS Council and returned it to his National Ski Association. All forms from under-age applicants must be counter signed by their legal guardians. Both the copy of the passport and signed Athletes Declaration must be made available to FIS on request.

203.4 During the FIS licence year, a competitor may only participate in International FIS competitions with a FIS licence to participate in FIS races issued by one National Ski Association.

203.5 Application for a change of FIS Licence Registration

All applications to change licence registration from one member National Ski Association to another are subject to consideration by the FIS Council at its Meetings in the spring. In principle an application to change licence registration will not be granted unless the competitor demonstrates his personal association with the new nation.

Prior to submitting an application to change licence registration a competitor must possess the citizenship and passport of the country for which he wishes to compete. In addition, the competitor must have had his principal legal and effective place of residence in the new country for a minimum of two (2) years immediately prior to the date of the request to change registration to the new country/National Ski Association. An exception to the two year residency rule may be waived if the competitor was born in the territory of the new country, or whose mother or father is a national of the new country. Applications will not be accepted if a parent has obtained a passport for the new country, but is not resident, and/or there is no family ancestry. Furthermore the competitor is required to submit a detailed explanation with the application about his personal circumstances and the reason for requesting a change of licence registration.

203.5.1 If a competitor has already participated in FIS calendar events for a National Ski Association, he must have the written agreement to be released from the former National Ski Association in addition to the citizenship, passport and residency requirements in art. 203.5 before the new National Ski Association may submit a request to FIS for a change of registration.

If such a written agreement is not given, the competitor may not participate in any FIS calendar events for a period of twelve months from the end of the last season in which he competed for his present National Ski Association, nor may he be issued with a licence to participate in FIS races by the new National Ski Association.

These rules are also valid when a competitor has more than one nationality and would like to change National Ski Association licence registration.

203.5.2 The FIS Council reserves the right in its absolute discretion, to grant or to decline to grant, a change of licence notwithstanding the fulfilment of the aforementioned conditions where it deems it is contrary to the spirit of the rule and in the best interests of the International Ski Federation to do so (e.g. to decline to grant a change of licence if a member National Ski Association tries to “import” a competitor).

203.5.3 In the event that a competitor does not fulfil all the criteria required to apply for a change of National Ski Association licence registration, the onus shall be on the competitor to demonstrate in writing to the satisfaction of the FIS Council that exceptional circumstances exist and it is in the best interests of the International Ski Federation to grant the change.

203.5.4 A competitor will retain his FIS points if he changes his National Ski Association under the condition that the former National Ski Association granted the release of the competitor.

203.5.5 In the event that any of the documents for an application to change licence registration submitted by the National Ski Association (letter of release from the former National Ski Association, passport, residency papers) are found to be false, the FIS Council will sanction the competitor and the new National Ski Association.

204 Qualification of Competitors

204.1 A National Ski Association shall not support or recognise within its structure, nor shall it issue a licence to participate in FIS or national races to any competitor who:

204.1.1 has conducted himself in an improper or unsportsmanlike manner or has not respected the FIS medical code or anti-doping rules,

204.1.2 accepts or has accepted, directly or indirectly, any money-payments for the participation at competitions,

204.1.3 accepts or has accepted a prize of a higher value than fixed by article 219,

204.1.4 permits or has permitted his name, title or individual picture to be used for advertising, except when the National Ski Association concerned, or its pool for this purpose, is party to the contract for sponsorship, equipment or advertisements.

204.1.5 knowingly competes or has competed against any skier not eligible according to the FIS Rules, except if:

204.1.5.1 the competition is approved by the FIS Council, is directly controlled by the FIS or by a National Ski Association, and the competition is announced "open",

204.1.6 has not signed the Athletes Declaration,

204.1.7 is under suspension.

204.2 With the issuance of a licence to participate in FIS competitions and entry the National Ski Association confirms, that valid and sufficient accident insurance for training and competition is in place for the competitor and assumes full responsibility.

205 Competitors Obligations and Rights

205.1 The competitors are obliged to make themselves familiar with the appropriate FIS Rules and must comply with the additional instructions of the Jury. Competitors must also follow the FIS rules regulations.

205.2 Competitors are not permitted to use doping. (see FIS Anti-Doping Rules and Procedural Guidelines).

205.3 As stated in the Athletes Declaration, competitors have the right to inform the Jury of safety concerns they may have regarding the training and competition courses. More details are given in the corresponding discipline rules.

205.4 Competitors who do not attend the prize-giving ceremonies without excuse lose their claim to any prize including prize money.
In exceptional circumstances, the competitor may be represented by another member of his team, but this person has no right to take his place on the podium.

205.5 Competitors must behave in a correct and sportsmanlike manner towards members of the Organising Committee, volunteers, officials and the public.

205.6 Support for the Competitors

205.6.1 A competitor is registered with FIS by his National Ski Association to participate in FIS races may accept:

205.6.2 full compensation for travel cost to training and competition,

205.6.3 full reimbursement for accommodation during training and competitions,

205.6.4 pocket money,

205.6.5 compensation for loss of income according to decisions of his National Ski Association,

205.6.6 social security including insurance for training and competition,

205.6.7 scholarships.

205.7 A National Ski Association may reserve funds to secure a competitor's education and future career after retiring from active competitive skiing.
The competitor has no claim to these funds which shall be dispensed only according to the judgement of his National Ski Association.

205.8 Gambling on Competitions

Competitors, trainers, team officials and technical officials are prohibited from betting on the outcome of competitions in which they are involved. Reference is made to the FIS Betting and other Anti-Corruption Violations Rules July 2013.

206 Advertising and Sponsorship

In the context of this rule advertising is considered as the presentation, of signage or other visibility at the venue informing the public of the name of a product or service to achieve awareness of a company or an organisation and its brand name, activities, products or service. On the other hand Sponsorship provides a company with the opportunity to have a direct association with the competition or series of events.

206.1 Olympic Winter Games and FIS World Championships

All Advertising and Sponsorship rights to the Olympic Winter Games and FIS World Championships belong to the IOC and to the FIS respectively and are subject to separate contractual arrangements.

206.2 FIS Events

For all FIS Events the FIS Advertising Rules define the advertising opportunities in the competition area and are subject to the approval of the FIS Council. For the FIS World Cup Events the FIS Advertising Rules form an integral part of the FIS Organisers Agreement with the National Ski Associations and Organisers.

206.3 **Member National Ski Associations**

Each FIS affiliated National Ski Association that organises events in its country which are included in the FIS calendars, has the authority as the owner of the event advertising rights to enter into contracts for their sale. In the case of FIS World Cup competitions these rights shall be defined in the Organiser Agreement upon approval of the FIS Council and considering the National Ski Associations responsibilities.

In cases where a National Ski Association organises events outside its own country these FIS Advertising rules also apply.

206.4 **Title and Presenting Sponsorship Rights**

In the case of FIS series approved by the FIS Council, FIS markets the rights of the title/presenting sponsor (alternative naming possible) package. For the FIS World Cup series these are marketed to appropriate sponsors that promote the image and values of the discipline concerned. The revenue generated from the sale of the title/presenting sponsor rights is invested by FIS to provide a professional organisation.

206.5 **Use of Markings and supports**

All Advertising and commercial markings and supports used shall comply with the technical specifications set forth in the applicable FIS Advertising Rules.

206.6 **Advertising Packages**

Location, number, size and form of the advertising are specified in the FIS Advertising Rules for each discipline. Detailed information including graphical illustrations is laid out in the discipline-specific Marketing Guides which are published on the FIS Website. The Marketing Guides are reviewed and updated as necessary by the Committee for Advertising Matters and approved by the FIS Council prior to their publication.

206.7 **Sponsorships by commercial betting companies**

206.7.1 FIS will not allocate Title / Presenting Sponsor rights to commercial betting companies

206.7.2 Sponsorships of events by commercial betting companies is permitted subject to 206.7.3 below.

206.7.3 Advertising of commercial betting companies or other betting activities on or with the athletes, e.g. head sponsors, competition suits, starting bibs, testimonials are strictly prohibited with the exception of lotteries and companies operating non-sports betting only.

206.8 *A National Ski Association or its pool may enter into contracts with a commercial firm or organisation for financial sponsorship and or the supply of goods or equipment if the specific company or organisation is acknowledged as an Official Supplier or Sponsor by the National Ski Association.*

Advertising using photographs, likeness or names of FIS competitors with any sportsman not eligible according to either the FIS eligibility rules or the eligibility rules of the IOC, is forbidden.

Advertising with or on competitors with tobacco or alcohol products or drugs (narcotics) is forbidden.

206.9 All compensation under such contracts must be made to the National Ski Association or its ski pool which shall receive the compensation subject to the regulations of each National Ski Association.
Competitors may not directly receive any part of such compensation except as stated in art. 205.6. The FIS may at any time call for a copy of the contract.

206.10 Equipment goods supplied to and used by the national team must, with reference to markings and trademarks, conform with the specifications stated in art. 207.

207 Competition Equipment and Commercial Markings

207.1 Competition Equipment at FIS Events

Only the competition equipment, according to the FIS rules on advertising, provided by the National Ski Association, complete with the commercial markings approved by the National Ski Association, may be worn in FIS World Cup and FIS World Ski Championship competitions. Obscene names and/or symbols on clothing and equipment are forbidden.

207.1.1 At FIS World Ski Championships, FIS World Cups and all events of the FIS Calendar, a competitor is not allowed to take equipment (skis/board, poles, ski boots, helmet, glasses) to the official ceremonies involving anthems and/or flag raising. Holding/carrying equipment on the victory podium after conclusion of the whole ceremony (handing over trophies and medals, national anthems) for press photos, pictures, etc. is however permitted.

207.1.2 Winners presentation / Equipment on the podium

At FIS World Ski Championships and all events of the FIS Calendar, a competitor is allowed to take the following equipment on the podium:

- Skis / Snowboards
- Footwear: The athletes may wear their boots on their feet, but are not allowed to wear them anywhere else (such as around their neck). Other shoes cannot be taken on the podium during presentation except if they are worn on the feet.
- Poles: not on/around skis, normally in the other hand
- Goggles: either worn or around the neck
- Helmet: if worn only on the head and not on another piece of equipment, e.g. skis or poles
- Ski straps: maximum of two with name of the producer of skis; eventually one can be used for a wax company
- Nordic Combined and Cross-Country Ski Poles Clips. A clip can be used to hold the two poles together. The clip can be the width of the two poles, though not wider than 4 cm. The length (height) can be 10 cm. The long side of the clip is to be parallel to the poles. The commercial marking of the pole manufacturer can cover the entire surface of the clip.
- All other accessories are prohibited: waist bags with belt, phones on neck-bands, bottles, rucksack/backpack, etc.

207.1.3 An unofficial presentation (flower ceremony) of the winner, and the winners ceremony immediately after the event in the event area with the national anthem even before the protest time has expired, is allowed at the organiser's own risk. Visible wearing of the starting bibs is mandatory.

207.1.4 Visible wearing of the starting bib of the event or other outerwear of the NSA is mandatory in the restricted corridor (including the leader board and TV interview locations).

207.2 **Commercial Markings**

Specifications about the size, the form and the number of commercial markings on equipment and clothing as well as the by-laws for commercial markings and for advertising are to be reviewed by the Committee for Advertising Matters and approved by the FIS Council each spring for the following competition season and published by the FIS.

207.2.1 The rules governing commercial markings and advertising on equipment and clothing as well as the relevant by-laws published in the Specifications for Competition Equipment/Commercial Markings must be followed.

207.2.2 Any competitor who breaches the rules is subject to sanction, as provided for in art. 223.1.1. An offence for which a sanction may apply and a penalty be imposed is defined as conduct that is in violation or non-observance of competition rules.

2072.3 If a National Ski Association fails to enforce these rules with on its own competitor(s) or for any reason prefers to refer the case to the FIS, the FIS may take immediate steps to suspend a competitor's licence. The competitor concerned and/or his National Ski Association have the right to make an appeal before a final decision is taken.

207.24 If an advertiser uses the name, title or individual picture of a competitor in connection with any advertisement, recommendation or sale of goods without the approval or knowledge of the competitor, the competitor may give a "power of attorney" to his National Ski Association or to the FIS to enable them, if necessary, to take legal action against the company in question. If the competitor concerned fails to do so, the FIS shall judge the situation as if the competitor had given permission to the company.

207.25 The FIS Council shall be informed of infractions or breaches of these rules that have taken place with regard to the qualification of competitors, sponsorship and advertising and support for the competitors, and shall review what measures to take to deal with cases.

208 **Exploitation of Electronic Media Rights**

208.1 **General Principles**

208.1.1 *Olympic Winter Games and FIS World Championships*

All Media rights to the Olympic Winter Games and FIS World Championships belong to the IOC and to the FIS respectively, and are subject to separate contractual arrangements.

208.1.2 *Rights owned by the member National Ski Associations*

Each FIS affiliated National Ski Association that organises events in its country which are included in the annual FIS calendars, has the authority as the owner of the electronic media rights to enter into contracts for the sale of the electronic media rights on those events. In cases where a National Ski Association organises events outside its own country, these rules also apply, subject to bi-lateral agreement with the National Ski Association of the country where the event takes place.

208.1.3 *Promotion*

Contracts shall be prepared in consultation with the FIS with the intention of giving the widest promotion and exposure to the sports of skiing and snowboarding and considering the best interests of the National Ski Associations.

208.1.4 *Access to events*

For all competitions, admission of personnel and their equipment to the media areas will be limited to those having the necessary accreditation and access passes. Priority access will be given to rights holders and the system of accreditation and access control must avoid possible abuse by non-rights holders.

208.1.5 *Control by the FIS Council*

The FIS Council exercises control over the adherence to the principles of this Rule by National Ski Associations and all organisers. Should a contract or individual clauses thereof, create a major conflict of interest for the FIS, a member National Ski Association or its organiser, then this will be evaluated by the FIS Council. Full information will be provided so that the appropriate solution can be found.

208.2 Definitions

In the context of this rule the following definitions will apply:

"Electronic Media Rights" means the rights for Television, Radio, Internet and Mobile devices.

"Television rights" means the distribution of television images, both analogue and digital, comprising video and sound, by means of terrestrial transmitters, satellite, cable, fibre or wire for public and private viewing on television screens. Pay-per-view, subscription, interactive TV, video on demand services, IPTV or similar technologies, are also included in this definition.

"Radio rights" means the distribution and reception of radio programmes, both analogue and digital, over the air, by wire or via cable to devices, both fixed and portable.

"Internet" means access to images and sound through interconnected computer networks.

"Mobile and portable devices" means the provision of images and sound through a telephone operator and receivable on mobile telephone or other non fixed devices, such as Personal Digital Assistants.

208.3 Television

208.3.1 *Standard of production and promotion of competitions*

In the agreements concerning production with a TV organisation or agency acting as host broadcaster, the quality of TV transmissions for ski and snowboard events published in the FIS Calendar – especially for FIS World Cup competitions – must be considered. Of particular importance, while taking into consideration applicable national laws and rules affecting broadcasting, are:

a) Top quality and optimal production of a TV signal (for live or deferred transmission depending on the event) in which sport is the centrepiece;

b) Adequate consideration and appearance of venue advertising and event sponsors;

c) A standard of production in conformity with the FIS TV Production Guidelines and appropriate to current market conditions for the discipline and to the level of the FIS competition series. This means live coverage of the entire event including the winner presentation for live transmission (unless circumstances determine that a live production is not provided). This coverage shall be produced in a neutral way, shall not concentrate on any athlete or nation and shall show all competitors

d) The live international signal of the host broadcaster must include appropriate graphics in English, particularly the official FIS logo, timing and data information and results, and international sound.

e) Where it is appropriate to the individual TV market, there should be live TV transmission in the country where the event takes place and in other countries with a high interest.

208.3.2 *Production and Technical costs*

Except when otherwise agreed between the National Ski Association and the agency/company managing the rights, the cost of producing the television signal for the exploitation of the different rights will be borne by the broadcaster having acquired the rights in the country where the competition takes place or a production company mandated to produce the signal by the company owning the rights. In certain cases, the organiser or the National Ski Association may assume these costs.

For each of the different rights granted under this rule the technical expenses that are to be paid for by those organisations that have acquired the rights and which are seeking to access the television signal (original picture and sound without commentary), have to be agreed between the producing company or the agency/company managing the rights, as applicable. This also applies to any other production costs that may be requested.

208.3.3 *Short extracts*

Short extracts granting news access for non-rights holders are to be provided to television companies according to the following rules. It is noted that in a number of countries national legislation governs the showing of short extracts in news programmes.

These extracts may only be used in regularly scheduled news programmes and cannot be kept for archive purposes

a) In those countries where legislation exists regarding news access to sporting events then this legislation will always hold precedence for reporting on FIS events.

b) In those countries where no legislation exists regarding news access by competing networks and provided that agreements between the company managing the rights and the primary rights holder take precedence then short extracts of a maximum of 90 seconds news access will be granted to competing networks by the agency/company managing the rights for transmission four hours after the rights holding network has shown the competition. The use of this material will cease 48 hours after the end of the competition. If the rights holding network delays its transmissions by more than 72 hours from the end of the competition, then competing networks can show extracts of a maximum of 45 seconds commencing 48 hours after and ending 72 hours after the event itself. Any request to exploit short extracts shall be addressed to the agency/company managing the rights which shall grant to the broadcasters access to the short extracts subject to agreement regarding the technical costs incurred to receive the material.

c) In those countries where no transmission rights have been purchased by a television company, all television organisations will be able to transmit short extracts of 45 seconds as soon as the material is available, subject to agreement with the agency/company managing the rights regarding the technical costs to be incurred to receive the material. Permission for the use of this material will expire after 48 hours.

d) Short extracts will be produced by the host broadcaster or the agency/company managing the rights and distributed by that agency/company, taking into consideration 208.3.2 above.

208.4 Radio

The promotion of FIS events through radio programmes will be encouraged by making available accreditation to the principle radio station(s) in each interested country. Access to the venue will be granted solely to those radio organisations that have obtained the necessary contractual authorisation from the rights holder, and will be only for the production of radio (audio) programmes. If accepted by national practice and the authorisation is granted, these programmes can also be distributed on the internet site of the radio station.

208.5 Internet

Unless the contract for the sale of the Electronic Media Rights on FIS events states otherwise, each television rights holder that also acquires the internet rights, will ensure that video streams from its website other than short extracts are geoblocked against access from outside its own territory. Regularly scheduled news bulletins containing material of FIS events may be streamed on the rights holding broadcaster's website, provided no changes are made to the bulletin as transmitted in the original programme.
Video and audio material produced in public areas where accreditation, tickets or other permissions are not required to gain access must not contain race footage. It is recognised that new technology provides members of the public with the possibility to produce unauthorised video recordings that may be posted on websites. Appropriate information advising that the unauthorised production and use of video material is prohibited and that legal proceedings could be taken, will be shown at all entrances and printed on entrance tickets.
All National Ski Associations and the rights holders/agencies will give permission for short extracts to be placed on the FIS website for non-commercial use subject to the following conditions:

a) When short extracts have not been acquired for Internet distribution the maximum duration of the news material from FIS competitions will be 30 seconds per discipline/per session and will be accessible on the FIS website until 48 hours after the end of the competition. The financial conditions relating to the provision of this material will be agreed between the FIS and the rights owner.

b) The material will be provided by the rights owner or host broadcaster as soon as possible, but at the latest six hours after the end of the competition.

208.6 Mobile and portable devices

In the cases where the rights for distribution by mobile and portable devices have been awarded, the rights purchaser/operator will be free to produce from the television signal the content it considers best meets the needs of its customers. Any live streaming of television programmes on a national basis using these devices shall not be altered from that available through other distribution channels.

In countries where no mobile distribution rights have been sold, short extracts or clips of a maximum duration of 20 seconds will be offered to operators when the material has been produced and for a period of 48 hours on the condition that the operators pay all related technical costs to the agency/company managing the rights.

208.7 **Future developments**

The principles contained in this Rule 208 shall be the basis for the exploitation of Electronic Media Rights to FIS events in the future. The FIS Council, on the recommendation of the National Ski Associations, the relevant commissions and experts, will establish the conditions considered appropriate to each new development.

209 **Film Rights**

All agreements regarding film productions of FIS competitions will be between the film producer and the National Ski Association or the company managing the related rights. All contractual arrangements regarding the exploitation of other media rights will be respected.

210 **Organisation of Competition**

211 **The Organisation**

211.1 **The Organiser**

211.1.1 The Organiser of a FIS competition is the person or group of persons who make the necessary preparations and directly carry out the running of the competition in the resort.

211.1.2 If the National Ski Association itself is not the competition organiser, it may appoint an affiliated club to be the organiser.

211.1.3 The organiser must ensure that accredited persons accept the regulations regarding the competition rules and Jury decisions, and in World Cup races the organiser is obliged to obtain the signature of all persons who do not have a valid FIS season accreditation to this effect.

211.2 **The Organising Committee**

The Organising Committee consists of those members (physical or legal) who are delegated by the organiser and by the FIS. It carries the rights, duties and obligations of the organiser.

211.3 Organisers which hold competitions involving competitors not qualified under art. 203 - 204 have violated the International Competition Rules and measures are to be taken against them by the FIS Council.

212 **Insurance**

212.1 The organiser must take out liability insurance for all members of the Organising Committee. The FIS shall provide its employees and appointed officials, who are not members of the Organising Committee (e.g. equipment controller, medical supervisor, etc.), with liability insurance when they are acting on behalf of the FIS.

212.2 Before the first training day or competition, the organiser must be in possession of a binder or cover notes issued by a recognised insurance company and present it to the Technical Delegate. The Organising Committee requires liability insurance with coverage of at least CHF 1 million; whereby it is recommended that this sum is at least CHF 3 million; this sum can be increased according to decisions of the FIS Council (World Cup etc).

Additionally, the policy must explicitly include liability insurance claims by any accredited participant, including competitors, against any other participant including but not limited to officials, course workers, coaches, etc

212.3 The Organiser respectively its' National Ski Association may request the FIS insurance broker to arrange cover for the competition (at the cost of the Organiser) if the organiser does not have the necessary insurance cover in place.

212.4 All competitors participating in FIS events must carry accident insurance, in sufficient amounts to cover accident, transport and rescue costs including race risks. The National Associations are responsible for adequate insurance coverage of all their competitors sent and inscribed by them.
The National Ski Association or their competitors must be able to show proof of the respective insurance coverage at any time on request of the FIS, one of its representatives or the organising committee.

213 Programme

A programme must be published by the organisers for each competition listed in the FIS Calendar which must contain the following:

213.1 name, date and place of the competitions, together with information on the competition sites and the best ways of reaching them,

213.2 technical data on the individual competitions and conditions for participation,

213.3 names of principal officials,

213.4 time and place for the first team captains' meeting and the draw,

213.5 timetable for the beginning of the official training and the start times,

213.6 location of the official notice board,

213.7 time and place for the prize-giving,

213.8 final date of entry and address for entries, including telephone, telefax and e-mail address.

214 Announcements

214.1 The Organising Committee must publish an announcement for the event. It must contain the information required by art. 213.

214.2 Organisers are bound by the rules and decisions of the FIS in limiting the number of entries. A further reduction in entries is possible under art. 201.1 provided it is made clear in the announcement.

214.3 Postponements or cancellations of competitions and programme alterations must be communicated immediately by telephone, e-mail or telefax to the FIS, all invited or entered National Ski Associations and the appointed TD. Competitions moved to an earlier date must be approved by the FIS.

215 Entries

215.1 All entries must be sent so that the Organising Committee receives them before the final date of entry. The organisers must have a final and complete list not later than 24 hours before the first draw.

215.2 National Ski Associations are not permitted to enter and draw the same competitors in more than one competition on the same date.

215.3 Only National Ski Associations are entitled to make entries for international competitions. Every entry should include:

215.3.1 code number, name, first name, year of birth, National Ski Association;

215.3.2 an exact definition of the event for which the entry is made.

215.4 Entries for FIS World Championships (see Rules for the Organisation of FIS World Championships).

215.5 The entry of a competitor by the National Ski Association for a race shall constitute a contract solely between the competitor and the organiser and shall be governed by the Athletes Declaration.

216 Team Captains' Meetings

216.1 The time and location of the first team captains' meeting and of the draw must be shown in the programme. The invitations for all other meetings have to be announced to the team captains at their first meeting. Emergency meetings must be announced in good time.

216.2 Representation by a substitute from another nation during discussions at team captains' meetings is not allowed.

216.3 The team captains and trainers must be accredited by the organisers according to quota.

216.4 Team captains and trainers must obey the ICR and the decisions of the Jury and must behave in a proper and sportsmanlike manner.

217 Draw

217.1 Competitors' starting order for each event and each discipline is decided according to a specific formula by draw and/or point order.

217.2 The competitors entered by a National Ski Association will only be drawn if provided written entries have been received by the organiser before the closing date.

217.3 If a competitor is not represented at the draw by a team captain or trainer, he will only be drawn if it is confirmed by telephone, telegram, e-mail or telefax by the beginning of the meeting that the competitors who are entered will participate.

217.4 Competitors who have been drawn and are not present during the competition must be named by the TD in his report, indicating if possible the reasons for absence.

217.5 Representatives of all the nations taking part must be invited to the draw.

217.6 If a competition has to be postponed by at least one day, the draw must be done again.

218 Publication of Results

218.1 The unofficial and official results will be published in accordance with the rules for the specific event.

218.1.1 *Transmission of Results*

For all international competitions, there must be direct communication between the Start and the Finish. In Olympic Winter Games the communications must be assured by fixed wiring.
In the data service area, access to the internet (at least ADSL speed) is required for World Cup, World Championships and Olympic Winter Games competitions.

218.2 The data and timing generated from all FIS competitions is at the disposal of FIS, the organiser, the National Ski Association and participants for use in their own publications, including websites. Use of data and timing on websites is subject to the conditions laid down in the FIS Internet Policies.

218.3 FIS Internet Policies and Exchange of Data relating to the FIS Competitions

218.3.1 *General*

As part of the ongoing promotion of skiing and snowboard, the International Ski Federation encourages and appreciates the efforts made by the National Ski Associations to provide messages and information to their members and fans. An increasingly important medium for this provision of information is through the Internet.

The following policy has been established in order to assist National Ski Associations through the provision of data from FIS competitions, and to clarify certain conditions that relate to the use and presentation of the data from FIS competitions.

218.3.2 *FIS Calendar data*

A specific FIS Calendar programme has been developed for the free use of National Ski Associations and other third parties. An updated Fiscal zip file containing revised calendar information will be available every week from the ftp site: ftp://ftp.fisski.ch for uploading into the FIS Calendar programme.

Thereafter it may be exported into National Ski Association's own software if necessary for planning purposes, etc. This data may not be passed on to third parties or organisation for commercial use.

218.3.3 *Results and Standings*

National Ski Associations can obtain official results, after they have been approved by the FIS Points verification procedure at the FIS Office. This data will be available on request to the FIS IT Manager who will provide the necessary instructions and/or routines on a case-by-case basis. The FIS World Cup results will include a credit to the results service providers. Standings from the various Cup series will also be available after receipt from the results service providers in the case of the FIS World Cup, or they have been input manually for other Cup series.

1. The results and data from FIS competitions may only be used on the National Ski Associations', Organisers' and participants' websites and may not be passed on for commercial use to third parties or organisations.
   The National Ski Association may download the data into its' own software for evaluating performances, etc.

2. National Ski Associations who wish to display results on their website, but do not have a database structure to upload the raw data can create a link to the relevant page of the FIS website. The exact addresses can be obtained from the FIS IT Manager.

3. A link will be established from the FIS Website to all National Ski Associations with their own website, as well as the ski industry and relevant media websites on requests. A reciprocal link to the FIS website should also be created.

218.3.4 *Organisers access to results*

Organisers of FIS World Cup races can obtain official results from their races after they have been approved by the FIS Points verification procedure in the results database. The upload is a computer-automated procedure for World Cup races and takes place immediately after the end of the race.

The pdf file containing the results and standings can be downloaded from www.fis-ski.com and from ftp://ftp.fisski.ch/ followed by the discipline code and the name of the site: AL (Alpine), CC (Cross-Country), JP (Ski Jumping), NK (Nordic Combined); SB (Snowboarding), FS (Freestyle) etc. The individual competition can be identified by the competition codex as published on the detailed page of the calendar on www.fis-ski.com.

219 Prizes

219.1 The detailed rules concerning the awarding of prizes will be published by the FIS. Prizes shall consist of mementos, diplomas, cheques or cash. Prizes for records are forbidden. The FIS Council decides in the autumn on the minimum respectively maximum values of the prize money approximately one and a half years before the competition season. The organisers have to inform the FIS by October 15th of the amount.

219.2 If two or more competitors finish with the same time or receive the same points, they shall be given the same placing. They will be awarded the same prizes, titles or diplomas. The allocation of titles or prizes by drawing lots or by another competition is not allowed.

219.3 All prizes are to be awarded no later than the final day of a competition or event series.

220 Team Officials, Coaches, Service Personnel, Suppliers and Firms' Representatives

In principle these regulations apply to all disciplines, taking into consideration the special rules.

220.1 The Organising Committee of an event must provide the Technical Delegate with a list of persons accredited to the competition.

220.2 It is forbidden for suppliers and for persons in their service to advertise inside the restricted area or to wear clearly visible commercial markings on their clothing or equipment which do not conform with art. 207.

220.3 Team officials accredited service personnel and suppliers receive from the FIS an official FIS accreditation and must perform their specified function. The individual organisers are free to accredit additional company representatives or other important persons.

220.4 Only persons who have the official FIS accreditation or a special accreditation from the organiser for course or jumping-hill have access to the courses and jumping-hills (according to special rules of the discipline).

220.5 The Different Types of Accreditation

220.5.1 Technical Delegates, the Jury, and the persons mentioned in art. 220 with clearly visible accreditation have access to the courses and jumping-hills.

220.5.2 Servicemen attached to teams are permitted entry to start area and service area at the finish. They are not allowed entry to the courses or jumping-hills.

220.5.3 Company representatives accredited at the discretion of the organisers who do not have FIS accreditation are not permitted entry to the courses and restricted service areas.

221 Medical Services, Examinations and Doping

221.1 National Ski Associations are responsible for the fitness of their competitors to race. All competitors, male and female are required to undergo a thorough evaluation of their medical health. This evaluation is to be conducted within the competitor's own nation.

221.2 If requested by the FIS Medical Committee or its representative, competitors must undergo a medical examination before or after the competition.

221.3 Doping is forbidden. Any offence under these FIS Anti Doping Rules will be punished under the provisions of the FIS Anti-Doping Rules.

221.4 Doping controls may be carried out at any FIS competition (as well as out-of competition). Rules and procedures are published in the FIS Anti-Doping Rules and FIS Procedural Guidelines.

221.5 Gender of the Competitor

If any question or protest arises as to the gender of the competitor, FIS shall assume responsibility for taking the necessary steps to determine the gender of the competitor.

221.6 Medical Services Required from Event Organisers

The health and safety of all those involved in a FIS competition is a primary concern of all event Organisers. This includes the competitors as well as volunteers, course workers and spectators.

The specific composition of the medical support system is dependent on several variables:

- The size, level, type of the event being held (World Championships, World Cup, Continental Cup, FIS-level, etc.) together with the local medical standards of care and geographic locations and circumstances.
- The estimated number of competitors, support staff and spectators
- The scope of responsibility for the Event Medical Organisation (competitors, support staff, spectators) should also be determined.

The Organiser / The Chief of Medical and Rescue Services must confirm with the race director or technical delegate that the required rescue facilities are in place before starting the official training or competition. In the event of an incident, or issue that prevents the primary medical plan from being utilized, the back up plan must be in place before recommencing the official training or competition.

The specific requirements concerning facilities, resources, personnel and team physicians are contained in the respective discipline rules and the FIS Medical Guide.

222 Competition Equipment

222.1 A competitor may only take part in a FIS competition with equipment which conforms to the FIS Regulations. A competitor is responsible for the equipment that he uses (skis, snowboard, bindings, ski boots, suit, etc). It is his duty to check that the equipment he uses conforms to the FIS specifications and general safety requirements and is in working order.

222.2 The term competition equipment encompasses all items of equipment which the competitor uses in competitions. This includes clothing as well as apparatus with technical functions. The entire competition equipment forms a functional unit.

222.3 All new developments in the field of competition equipment must be approved in principle by the FIS.
The FIS does not take any responsibility for the approval of new technical developments, which at the time of introduction may contain unknown risk to the health or cause an increase in the risk of accidents.

222.4 New developments must be submitted by May 1st, at the latest, for the following season. The first year new developments can only be approved provisionally for the following season and must be finally confirmed prior to the subsequent competition season.

222.5 The Committee for Competition Equipment publishes equipment by-laws after approval by the FIS Council (definitions or descriptions of the equipment items which are allowed).
In principle unnatural or artificial aids which modify the performance of the competitors and/or constitute a technical correction of the individual's physical predisposition to a defective performance, as well as competition equipment which impact the health of the competitors or increase the risk of accidents are to be excluded.

222.6 Controls

Before and during the competition season or on submission of protests to the Technical Delegate at the competition concerned, various controls can be carried out by members of the Committee for Competition Equipment or official FIS Equipment Controllers. Should there be a well-founded suspicion that regulations were violated, the equipment items must be confiscated immediately by the controllers or Technical Delegates in the presence of witnesses and be forwarded sealed to the FIS, which will submit the items to a final control by an officially recognised institution. In cases of protest against items of the competition equipment, the losing party will bear the investigation costs.
No testing of equipment or material in independent laboratories may be requested at races where a FIS Technical Expert has performed the controls, unless it can be demonstrated that the controls have not been carried out according to the rules.

222.6.1 At all FIS events where official FIS measurement experts using the official FIS measurement tools are appointed, the result of measurements carried out at the time are valid and final, irrespective of previous measurements.

223 Sanctions

223.1 General Conditions

223.1.1 *An offence for which a sanction may apply and a penalty be imposed is defined as conduct that:*
- is in violation or non-observance of competition rules, or
- constitutes non-compliance with directives of the jury or individual members of the jury in accordance with 224.2 or
- constitutes unsportsmanlike behaviour

223.1.2 *The following conduct shall also be considered an offence:*
-attempting to commit an offence
-causing or facilitating others to commit an offence
-counselling others to commit an offence

223.1.3 *In determining whether conduct constitutes an offence consideration should be given to:*
-whether the conduct was intentional or unintentional,
-whether the conduct arose from circumstances of an emergency

223.1.4 All FIS affiliated associations, including their members registered for accreditation, shall accept and acknowledge these rules and sanctions imposed, subject only to the right to appeal pursuant to the FIS Statutes and ICR.

223.2 Applicability

223.2.1 *Persons*
These sanctions apply to:
- all persons who are registered with or accredited by the FIS or the organiser of an event published in the FIS calendar (an event) both within and out with the confines of the competition area and any location connected with the competition, and
- all persons who are not accredited, within the confines of the competition area

223.3 Penalties

223.3.1 *The commission of an offence may subject a person to the following penalties:*
- Reprimand - written or verbal
- Withdrawal of accreditation
- Denial of accreditation
- Monetary fine not more than CHF 100’000.--
- A time penalty

223.3.1.1 FIS-affiliated associations are liable to the FIS for the payment of any fines and incurred administrative expenses imposed on persons whose registration or accreditation they arranged.

223.3.1.2 Persons not subject 223.3.1.1 also are liable to the FIS for fines and incurred administrative expenses. If such persons do not pay these fines, they shall be subject to a withdrawal of any permission to apply for accreditation to FIS events for a period of one year.

223.3.1.3 Payment of fines is due within 8 (eight) days following their imposition.

223.3.2 *All competing competitors may be subject to the following additional penalties:*

- Disqualification
- Impairment of their starting position
- Forfeiture of prizes and benefits in favour of the organiser
- Suspension from FIS events

223.3.3 A competitor shall only be disqualified if his mistake would result in an advantage for him with regard to the end result, unless the Rules state otherwise in an individual case.

223.4 A jury may impose the penalties provided in 223.3.1 and 223.3.2, however they may not impose a monetary fine of more than CHF 5'000.-- or suspend a competitor beyond the FIS event at which the offence occurred.

223.5 The following Penalty decisions may be given verbally:

- reprimands
- the withdrawal of accreditation for the current event from persons who had not been registered with the organiser through their National Associations
- the withdrawal of the accreditation for the current event from FIS-accredited persons
- the denial of accreditation to the current event from persons who are within the confines of the competition area or any other location connected with the competition.

223.6 The following Penalty decisions shall be in writing:

- monetary fines
- disqualification
- impaired starting position
- competition suspensions
- withdrawal of accreditation from persons who had been registered through their National Association
- withdrawal of accreditation of FIS accredited persons

223.7 Written Penalty decisions must be sent to the offender (if it is not a competitor), the offender's National Association and the Secretary General of FIS.

223.8 Any disqualification shall be recorded in the Referee's and/or the TD`s Report.

223.9 All penalties shall be recorded in the TD's Report.

224 Procedural Guidelines

224.1 Competence of Jury

The Jury at the event has the right to impose sanctions according to the above rules by majority vote. In the case of a tie, the chairman of the Jury has the deciding vote.

224.2 Within the location, especially during the training and the competition period, each voting Jury member is authorised to issue oral reprimands and withdraw the accreditation which is issued for the current event.

224.3 Collective Offences

If several persons commit the same offence at the same time and under the same circumstances, the Jury's decision as to one offender may be considered binding upon all offenders. The written decision shall include the names of all of-

fenders concerned, and the scope of the penalty to be assessed upon each of them. The decision will be delivered to each offender.

224.4 **Limitation**

A person shall not be sanctioned if proceedings to invoke such sanction have not been commenced against that person within 72 hours following the offence.

224.5 Each person who is a witness to an alleged offence is required to testify at any hearing called by the Jury, and the Jury is required to consider all relevant evidence.

224.6 The Jury may confiscate objects that are suspected of being used in violation of equipment guidelines.

224.7 Prior to the imposition of a penalty (except in cases of reprimands and withdrawal of accreditation according to 223.5 and 224.2), the person accused of an offence shall be given the opportunity to present a defence at a hearing, orally or in writing.

224.8 **All Jury decisions shall be recorded in writing and shall include:**

224.8.1 The offence alleged to have been committed

224.8.2 The evidence of the offence

224.8.3 The rule (s) or Jury directives that have been violated

224.8.4 The penalty imposed.

224.9 The penalty shall be appropriate to the offence. The scope of any penalty imposed by the Jury must consider any mitigating and aggravating circumstances.

224.10 **Remedies**

224.10.1 Except as provided for in 224.11, a penalty decision of the Jury may be appealed in accordance with the provisions in the ICR.

224.10.2 If an appeal is not filed within the deadline established in the ICR, the penalty decision of the Jury becomes final.

224.11 **The following decisions of the Jury are not subject to appeal:**

224.11.1 Oral penalties imposed under 223.5 and 224.2

224.11.2 Monetary fines less than CHF 1'000.-- (One Thousand Swiss Francs) for single offence and a further CHF 2'500.-- for repeated offences by the same person.

224.12 In all remaining cases, appeals are to be directed to the Appeals Commission, as per the ICR.

224.13 The Jury shall have the right to submit to the Appeals Commission recommendations for penalties in excess of monetary fines of CHF 5'000.- and suspensions beyond the event in which the offence occurred (223.4).

224.14 FIS Council shall have the right to submit to the Appeals Commission comments with respect to any written penalty decisions by the Jury.

224.15 **Costs of Proceedings**

Fees and cash expenses, including travel expenses (costs of the proceedings) are to be calculated comparable to costs paid to TD's and are to be paid by the offender. In the case of a reversal of Jury decisions, in whole or in part, the FIS covers all costs.

224.16 **Enforcement of Monetary Fines**

224.16.1 The FIS oversees the enforcement of monetary fines and the costs of proceedings. Enforcement costs are considered costs of the proceedings.

224.16.2 Any outstanding monetary fines imposed on an offender is considered a debt of the National Association to which the offender is a member.

224.17 **Benefit Fund**

All monetary fines are paid into the FIS Youth Promotion Fund.

224.18 These rules are not applicable to any violation of FIS Doping rules.

225 **Appeals Commission**

225.1 **Appointments**

225.1.1 The FIS Council shall appoint from the Discipline Sub-committee for Rules (or Discipline Committee if there is no Rules Sub-Committee) a Chairman and a Vice Chairman of the Appeals Commission. The Vice Chairman shall preside when the Chairman is either unavailable or is disqualified for bias and prejudice.

225.1.2 The Chairman shall appoint 3 members, which may include himself, to the Appeals Commission from the Discipline Rules Sub-Committee or Discipline Committee for each case appealed or submitted to be heard, whose decisions shall be by majority vote.

225.1.3 To avoid either actual bias and prejudice or the appearance of bias and prejudice, members appointed to an Appeals Commission shall not be members of the same National Association as the offender whose case is under appeal. In addition, members appointed to an Appeals Commission must report voluntarily to the Chairman any bias and prejudice they may hold for or against the offender. Persons who are biased and prejudiced shall be disqualified from serving on the Appeals Commission by the Chairman or, in the event the Chairman is disqualified, by the Vice Chairman.

225.2 **Responsibility**

225.2.1 The Appeals Commission shall only hold hearings with respect to appeals by offenders or by the FIS Council from decisions of competition juries, or matters referred to it by competition juries recommending penalties in excess of those provided for in the Sanction rules.

225.3 **Procedures**

225.3.1 The Appeal must be decided within 72 hours of receipt of the Appeal by the Chairman, unless all parties involved in the Appeal agree in writing to an extension of time for the hearing.

225.3.2 All appeals and responses must be submitted in writing, including any evidence the parties intend to offer in support of or in response to the Appeal.

225.3.3 The Appeals Commission shall decide on the location and format for the Appeal (phone conference, in person, e-mail exchanges).
The Appeals Commission members are required to respect the confidentiality of the appeal until the decision is made public and to consult only with the other members of the panel during the deliberations.
The Chairman of the Appeals Commission may request additional evidence from any of the parties involved, providing this does not require disproportionate means.

225.3.4 The Appeals Commission shall allocate costs of the appeal pursuant to 224.15.

225.3.5 Decisions of the Appeals Commission may be announced orally at the conclusion of the deliberations or hearing should one take place. The decision, together with its reasoning, shall be submitted in writing to the FIS, which shall deliver them to the parties involved, their National Associations and all members of the Jury whose decision was appealed. In addition, the written decision shall be available at the FIS Office.

225.4 Further Appeals

225.4.1 Decisions of the Appeals Commission may be appealed to the FIS Court in accordance with Article 52; 52.1 and 52.2 of the Statutes.

225.4.2 Appeals to the FIS Court shall be in writing and submitted to the FIS Secretary-General in accordance with the time limits prescribed in Article 52; 52.1 and 52.2 of the Statutes from the date of the publication of the Appeals Commission decision.

225.4.3 An Appeal to the Appeals Commission or to the FIS Court will not delay the implementation of any penalty decision of the Competition Jury, Appeals Commission or Council.

226 Violation of Sanctions

Where there is a violation of a sanction that has been imposed (according to ICR 223 or the FIS Anti-Doping Rules, the Council may impose such further and other sanctions that it considers appropriate.
In such cases, some or all of the following sanctions may apply:

226.1 Sanctions against individuals involved:

- a written reprimand;

and/or

- a monetary fine not to exceed the sum of CHF 100'000.--

and/or

- competition suspension at the next level of sanction - for example if a three month suspension for a doping offence was imposed, a violation of the suspension will cause a two year suspension; if a two year suspension for a doping offence was imposed, a violation of the suspension will cause a lifetime suspension;

and/or

- withdrawal of accreditation from individuals involved.

226.2 Sanctions against a National Ski Association:

- withdrawal of FIS funding to the National Ski Association;

and/or

- cancellation of future FIS events in the country involved;

and/or

- withdrawal of some or all FIS membership rights, including participation in all FIS calendar competitions, voting rights at the FIS Congress, membership of FIS Committees.

2nd Section

3000 Organisation

3010 The Organiser

The Organiser of an international ski competition is the person or group of persons who make the necessary preparations and directly carry out the running of the competition in the resort.

3010.1 If the National Ski Association itself is not the competition Organiser, it may appoint an affiliated club to be the Organiser.

3011 Organiser's Contract

3011.1 Competition organiser appointed

In the event that the National Ski Association appoints a competition organiser, it shall do so by means of a contract in the form satisfactory to the FIS.

3011.2 No Competition Organiser appointed

In the event that the National Ski Association does not appoint a competition Organiser, it shall execute a contract with the FIS.

3012 Organising Committee

3012.1 Composition

The Organising Committee consists of those members (physical or legal) who are delegated by the Organiser and by the International Ski Federation. It carries the rights, duties and obligations of the Organiser.

3012.2 The Organising Committee must assume all responsibility for ensuring that the details involved in hosting a FIS authorized competition are properly controlled. Efficient communications with all individuals and participating associations are essential to a well-planned competition.

3012.3 The Organising Committee should provide a service to all participants and guests, which provides information and material regarding accommodation and travel details. This information should be circulated at least three (3) months in advance to ensure availability.

3012.4 The Organising Committee is responsible for providing results in approved electronic form to the FIS Office and those countries participating in the competition immediately they are available. Only if there has been a delay may the results be made available the day after the competition. The communication of results on the same day is the responsibility of the representatives from each country.

3012.5 Appointments by the International Ski Federation

FIS appoints the Technical Delegate (TD) and if required, the Race Director (RD) for all competitions. (see 3030.1)

3012.5.1 The Judges for a competition will be a group of qualified individuals. For international competitions, the FIS Freestyle Committee will appoint the panel of judges.

3012.5.2 The Head Judge will be appointed by the FIS Freestyle Committee.

3012.5.3 By these appointments the officials mentioned above become members of the organising committee.

3013 Basic Costs of the Organising Committee

3013.1 The Organising Committee must pay the calendar fees of the competition according to the regulations in the FIS Calendar.

3013.2 The Organising Committee must compensate the Judges/TD according to the current policy of the FIS.

3013.3 Officials' Expenses

The TD's and Judges* have a right to reimbursement for their travel expenses up to a maximum of CHF 600.--[1)] (highway taxes included) as well as free accommodation and meals during the assignment. This rule also applies to inspections as well as the trip to the competition (train, first class; for longer distance air fare, tourist class; or car per kilometer, CHF 0.70 or equivalent).
In addition a fixed daily rate of CHF 100.--* is added for the travel days to and from, as well as each day of the assignment, which includes postage charges for mailing reports, etc. Double charges (e.g. travelling home on the same day as the last competition) are not permitted. Overnight accommodation during the journey to and from the assignment if necessary, must be justified and reimbursed separately.

[1)] The maximum payment of CHF 600.-- is valid for all races except Olympic Winter Games, World Championships, World Cup and Continental Cup.

* This rule applies to all jury members at the Olympic Winter Games and FIS World Championships

3013.4 The Organising Committee must provide accommodation in accordance with the current policies of the FIS Freestyle Committee.

3013.5 The Organising Committee must provide lift tickets for training and competition in accordance with the current policies of the FIS Freestyle Committee.

3020 The Competition Committee & Competition Officials

3020.1 The Competition Committee

3020.1.1 *Appointments by the Organiser*

The organiser appoints all other members of the organising committee. The chairman (or their representative) represents the committee in public, leads the meetings and makes decisions concerning all matters that are not made by other persons or groups. Before, during and after the competition they work closely with the International Ski Federation and their appointed officials. They take on all other duties that are necessary for carrying out the competition.

- The Chief of Competition;
- The Referee;
- The Chief(s) of Course;
- The Course Designer;
- The Chief of Inrun and Chief of Jumps;
- The Chief of Maintenance;
- The Chief of Course Equipment;
- The Chief of Gate Judges;
- The Gate Judges;
- The Chief of Timing;
- The Chief of Scoring;
- The Finish Officials;
- The Competition Secretary;
- The Bib Coordinator;
- The Chief Steward;
- The Chief of Press;
- The Chief of Sound and DJ;
- The Chief of Medical and Rescue Services;
- The First Aid and Medical Service;

3020.1.2 *Role of the Competition Committee*

The Competition Committee is responsible for all technical matters, including the selection and preparation of the courses.

The Competition Committee appoints all additional officials not already designated by the Organising Committee.

3020.2 Competition Officials

The TD, appointed by the FIS as per 3030.1, may not be an organiser (except at national or regional level) but, as a member of the Jury, is a member of the organising committee.

The Organiser appoints the following officials. The most important officials and their duties are set out below:

3020.2.1 *The Chief of Competition*

The Chief of Competition directs and controls the work of all officials, summons the meetings of the Competition Committee for consideration on technical questions and generally acts as chairman of the Team Captains' Meetings after consultation with the TD and the Referee (if appointed). The Chief of Competition is also a member of the Jury.

3020.2.2 *The Referee*

The Referee will record the reports from the Chief of Gate Judges about infractions of the rules and gate faults at the end of each heat and at the end of the

competition - checking, signing and posting referee minutes immediately after each phase on the official notice board.

The referees minutes shall include, a list with the names of the competitors disqualified, the gate numbers where the faults occurred, the names of the gate Judges who noted the faults leading to the disqualifications and the exact time the disqualifications were posted.

Sending a report to the FIS in special cases or in the event of a difference of opinion among the Jury members or in the case of severe injury to a competitor

3020.2.3 *The Chief of Course*
The Chief of Course is responsible for the preparation of the courses in accordance with the decisions of the Competition Committee and the Jury. They must be familiar with the local snow conditions on the terrain concerned.

3020.2.4 *The Course Designer*
Based upon the characteristics of the course and the Freestyle Course Specifications the Course Designer shall develop a plan and work schedule for the development of the course.

3020.2.5 *The Chief of Inrun and Chief of Jumps*
The Chief of Inrun and Chief of Jumps are assistants to the Chief of Course for Aerials. These officials prepare and maintain the different Aerials jumps and associated transitions and inruns.

3020.2.6 *The Chief of Maintenance*
The Chief of Maintenance is responsible for controlling the work of side slippers and other course crew during competition and training in order to provide for the preparation of the slope.

3020.2.7 *The Chief of Course Equipment*
The Chief of Course Equipment is responsible for the provision of all equipment required for the preparation and maintenance of the courses.

3020.2.8 *The Chief of Gate Judges*
The Chief of Gate Judges is responsible for all the gate judges and for conveying necessary information to the jury.

3020.2.9 *The Gate Judges*
A Ski Cross Competition must have a minimum of 4 and a maximum of 8 Gate Judges placed appropriately on the entire length of the course so as to provide for a full visual reference of all gates and features to those Gate Judges. All Gate Judges must be able to communicate by radio to the Referee as well as the Chief of Gate Judges. All Gate Judges must be familiar with the rules governing a Ski Cross Competition and in particular those rules governing DSQ and Contact. A Gate Judge may be responsible for the supervision of one or more gates.
A Gate Judge must observe accurately whether the passage of the competitor was correct through their area of observation and immediately report both in writing and by radio any gate faults or breaches of the rules.

3020.2.10 *The Chief of Timing*
The Chief of Timing is responsible for the co-ordination of officials at the Start and Finish, including timing equipment. The following officials are under his direction:

- Starter; (see 3042.1)
- Assistant Starter; (see 3042.2)
- Chief Timekeeper; (see 3042.3)
- Assistant Timekeeper.

3020.2.11 *The Chief of Scoring*

The Chief of Scoring is responsible for the verification of all scoring calculations during the competition. They must have a thorough working knowledge of all the rules concerning the calculation of competition results.

3020.2.12 *The Finish Officials*

The Finish Officials in the Moguls and Dual Mogulsare responsible for checking that all jumps are landed in the course (A jump is landed in the course if the center of the skis is on the ground before the competitor crosses the line). In Ski Cross, they determine the finish order of the competitors.
The Finish Official assists the Jury with, DNS, DNF and DSQ rulings.

3020.2.13 *The Competition Secretary*

The Competition Secretary is responsible for all secretarial work for all aspects of the competition. They must ensure that the official results contain the information required by 3045. They are responsible for the minutes of the Competition Committee, Jury and Team Captains' meetings. They must ensure that all forms for start, judging, timing, calculation and protests are properly prepared and delivered in good order at the proper time. They must ensure that results are duplicated and distributed properly immediately following the competition (see 3012.4).

3020.2.14 *The Bib Coordinator*

The Bib Coordinator is responsible for the preparation, assignment, distribution and collection of all bibs provided to the competitors'- and officials.

3020.2.15 *The Chief Steward*

The Chief Steward is responsible for ensuring that spectators are kept off all parts of the course. Sufficient personnel must be used according to an exact plan. Ropes or fences should be erected in due time. There should be sufficient space behind these barriers to permit free circulation of the spectators.

3020.2.16 *The Chief of Press*

The Chief of Press is responsible for all arrangements for journalists, photographers, television and radio reporters.

3020.2.17 *The Chief of Sound and DJ*

The Chief of Sound and DJ is responsible for the provision and operation of sound installations.

3020.2.18 *The Chief of Medical and Rescue Services*

The Chief of Medical and Rescue Services is responsible for organising adequate first aid and medical coverage during the official training periods and the actual competition.
They must arrange an appropriate facility to which injured competitors should be taken and treated.
The Race Doctor coordinates plans with the Team Doctors before the start of the official training. During training and the competitions they must be in telephone or radio communication with their assistants. They must co-ordinate plans with the Chief of Competition before the start of the official training.

A Doctor, who should be a good skier, should be ready at the start to deal with any eventuality and has to stay in contact with the Jury and the members of the Rescue Service. This task can be delegated to a team doctor. Details of the Medical Support Requirements are given in Chapter 1 of the FIS Medical Guide (containing the Medical Rules and Guidelines).

3020.2.19 *First Aid and Medical Service*

The first aid and medical services must be completely operational during all training times. Details of the Medical Support Requirements are given in Chapter 1 of the FIS Medical Guide (containing the Medical Rules and Guidelines).

3020.2.20 *The Start Referee*

The Start Referee must remain at the Start from the beginning of the official inspection time until the end of a training / competition.

- Ensures that the regulations for the start and the start organisation are properly observed.
- Determines late and false starts.
- Communicates immediately with the Jury at all times.
- Reports to the referee the names of the competitors who did not start and informs the Jury of all infringements against the rules, such as false or delayed starts or violations against the rules for equipment.
- Ensures that reserve bibs are at the start.

3020.2.21 *The Finish Referee*

The Finish Referee must remain at the finish from the beginning of the official inspection time until the end of a training/competition and throughout the training and the competition.

- Ensures that all the regulations for the organisation of the finish and the inrun to the finish or landing hill and out-run/finish area are properly observed.
- Supervises the Finish officials, the timing and the crowd control in the Finish area.
- Must be able to communicate immediately with the Jury at all times.
- Reports to the Referee the names of the competitors who did not finish and informs the Jury of all infringements against the rules.

3030 The FIS Technical Delegate (TD)

3030.1 Appointment

For all international competitions, the FIS Freestyle Committee shall appoint the FIS TD according to the recommendations of the respective working groups. For national competitions, the National Ski Association may appoint the TD.
The appointments must be decided 60 days before each competition and made known to the TDs concerned, the Organisers of the competition and the TD's National Ski Association.

3030.2 Technical Delegate Qualifications

3030.2.1 A TD may not undertake another role on the Organising Committee, except at national or regional competitions.

3030.2.2 For World Ski Championships, Olympic Winter Games, World Cups and any other championship competition a qualified TD must be used.

3030.3 Replacement of the Technical Delegate

In all cases where a replacement is made, a full report must be made and forwarded to the FIS Bureau, the FIS Freestyle Committee, the Organising Commit-

tee of the competition concerned and the designated FIS Freestyle Representative.

3030.3.1 *Before the Competition*

For World Championships and Olympic Games
The FIS Council must appoint a replacement from among the qualified people present. The Organising Committee of the competition, the FIS Bureau and the FIS Freestyle Committee must be informed.

For all other International and Continental Competitions
The FIS Office is responsible for the immediate appointment of a licensed substitute. The Organising Committee of the competition, the FIS Bureau and other affected parties must be informed.

3030.3.2 *During the Competition*

For World Championships and Olympic Winter Games
The FIS Council as well as the National Association from which the TD comes must appoint a replacement.

For all other International and Continental Competitions
The designated Freestyle representative has the power to appoint a replacement. This should be done after consultation with the FIS Office.

For an international competition, a TD capable of assuring the start and continuation of the competition can be appointed even though they do not meet all the conditions of article 3030.2. Provided that this criterion is met, the most highly qualified available substitute should be appointed.

3030.4 Duties of the Technical Delegate in the Jury

3030.4.1 The TD acts as technical consultant to the Jury.

3030.5 Duties of the Technical Delegate before the Competition

3030.5.1 The TD must inspect official and reserve courses just prior to the start of official training.

3030.5.2 The inspection should cover the following:

- The technical data of the courses in accordance with the FIS Freestyle Course Standards Manual.
- Preparation of the terrain of all courses and arrangements for all necessary and proper measures (width of courses etc.) in accordance with 4002, 4201, 4202, 4302, 4502, 4602 and in the FIS Freestyle Course Specifications.
- Influence of weather during the winter on the courses.
- Choice and preparation of the Start and Finish areas for the different courses (see 3043 - 3044).
- Means of transporting the competitors to the Start.
- Communications between Start and Finish.
- Medical service during and after the competitions.

3030.5.3 It is the duty of the TD to be ready to advise the organizers, when necessary.

3030.5.4 The Organisers must keep the TD informed of the progress of technical preparations. The contact between the Organisers and the Technical Delegate is useful and should be continuous.

3030.5.5 The TD must arrive at the location of the competition at least 24 hours before the beginning of the official training.

3030.5.6 The TD must read the report of the TD of the preceding competition.

3030.5.7 The TD must check to see that the proposals of the FIS Freestyle Committee or the Homologation Inspector have been carried out.

3030.5.8 The TD is responsible for the review of the Technical Delegate's reports from previous competitions on the same site.

3030.5.9 The TD will review the list, furnished by the Organising Committee, of supplies and service personnel.

3030.5.10 The TD has to spot-check the competitors' licences.

3030.6 Duties of the Technical Delegate during Training and Competition

3030.6.1 Observation of the training, the work of the Organising Committee and the competition officials.

3030.6.2 Attendance at all meetings of the Jury and of the Team Captains;

3030.6.3 Supervision of the technical conduct of the competition.

3030.6.4 Immediately after the competition approve the results and prepare the FIS point calculation according to the Rules for Freestyle FIS Points (section 4)

3030.7 TD Report

The online TD report has to be transmitted immediately after the event and check if the results on the website are correct.

3030.7.1 The TD will make a report on the TD candidates' technical capabilities. This report must be sent to FIS Office and the responsible person in the candidate's National Ski Association.

3030.8 Rights of the Technical Delegate

3030.8.1 Chairman of the Jury, with the deciding vote in case of a tie.

3030.8.2 Decisions according to 3030.5.

3030.8.3 If necessary, the TD may appoint qualified persons as members of the Jury.

3030.8.4 Reimbursement of travel expenses and all costs arising out of their duties at the inspections and competitions, as per the current policy of the FIS (see 3013.3).

3030.8.5 Complete briefing by the Organising Committee through punctual dispatch of all documents on the conduct of the competitions, such as the official invitation, program, bulletins, etc. as well as immediate information concerning the cancellation or postponement of a competition.

3030.8.6 To request the support of the Organising Committee and its officials in all matters concerning the fulfillment of his duties.

3030.9 Candidate Technical Delegates (Assistant TD)

3030.9.1 Every National Ski Association has the right to nominate to the FIS Office the names of their TD Candidates. Only one TD Candidate may be assigned to each competition.

3030.9.2 The assignment of the TD Candidates is the responsibility of the FIS Office.

3030.9.3 The cost of the assignment has to be covered by the TD Candidates themselves.

3030.9.4 The Technical Delegate will make a report on the TD Candidate's technical capabilities. This report must be sent to the FIS Office and the responsible person in the Candidate's National Ski Association.

3030.9.5 The TD Candidate has to make a report on the competition in question, which must be sent to the FIS Office and the responsible person in his National Ski Association.

3032 Jury

3032.1 Composition

The Jury consists of the following members who are members of the Organising Committee:
- TD appointed by FIS
- Head Judge / Referee (SX) - appointed by FIS for major competitions
- Chief of Competition - appointed by the Organiser

Each Jury member has one vote with the Chairman having the deciding vote.
At the Winter Universiade the FISU Race Director, as approved by FIS, has a voting right as a member of the Jury.

Members of the Jury must be from different countries as follows:

3 different countries	**2 different countries**
Olympic Winter Games	Continental Cups
World Cup	FIS International competitions
World Championships	
Junior Championships	

Advisory Committees as per 3034 will act in an advisory capacity to the Jury, but will not have a vote.

3032.1.1 The voting members of the Jury must be positioned on the course at all times and be in communication with one another.

3032.1.2 The Jury has the right to cancel, interrupt or postpone a competition in any case where to continue could, in the Jury’s estimation, be inadvisable on grounds of safety or fairness.
Causes for cancellation shall include but not be limited to:
- Insufficient snow on and beside the course;
- Inadequate or uneven preparation of the snow surface on the course;
- Insufficient protective measures;
- Deficient or insufficient organisation of the medical, rescue and first aid service;
- Insufficient organisation of crowd control;
- Unacceptable weather conditions;

- Extreme cold: if the temperature measured at the Start falls below -20°C, the Jury must meet to consider delaying training or competition until the temperature rises to -20°C or above, or cancelling the competition if it judges that a rise to an acceptable temperature is unlikely. The decision to interrupt a competition may be final or temporary. See rule 3060.2.4.

3032.1.3 The Jury examines, evaluates and takes the necessary decisions on protests. Minutes must be taken of such discussions.

3032.1.4 The Jury has the right to grant a provisional re-run.

3032.1.5 The Jury has the right to determine the maximum Degree of Difficulty or choose to limit the number of somersaults performed in an Aerials competition based upon the guidelines of the FIS Freestyle Committee, which limits the competition to either double flips with multiple twists or triple flips with a single twist.

The Jury has the choice to limit the Men's Aerials competition to either 3.55 or 4.175 degree of difficulty. The Jury can limit the Ladies' Aerials competition to 3.55 degree of difficulty.

3032.1.6 The Jury has the right to determine the choice of competition format for the Ski Halfpipe. The Jury will determine the number of heats, and whether a Semi-Final is to be run, based on available time and number of entries.

3032.1.7 Written minutes are to be kept of all meetings and decisions of the Jury and signed by each individual member of the Jury, with each individual vote on decisions recorded. They must be verified by the Chairman of the Jury and written in at least one official language of the FIS.

3032.1.8 A member of the Jury should periodically inspect the course during the competition.

3033 The Judges

3033.1 Appointment of Judges

The Judges for a competition will be a group of qualified individuals. For international competitions, the FIS Freestyle Committee or authorized groups will appoint the panel of judges. For Ski Halfpipe and Ski Slopestyle appropriately qualified FIS Snowboard Judges may be appointed.

Judges may not be assigned to events in which a family member is participating (grandparents, parents, children, brother, sister, husband, wife)

3033.1.1 Number of Judges:

A - Level competitions:	1 Head Judge + 5 to 7 scoring Judges
At all other competitions:	1 Head Judge + 5 scoring Judges

In special cases, fewer judges can be scheduled.

3033.2 Number of Judges per country

At Olympic Winter Games and World Championships
- maximum 1 (one) per country

At World Cup and Junior World Championships
- maximum 2 (two) scoring per country. (1) one other from the same country can be the Head Judge in a non-scoring position.

At Continental Cups
- at least 2 (two) countries represented on scoring panel.

At other FIS competitions
- any FIS Licensed judge

3033.3 The Head Judge will be appointed by the FIS Freestyle Committee or authorised groups.

3033.4 An alternate for the Head Judge and for a member of the judges' panel should be named and available if for any reason an individual is unable to perform his duties.

3033.5 The Rights and Duties of the Head Judge

3033.5.1 The Head Judge is a member of the Jury.

3033.5.2 The Head Judge is preferably a non-judging member of the judging panel, responsible for checking the accuracy of the judges' decisions, checking the scoring results with the Chief of Scoring and policing the judges' stand.

3033.5.3 The Head Judge may act as a substitute judge.

3033.5.4 The Head Judge shall ensure that all arrangements for transportation, accommodation and expenses are organised for each judge. The responsibility for all communications, scheduling, timetables, materials, clinics, attendance, sundry preparations and any detail concerning the judges rests with the Head Judge. Thus, the Head Judge shall accept all responsibility for any irregularity in the service provided by the judges to the competition.

3033.5.5 The head judge shall schedule a post competition review meeting within one hour of the completion of the competition. The timing and location to be announced at the Team Captains Meeting.

3033.6 Judging Procedures

3033.6.1 Each judge shall use scorecards, which indicate who the judge is and the name and bib number of the competitor. All scorecards will indicate a score for each category utilised to assign a final score.

3033.6.2 Judges shall be separated on the judges' stand by a minimum of one meter and a partition. There shall be no discussion between the judges concerning the competitors' scores (except by the Head Judge).

3033.6.3 No competitor, team official or spectator will be allowed to approach the judges' stand and talk to the judges during competition.

3033.6.4 The Jury must deal with any problems or disputes arising from the judges or with the judging. The Jury may refer any problem that it cannot resolve to the FIS Freestyle Committee.

3034 Advisory Committees, Technical Advisor, Course Advisor, Video Controller, Connection Coach and Jump Shapers

Every FIS authorized international competition shall have Advisory Committees formed prior to the start of competition to advise the Jury.

3034.1 Competitors' Advisory Committees

For each event in every competition there shall be a separate Competitors' Advisory Committee, consisting of:

- The Chief of Course
- Two competitors' representatives (one lady and one man)

3034.2 The Connection Coach

For each event in every competition, one coach shall be appointed as a Connection Coach at the Team Captains' Meeting.
The coach and competitors' representatives may not be from the host nation.

3034.3 Role of Advisory Committee in the Competition

3034.3.1 The Competitors and Coach groups should inform the Jury or the FIS Freestyle Coordinator of its chosen representatives for the Advisory Committees in due time; if none are identified, they will be appointed at the Team Captains' Meeting.

3034.3.2 The members of the Advisory Committees report in an advisory manner directly to the Jury and are non-voting members of the Jury.

3034.3.3 The Advisory Committees shall monitor and provide input into all aspects of the competition pertaining to their participation.

3034.4 Jump and Air Bump Shapers

3034.4.1 For the express purpose of shaping and grooming the jumps in Aerials and the air bumps in Moguls and Dual Moguls, the Team Captains shall elect up to 2 shapers per special type of jump (i.e.: Air Bumps, the Large Kickers, the Small Kickers). These individuals will be responsible for the final preparation of the jumps and air bumps. In competitions other than World Cups, alternate jump preparation arrangements can be determined at the Team Captains' meeting.

3034.4.2 These individuals must be prepared to perform this task at least one day prior to Official Training.

3034.5 The Technical Advisor
To support the Jury, FIS can appoint technical advisors for all categories of competitions.
The technical advisor has the right to express his opinion within the Jury - without the right to vote.

3034.6 The Course Advisor
To support the Jury, FIS can appoint course advisors for all categories of competitions.
The course advisor has the right to express his opinion within the Jury - without the right to vote.

3034.7 Video Controller

When the organiser has the technical installation for an official video control, the Jury will appoint an official video controller. The duties of the Video Controller are to observe the competitors' passage on the course. For ski cross, the jury can make final decisions about disqualifications / sanctions solely based on the recommendations of the official video controller.

3035 Team Captains

Each nation is responsible for providing one Team Captain.
If possible, the Team Captain should not be a competitor.
A Team Captain cannot undertake any other official organising function (Jury, TD, etc.) at the competition.

3035.1 Rights and Obligations of a Team Captain

3035.1.1 To submit protests to the Jury during the competition.

3035.1.2 To benefit from all advantages accorded to a competitor (lifts, accommodations, invitations, etc.).

3035.1.3 To enter into competition areas during training time.

3035.1.4 To enter all official ceremonies.

3035.1.5 Each Team Captain has one vote.

3035.1.6 To enter the preparation area during the competition.

3035.2 Duties of a Team Captain

3035.2.1 To attend all Team Captains' meetings.

3035.2.2 To provide all information received at meetings to his team members.

3035.2.3 To provide Aerials qualifications of his team members if requested by the Jury.

3035.2.4 Responsible for all registrations of their team.

3035.2.5 Responsible for the discipline of their team.

3035.2.6 To be familiar with the competition rules.

3035.2.7 To be appointed to monitor and advise on the development of air bumps on Moguls courses and the shape of the Aerials Jumps. These trainers will be appointed at the Team Captains' meeting.

3036 Team Medical and Service Personnel

The following are quotas for the right of access to the competition areas:

- Up to 3 competitors:	1 Trainer	1 Doctor	1 Technician
- 4 to 8 competitors:	2 Trainers	1 Doctor	2 Technicians
- 9 or more competitors:	3 Trainers	2 Doctors	3 Technicians

3037 Competitors' Equipment

The FIS Specifications for Competition Equipment and Commercial Markings contain the Rules for Competitors Equipment.

3037.1 **Bibs**

The shape and size of start numbers may not be changed on penalty of disqualification. All bibs must be worn correctly at all times during official training, competition and prize giving.

3037.2 **Advertising**

Advertising on material and equipment which is worn during competitions and training must conform to the FIS guidelines in Rule 206, 207 and 222.

3037.3 **Equipment**

Basic Rules concerning competitors' equipment which are specific to the individual competitions can be found in section 4008.2 for Aerials; section 4206.1 for Moguls, 4306.1 for Dual Moguls 4511 for Ski Cross and 4606 for Ski Halfpipe. Further definitions can be found in the FIS Equipment Rules, see Section E.

3041 **Technical Installations**

3041.1 **Communications / Internet Connection**

For all international competitions, there must be direct communication (telephone or radio, etc.) between the Start, judges' stand and in the case of Ski Cross, Moguls and Dual Moguls, the Finish. In Olympic Winter Games, the communications must be assured by fixed wiring. In the data service area, access to the internet (at least ADSL speed) is required for World Cup, World Championships and Olympic Winter Games competitions.

3041.2 **Timing Equipment**

3041.2.1 *Electric Timing*

For all international competitions electric timing with communication between Start and Finish must be used, which will allow measurement of the times to 100ths of a second. 1000th of a second, even when measured and recorded, may not be published or used in the event of competitors being tied in the 1/100's of a second.

3041.2.2 *Height of Timing Cells*

The photoelectric cells will be placed at a height of 1.0 meter for the starting light beam or at approximately 0.50 meters on the starting gates. The starting installation must be placed in such a way that starting is impossible without it opening. The finish beam on the Moguls and Dual Moguls course should be at 1.0 meter high and the auxiliary finish beam at 0.75 meters.

3041.2.3 *Independent Systems for Major Competitions*

At World Ski Championships and Olympic Winter Games two independently functioning electric timing devices must be installed.

3041.2.4 *Ski Cross Reaction Time*

For the ski cross qualification and final, a reaction time will be measured and displayed at the start. The time will be measured from when the start gate is opened until a point 10 meters from the start gate. The reaction time will be measured and displayed to the nearest 1/100ths of a second. This is required for World Cups, World Championships and Olympic Winter Games.

3041.2.5 *Timing in Dual Moguls*

In Dual Moguls, the timing is based upon the difference in time between the competitors as they cross the finish line. The first competitor that crosses the finish

line starts the time unit and the second competitor that crosses the finish line stops the timing unit.

3041.2.6 *Timing Systems Approval*
All timing devices must have the approval of the FIS.

3041.2.7 SX Qualification
For SX Qualification, wireless timing, maybe used for FIS, NC and COC Level Competition. Timing devices must meet FIS wireless standards that are set out in the Timing Booklet "Timing without Cable Connection between Start and Finish" and Set-Up Diagram Level 3 (without Cable)

3041.3 Hand Timing

3041.3.1 *Hand Timing as Back Up System*
A hand timing system must be used at all times during the Moguls, Dual Moguls and Ski Cross competitions, as a back up to the electric timing system. For all competitions, the hand timing must be totally separate and independent of the electric timing at the Start and Finish.

3041.3.2 *Calculation of Hand Timing*
In the event of a failure of the electric timing system, the official hand time shall be calculated in the following way:
The hand time shall be corrected by taking the average of the hand time minus the electronic time for the three runs prior to the missed electronic time and subtracting the result from the hand time: if there were not three electric times prior to the missed time, then the closest three times to the electric missed time shall be used.

3041.4 Public Address - Sound System

3041.4.1 *Music at Freestyle Competitions*
Music will be used in all competitions.

3041.4.2 The Chief of Sound shall be in radio contact with the competition officials at all times.

3041.4.3 The Chief of Sound and DJ is responsible for stock music during the competition.

3041.4.4 *Moguls, Dual Moguls and Ski Halfpipe*
During the Moguls, Dual Moguls and Ski Halfpipe competitions, stock music will be used and at the option of the Organisers. The music should be upbeat and energetic.

3041.4.5 *Aerials and Ski Cross*
Stock music will also be used during these competitions. A variety of exciting popular music is recommended.

3041.5 Judges' Stand
The minimum size of the judges working area must be 3.0 x 10.0 meters.
The judges viewing area should be constructed to provide ample room for the appropriate number of officials and to provide room for viewing, storage of equipment and all proper amenities for the operation of the competition. This facility should be constructed in accordance with guidelines set out by the FIS Freestyle Committee. The facility must be weather proof, heated inside and have toilet facilities available.

3041.6 **Timing and Data Area**

The minimum size of the timing and data working area is 3.0 x 4.0 meters. Tables, chairs, electrical sources and heat need to be provided. The location of the timing and data area is defined according to the specific course specifications. The facility must be weather proof, heated inside and have toilet facilities available.

3041.7 **Notice Board**

An official notice board will be located in appropriate locations on each course.

3042 **Start Officials**

3042.1 **The Starter**

The Starter is responsible for the warning signals and start command. They are responsible for start recording. They assign the supervision of the competitors to the Assistant Starter.

3042.2 **The Assistant Starter**

The Assistant Starter is responsible for calling the competitors in accordance with the starting order. They must call competitors several times during the 10 minutes before each run.

The Assistant Starter is also responsible for checking competitors' bibs, clothing and equipment for equipment violations.

3042.3 **The Chief Time Keeper**

The Chief Time Keeper is responsible for the accuracy of the timing. The times must be made available to the Competition Secretary and the Chief of Scoring for immediate publication and calculation of results. They are also responsible for recording of data. The Chief Time Keeper may select an assistant. They are responsible for the organisation and layout of the finish area, including the proper crossing of the finish line by the competitors.

3043 **The Start**

3043.1 **Preparation of Start Area**

The Start shall be prepared in such a way that the competitors can stand relaxed in the starting area.

3043.1.2 *Aerials Start Area*

The Aerials Start is anywhere on the course, but cannot exceed the maximum start line established as a precaution for the jump hill.

3043.1.3 *Moguls and Ski Cross Start Area*

The Moguls and Ski Cross Qualification Start will preferably be an open start with a light beam installed approximately 1.5 - 2.0 meters down across the hill parallel to the starting line. The starting line and the light beam will be as wide as the control gates on top of the course are set. There will be a starting line. The competitor should plant his poles in front of the line and his boots should stay behind until the starting signal is given.

The starting installation will be located where the competitor has easy access to his skiing line and can quickly reach full speed after leaving the start.

3043.1.4 *Start Device*

The Dual Moguls Start uses a start device - see 4306.4.4 for a description. The Ski Cross Start uses a start device - see 4507.8 for a description. The starting installation shall be located where the competitors have easy access to their skiing line and can quickly reach full speed after leaving the start device.

3043.2 The Start Area and Warming Tent

The Start Area must be closed off to everyone except the starting competitor, accompanied by only one trainer and the Start Officials. A special roped off area must be provided for trainers, Team Captains, service personnel, etc., in which they may take care of the waiting competitors without being interrupted by the public. A tent or a warming hut must be provided at the start area. If the temperature is expected to be below -10° Celsius, a heater must be installed in the tent or the warming hut.

3043.3 Start Procedure

No official or attendant who could possibly give an advantage to, or disturb the starting competitor, may be behind them. All outside help is forbidden.

3043.4 Start Commands

Start commands will be given by the Starter for each specific competition.

3043.4.2 *Aerials Start Command*

3043.4.2.1 The wind condition (velocity) in which the competitor is allowed to start.

3043.4.2.2 The Installation of Measuring Devices shall be controlled by the Technical Delegate in accordance with the solutions of the Freestyle Technical Specifications Manual and of 3043.4.2.3.

3043.4.2.3 Wind Velocity and Direction

The wind measuring instruments shall be placed laterally to the height of the optimal flight trajectory. The gauges recording the data shall display the actual conditions separately, not an average.

In addition to these instruments, 2 wind flags shall be placed at the side of the landing hill and on the top of the inrun.

3043.4.2.4 Start Permission and “Three Phase Start”

Start permission and starting time control at OWG, WSC and WC, competitions will be determined by means of a three-colored (red-yellow-green) signal and a digital display which are connected and run by a adjustable program.

During the red phase (start preparation), the clock does not run and is set at 15 seconds. During next yellow phase, (5 seconds) the clock starts to run down from 15 seconds and then switches after 10 seconds to the green phase.

The starting time will be finished after 15 seconds and the display then shows ‘0’. At ‘0’, the light automatically changes back to red and the starting procedure for the next competitor begins.

3043.4.2.5 It is the competitor’s responsibility to be ready at the start when his starting number is called. The competitor has to leave the start after the start signal has been given. If the competitor has not left the start by the end of the start time, the hill will automatically be closed.

3043.4.2.6 During the starting procedure, the competitor must have the opportunity to clearly observe the automatic countdown display (e.g. a programmable digital clock).

3043.4.2.7 The competitor has to start within the start time. If the start signal is interrupted during the competitor's starting period for any reason, for example unstable weather conditions, the starting process will begin again.

3043.4.3 Moguls Start Command

3043.4.3.1 The Moguls start command begins with a warning ten seconds before the start. A start command will then be given**: "Competitor Ready!** …. **3, 2, 1, Go!"** The competitor is then required to leave the start immediately.

3043.4.4 Dual Moguls Start Command

3043.4.4.1 The Dual Moguls Start command shall begin with a warning from the Announcer: **"Blue Course ready,……Red Course ready!"** The starter or gate opener shall open both gates simultaneously within 3 seconds of this announcement. Should the gates fail to open for any reason, this procedure shall be re-commenced.

3043.4.4.2 If a competitor is unable to start for any reason, the other competitor in that phase shall not ski the course.

3043.4.5 Ski Cross Start Command
"We are ready for next Heat, proceed to the Start Gate"
"Enter the Start Gate" (30 seconds before the start command)
"Skiers Ready!", then **"Attention!"** followed by the Starter opening the start gate.

3043.5 Timing System Locations

In the Moguls and Ski Cross competition the timing system shall measure the exact time when the competitor crosses the starting light beam with their leg (below the knee) or when the starting gate opens.
In the Dual Moguls competition the timing shall measure the exact time when the competitor crosses the Finish light beam.

3043.6 Delayed Start

3043.6.1 Force Majeure
A competitor who is not ready to start at their time indicated on the official start list will receive a DNS. The Starter may, however, excuse such a delay if, in his opinion, the delay is due to "force majeure". The breakdown of a competitor's personal equipment or minor sickness of a competitor does not constitute "force majeure". In case of doubt, the Starter may allow a start provisionally, but must inform the Jury.

3043.6.2 Start Order
Where a start has been delayed and the competitor is ready to go, the Starter will run the competitor at the first start opportunity and inform the Jury, Judges, Referee, Finish Official, Chief of Timing, Announcer and Chief of Scoring accordingly.

3043.7 The Start Order

The Start Order is determined at the Team Captains' meeting on the day before the competition. A random draw done by computer may be used at all FIS Freestyle competitions.

3043.7.1 *The Draw*

Each competition shall have a separate start order. The start order for each competition is a separate draw. This draw is used for the Qualification competition.

3043.7.2 *Start Groups*

3043.7.2.1 Ski Halfpipe and Ski Slopestyle Start Groups

For Qualification, competitors will be seeded in heats according to their ranking on either the World Cup Ranking List (for World Cup competitions) or the FIS Points List. Ties in the World Cup ranking will be broken using FIS Points; if still tied, the position will be decided by a draw. All other ties will be broken by a draw.

A Qualification phase may consist of one or more Heats; a Heat shall generally comprise not more than 30 competitors (Men) or 25 competitors (Ladies).

In a Qualification phase with two heats, competitors will be divided on the basis of even and odd positions in the seeding list (Heat 1 shall consist of odd-numbered seeds, Heat 2 of even-numbered seeds). In a Qualification phase with three heats, each third seed shall be assigned to a separate Heat (Heat 1 seeds 1, 4, 7, …etc.; Heat 2 seeds 2, 5, 8,…etc; Heat 3 seeds 3, 6, 9,…etc.). If more than three Heats are scheduled, they shall be constructed according to the same principles.

3043.7.3.1 No changes, additions or substitutions shall be permitted to the Dual Moguls Start List once drawn.

3043.7.3.2 Errors in Start Lists

If a competitor is improperly placed or omitted from a start list due to an error by a Team Captain, that competitor will be added to the start list according to the following procedures. In Aerials, Ski Halfpipe and Moguls the competitor will be added in the first position, except in the case of Dual Moguls, where no changes will be permitted after the Draw. In Ski Cross, the competitor will be added in the last position.

If the Organising Committee makes an error in the start order, the draw must be remade. In this case, the Team Captain must inform the Organising Committee of the error within 15 minutes from the distribution of the start list. After 15 minutes, the error will be treated as an error by the Team Captain.

3043.7.4 *Start List Information*

The start list shall include the following information:

- Name of Competition Sponsor;
- Name of Competition;
- Site of Competition;
- Codex Number;
- Dates;
- Times;
- FIS Codes;
- Name, Nationality, Year of Birth and Bib Number of Competitors
- Starting Order Number
- Name and Nationality of Jury and Judges;
- Name and Nationality of Chief of Course;
- General Course Specifications

3043.7.5 The start list must be circulated to all officials, coaches, competitors, television, media personnel and VIP's.

3043.8 **Qualified for the Final**

The Finals generally consist of the following number of competitors:

Type of Event	**Moguls** L/M	**Dual Moguls** L/M	**Aerials** L/M	**Ski Cross** L/M	**Ski HP/SS** L/M
OWG	20/20	-/-	12/12	16-32/16-32	-/-
WSC	16/16	8/8	12/12	16-32/16-32	12/12
World Cup	12-16/12-16	8/8	12/12	16-32/16-32	6-12/6-12
CoC	8-16/8-16	8-16/8-16	-/-	16-32/16-32	6-12/6-12

If there is a tie among Finalists after the Qualifications, see 3045.4.2.
In Moguls, Aerials, Ski Halfpipe and Ski Slopestyle, the running order for the first or only Final phase shall be reverse of the order of placement in the Qualifications. In Moguls and Aerials, the start order for any second phase can be the reverse of the competitors' rankings following the first phase. In Ski Halfpipe and Ski Slopestyle, the start order of a second phase will be the same of the first phase.

3044 **The Finish Area**

3044.1. **Aerials, Ski Halfpipe and Ski Slopestyle Finish Areas**

The Finish Area for each competition must be large enough to allow the competitor to stop. All fences and barriers must be in place.

3044.2 **Moguls, Dual Moguls and Ski Cross Finish Areas**

The Finish Area for Moguls, Dual Moguls and Ski Cross competitions must be a smooth area equal to the width of the course, for at least 30 meters from the finish line. The finish line shall be 8 - 10 meters wide. The area 3 (three) meters before the timing light must be smooth in order that the competitor will not pass above the beam.

3044.3 **Finish Area Fencing**

The Finish Area is to be completely fenced in. Any unauthorized entry must be prevented. For competitors who have finished their runs, a special area, separated from the actual Finish area, is to be provided.
In that area, contact with the media (written and audio-visual) shall be made possible.

3044.4 **Determination of Finish**

With electric timing, the time is taken when a competitor crosses the line between the finishing posts with any part of his body or equipment and so breaks the contact.
For Ski Cross see rule 4505.6.1;
For Ski Halfpipe and Ski Slopestyle see rule 4611.1

3044.5 **Failure of Electronic Timing**

3044.5.1 If there is a failure of all of the timing systems, a re-run shall be granted.

3045 Calculation & Announcement of Results

3045.1 Unofficial Scores

Scores and Rankings taken by the Chief of Scoring shall be considered unofficial scores. Whenever possible, unofficial scores should be announced to the public with their provisional status clearly indicated.

3045.2 Official Results

3045.2.1 Official Results are determined from the scores and rankings of those competitors who have not been disqualified.

3045.2.2 *Official Results Information*

The Official Results must contain the following information:

- Name of Competition Sponsor;
- Name of Competition;
- Site of Competition;
- Codex Number;
- Date and Time of Competition;
- Name and Nationality of Jury and Judges;
- Name and Nationality of Chief of Course;
- General Course Standards;
- Name of Organisation, Club or Association;
- Competitor Names, Nationalities, Year of Birth, Bib Numbers; FIS Points
- FIS Codes;
- Complete Scoring Calculations (i.e.: individual judges scores and where applicable degree of difficulty factors, speed of competitor, speed points, Dual Moguls protocols, Ski Cross protocols);
- Sanction of National Ski Association and FIS;
- Signature of TD approving the above list.

The names of each nation must be indicated by the FIS code of three capital letters.

The Results are made official following an inspection by both the Chief of Scoring and the Head Judge and by the application of their signatures.

3045.2.3 Results for both Qualifications and Finals must be published.

3045.2.4 There can never be any prize giving ceremonies before the end of a competition.

3045.3 Calculation of Scores

3045.3.1 All published scores are to be rounded down or truncated to two (2) decimal places and used in further calculations only in the truncated form. These results and scores include; Moguls times, Moguls speed calculations, average of Moguls scores, total Aerials results and tie breaking formula. The Degree of Difficulty (DD) are always presented in their original form. 3045.3.2The total score from the Finals or ranking from the Final heat determines the winner. Unless otherwise specified in rules for a specific event format (see Ski Cross 4500, FIS Freestyle Judging Manual Aerials 6000, Moguls 6200, Dual Moguls 6300 and Ski Halfpipe 6400).

3045.4 Tie Breaking

3045.4.1 Tie breaking shall be performed by the Chief of Scoring. Ties in each event shall be broken using the tie breaking procedure defined for that event. If the tie cannot be broken, all tied competitors shall receive the better place and the following place(s) will be unused.

Example:

13th	28.6
14th	26.0
14th	26.0
16th	24.2
17th	24.0

3045.4.2 In the event of an unbreakable tie between the qualifiers for the next Phase, the start order for tied competitors shall be the reverse of their Qualifications start order. If a tie exists for the last place on the Start List for any Phase of a competition after all tie-breaking procedures for that event have been exhausted, all tied competitors shall go forward to that Phase.

3046 Age Limits

3046.1 The Competition and Calendar Year

All competitor ages for the purpose of determining eligibility to participate in FIS competitions shall be expressed in terms of the anniversary of birth (birthday) that the competitor will reach during the calendar year (January to December) that contains the start of the FIS Competition Year in which the competition is scheduled. The FIS competition year begins on the first day of July and ends on the last day of June of the following calendar year.

3046.2 Junior World Ski Championships

With the exception of competitors in Ski Cross, participation in Junior World Ski Championships shall be limited to those competitors whose fourteenth (14th), nineteenth (19th) or any birthday between those two occurs in the calendar year that contains the start of the FIS Competition Year in which the competition is scheduled. Participation in Ski Cross at Junior World Ski Championships shall be limited to those competitors whose sixteenth (16th), twentieth (20th) or any birthday between those two occurs in the calendar year that contains the start of the FIS Competition Year in which the competition is scheduled. (See tables below for details).

3046.3 Major Events

Participation in Olympic Winter Games, World Ski Championships or FIS World Cup competitions shall be limited to those competitors whose fifteenth (15th) or, in the case of Ski Cross events, sixteenth (16th) birthday occurs in or before the calendar year that contains the start of the FIS Competition Year in which the competition is scheduled.

3046.4 Age for all other International Competitions

Participation in FIS competitions, other than those covered by 3046.2 and 3046.3, and that are not Children's, Youth or Junior competitions, shall be limited to those competitors whose fourteenth (14th) or, in the case of Ski Cross events, sixteenth (16th) birthday occurs in or before the calendar year that contains the start of the FIS Competition Year in which the competition is scheduled. (See tables below for details).

3046.5 Classification at International Competitions:

3046.5.1 Admitted years of birth MO/AE/HP/SS

FIS Competition Year	14/15	15/16	16/17	17/18
Children I	2003 2002	2004 2003	2005 2004	2006 2005
Children II	2001 2000	2002 2001	2003 2002	2004 2003
Juniors I	1999 1998	2000 1999	2001 2000	2002 2001
Juniors II	1997 1996 1995**	1998 1997 1996**	1999 1998 1997**	2000 1999 1998**
Licenced earlier	2000 and earlier	2001	2002 and earlier	2003 and earlierand
World Cup World Championships earlier Olympic Winter Games	1999 and earlier	2000	2001 and earlier	2002 and earlierand

** FIS Junior World Championships maximum age

3046.5.2 Admitted year of birth Ski Cross

FIS Competition Year	14/15	15/16	16/17	17/18
U14 (K1)	2002 2001	2003 2002	2004 2003	2005 2004
U16 (K2)	2000 1999	2001 2000	2002 2003	2003 2004
U18 (Junior I)	1998 1997	1999 1998	2000 1999	2001 2000
U21 (Junior II)	1996 1995 1994**	1997 1996 1995**	1998 1997 1996**	1999 1998 1997**
Licensed (WC, WSC OWG)	1998 and earlier	1999 and earlier	2000 and earlier	2001 and earlier

** FIS Junior World Championships maximum age

3050 Protests

3050.1 Pre-Conditions for a Protest

No protest shall be considered by the Jury unless:

- The written protest has been made within the time limits under 3050.3.
- The reason for the protest and a sum of 50 CHF or its equivalent in other currency has to be handed to the Jury. If the protest is accepted, the sum will be reimbursed; if not, the FIS retains the sum.

3050.2 Examination of Protests

The Jury shall meet as soon as logistically possible, taking into consideration the urgency of the request (i.e.: re-run required).

The Jury will invite, for a discussion on protests, the starter and other officials involved, possible witnesses, the competitor concerned and the protesting Team Captain. In addition, any other material such as videotape, film, photographs, etc., shall be examined. Only the members of the Jury shall be present for the final decision on the protest. This must have the support of a majority of the entire membership of the Jury, not only of those present.

In case of a tie, the Chairman of the Jury's vote shall be decisive. The decision shall be posted on the Official Notice Board immediately after the hearing, with the time of posting. The Chairman of the Jury will preside at the hearing.

Minutes of the hearing must be taken and must be signed by the Chairman of the Jury.

Protests concerning re-runs shall be examined immediately by the Jury.

3050.3 Different Types of Protests

3050.3.1 Protests Concerning Qualification

Protests against the qualification of a competitor must be delivered in writing before the beginning of the draw of the competition, to the place designated on the Official Notice Board.

3050.3.2 Protests Concerning the Course

Protests concerning the course must be presented in writing to the Chief of Course or Jury member in good time before the last official training.

3050.3.3 Protests During the Competition

A competitor or Team Captain who protests against any action by another competitor or an official during the competition must take his protest to a Jury member within 15 minutes of completion of the last competition run of that phase of competition.

3050.3.4 Protests Concerning Disqualification

A protest against disqualification must be sent in writing to the place indicated on the Official Notice Board. Such a protest must be received within one hour after the posting of disqualification.

In case of doubt over a disqualification, the competitor is entitled to a "provisional" start.

3050.3.5 Protests Concerning Timing

Protests concerning an error in timing must be delivered within one hour after the posting of the unofficial list of results to the place notified on the Official Notice Board.

3050.3.6 *Protests Concerning False Calculation and Clerical Errors*

A complaint, based not on an alleged breach of the rules on the part of an official or a competitor, but on an alleged error in calculating the results, shall be considered, if sent by registered letter through the competitors' National Ski Association at any time within one month of the date of the competition. If the mistake shall be proved, a corrected list of results shall be published and the prizes redistributed.

3050.3.7 *Protests Concerning Re-Runs*

Protests concerning re-runs must be submitted within 15 minutes of the infraction, to the Jury.

3050.4 Appeals

A competitor at a competition which has been organised by an association or a club affiliated with a National Ski Association may appeal against the decision of the Jury to the National Association of which the organising club is a member.
A competitor may further appeal to the FIS through his own National Ski Association against the decision of the Jury (see rule 225).

3051 Postponement or Cancellation of a Competition

The Jury has the right to cancel an event or an entire competition.
The procedure to make-up the event (or competition) must be decided upon by the Jury immediately after the decision to cancel. If the competition cannot be conducted, then the TD must consult with the FIS to determine whether to make up the competition at a later date or permanently cancel the competition.
If a competition is cancelled or postponed, for whatever reason, notice must be given immediately by e-mail or telefax to the FIS Office and all nations concerned (see 214.3). If a competition is postponed, notice of the re-scheduled date and location must be circulated immediately. The re-scheduled competition shall be treated as a completely new competition (i.e.: entries can change, new start order, etc.).
The RD (if present) and TD can decide to interrupt or cancel a competition (wind, fog, avalanche, blizzard, etc.)
If a competition is to be made up, then the scheduling of the competition must not interfere with the time necessary to conduct any other competition. Under severe circumstances the Qualification may be eliminated and the Finals only may be conducted, provided the official practice time is available. (see 3060.2.4)

3054 Competitor Responsibilities

3054.1 Provide adequate accident insurance (see 212.4 and 3062.2)

3054.2 Must have a recognized binding system and ski stops in all competitions.

3054.3 Responsible for a thorough knowledge of the Rules, Regulations and Judging criteria; in addition to being familiar with the specific rules for Freestyle Skiing and with ICR section 200.

3054.4 Must attend each prize giving ceremony at which they are due to receive an award and must be properly wearing the correct bib. Also, winners must attend media functions. The prize giving ceremony time must be fixed in the official competitor information. However the competitor is not obliged to attend award ceremonies held on any day other than that on which the competition is completed.

3054.5 As a condition of and in consideration of their entries therein, all competitors and their parents or guardians shall be deemed, by signing the Athletes' Declaration, to agree to assume all risks of injury to the competitors' person and property resulting from, caused by or connected with the conduct and management of the competition and to release any and all claims which they may have against the officials, the host National Ski Association and the clubs or Organisers holding the competition and against their officers and their entries shall only be accepted on this condition.

3054.6 In all competitions, all competitors must wear helmets.

3055 Did Not Start (DNS)

DNS is imposed for each competitor who when listed on the start list for a round or phase, does do not start.
(see 3057.11 and 3043.6.1)

3055.1 If a competitor does not start in the competition after the start list has been produced, the competitor shall receive no place in the competition.

3055.2 DNS shall be imposed for a competitor's Final run, if not starting in the Final, after performing the Qualification run. The competitor will receive the same place as a DNF in that phase.

3055.3 DNS shall be imposed for the second jump in Aerials, when a competitor performs a first jump but not a second. The competitor receives a rank based on the score for the first jump.

3055.4 A Dual Moguls competitor, who does not start in a phase other than his or her first phase, shall receive DNS for that phase and be placed equal to the losers of that phase.

3055.5 In Dual Moguls and Ski Cross, if a competitor enters the course before the start command is completed pursuant to Rule 3043.4.4.1 and Rule 4507.7 respectively. DNS shall be imposed.

3055.6 A Ski Cross competitor who does not start (DNS) in any phase of the final, shall receive the last place in the ranking for that final phase. If two or more competitors DNS in a phase, they are ranked according to their qualification rank. A Ski Cross competitor who does not start in a subsequent phase shall receive the last rank of that phase.

3056 Disqualifications (DSQ)

DSQ can be imposed for not complying with the Competitors' Responsibilities (see 3054) or with Joint Regulations for all Ski Competitions, Competitors' Obligations and Rights (see 205). All decisions concerning DSQ will be the responsibility of the Jury.
DSQ will appear on the Final result sheet but shall receive no numerical ranking.
When a DSQ is imposed on a competitor in the Final Phase, then the competitor shall receive no rank in the competition. All competitors from the Qualifications will move up a rank in the results list.
DSQ will be imposed:

3056.1 if a competitor submits any false information or enters a competition under false pretences.

3056.2 for violating the rules for start procedure, with the exception of "force majeure" as outlined in 3043.6.1.

3056.3 for violating any rules on equipment according to sections 3036; 4008.2; 4206.1; 4306.1 and 4511 and the FIS Equipment Rules, Section E.

3056.4 for unsportsman-like behavior.

3056.5 for attempting an Aerials manoeuvre for which the competitor has not been qualified.

3056.6 if not qualified according to 203 - Licences

3056.7 if a competitor alters a course or jump or trains on a closed course or does not stop, when flagged in ski cross.

3056.8 if a competitor accepts outside assistance of any form.

3056.9 if a competitor does not wear a helmet in training or competition.

3056.10 For intentional contact in Ski Cross (see 4508).

3057 Re-Runs

A Jury member can authorise a conditional re-run, on condition that the reasons for it are later confirmed.
The competitor may start in the middle of the interval between two successive competitors, immediately after reporting to the Starter, except where 3057.11 applies.
If the competitor has already been disqualified before the incident for which a re-run was granted, the re-run will not be valid.
A competitor may appeal to a member of the Jury for a re-run immediately after having been obstructed during his run; they must, however, leave the course as soon as possible. The following are considered acceptable circumstances:

3057.1 Obstruction by an official or a spectator.

3057.2 Obstruction by an animal.

3057.3 Obstruction by a competitor who has fallen and has not cleared the course on time.

3057.4 Objects on the course, such as ski poles abandoned by a competitor in a fall.

3057.5 First aid measures which obstructed the competitor.

3057.6 Failure of course to be properly maintained.

3057.7 Any other similar occurrences, outside the competitors' control, causing him to fall, slowing him down or lengthening his course, thus significantly influencing the result.

3057.8 Complete failure of timing systems. (see 3044.5)

3057.9 Failure of judges to observe competitors run.

3057.10 In the Aerials competition a re-run may be granted for loss of ski(s) after take-off and before landing. Only one such re-run shall be granted for each phase.

3057.11 In the Aerials competition, a competitor may, after starting down the inrun, stop and refuse to jump. However, a competitor may only re-start 1 (one) time in each phase. Each Form Judge shall deduct 0.5 points from the score achieved for that

jump. If the competitor refuses more than once, a DNS will be issued to the competitor for that jump only.
A competitor awarded a re-start for this reason shall be re-inserted in the start order after the following three competitors in this phase (first or second jump). Should fewer than three competitors remain to jump in this phase, the re-starting competitor shall be inserted at the end of the list.

3058 Did not Finish (DNF)

A DNF classification in the qualification phase will receive and be listed with no rank on the result list
All decisions concerning DNF will be the responsibility of the Jury.
The competition officials may impose a ruling entitled “Did Not Finish” (DNF) for any infractions listed below. This list does not restrict the ruling of the officials for any infraction, which may occur and is not listed below. DNF may be imposed:

3058.1 for loss of ski(s) any time before landing, during the Aerials competition, if a re-run has already been granted for the same reason for that particular phase (see 3057.10).

3058.2 for skiing out of the course boundaries in Moguls and Ski Cross, which includes not crossing the gate line or the finish gate. In Dual Moguls, crossing the middle line of the course. A competitor shall be deemed to have crossed the middle line if both feet cross the line.

In the Ski Cross qualification if a competitor misses a gate (4501.2.5), he must no longer continue through further gates and must move off the course.

In Ski Cross Final, if a competitor misses a gate, he must not enter or cross the track from below the gate missed.

3058.3 for upgrading an Aerials flight plan after the competitor has left the starting gate.

3058.4 for announcing and performing identical Aerials manoeuvres (4008.5)

3058.5 for a competitor’s Final run, if not starting in the Finals after performing the Qualification run.

3058.7 For loss of ski(s) or stopping for more than 10 seconds during the Mogul competition (4206.2.1).

3058.6 for an Aerial jump score, if the jump is not performed.

3059 Passage across the Gate Line

3059.1 A gate must be passed according to art. 3059.2.

3059.2 A gate has been passed correctly when both the competitor’s ski tips and both feet have passed across the gate line. If a competitor loses a ski, without committing a fault, e.g. not straddling a gate, then the tip of the remaining ski and both feet must have passed the gate line. Wherever two gates are required to be set the gate line is the imaginary shortest line between the two turning poles. (See ICR Alpine 661.4). Wherever a turning flag only is set, the gate line is defined as the extension into the track of the imaginary line formed by the outer pole and the turning pole.

3059.3 Requirements after a Gate Fault

If a competitor misses a gate, they must no longer continue through further gates. Only exception is for SX final phases, as long as the competitor does not interfere with the run of the following competitor or has been passed by a competitor(s).

3060 Competition Protocol

3060.1 Definition of Competition

Freestyle competitions consist of the following events:

- Aerials AE
- Dual Moguls DM
- Moguls MO
- Ski Cross SX
- Ski Halfpipe HP
- Ski Slopestyle SS

Freestyle competitions must provide the opportunity for both ladies and men to compete.

3060.2 Competition Procedures

In all International FIS authorized competitions (see 3043.8) there will generally be:

3060.2.1 Competition Format

- A Qualification Phase consisting of one or more rounds (beginning with one run for all competitors);
- A Final Phase consisting of one or more rounds.

3060.2.2 Reverse Order for Final

In the Finals, the qualifying competitors will start in reverse order or be set into groups, based on their placing from the Qualification results. Results from the Qualifications do not carry over into results from the Finals.

3060.2.3 Altering the Formats

- The Jury may alter this format to be only Finals in the following circumstances:
- the number of competitors is equal to or less than the size of the normal Finals field for that competition.
- inclement weather or snow conditions.
- any other adverse conditions which may require a shortened program.

3060.2.4 Interruption of Competition

If there is an interruption of a competition, the competition should be resumed when conditions warrant. The results completed before the interruption will remain valid if it is possible to complete the competition on the same day. Otherwise, the results prior to the interruption will be cancelled except if the Qualifications or some phases or rounds of the finals have been fully completed. In that case, only the uncompleted Finals phases will be postponed but must be completed on the same competition site. If the Finals cannot be fully completed, the results of the Qualifications or different phases of the Final will be valid.

3060.2.5 Schedule approval by FIS

If an Organiser wishes to run more than one competition in one day, the competition program must be approved by the FIS.

3060.2.6 *Moguls*

In the Moguls competition, all competitors will make at least one run. The qualified ladies and men, as specified in rule 3043.8 shall move to the Finals. There can be more than one round in the qualification (Q) and final (F) phases.

Based upon the results of the qualification round (Q1), a set number of competitors will be directly seeded into the final. An optional, 2nd qualification round (Q2), with no more than 20 competitors, based upon the ranking of the competitors remaining from Q1 will take part in Q2. In Q2, an equal number of competitors from the Q1 will be seeded into the final.

In the final phase, there can be two or three rounds depending on the level of competition. The top seeded competitors from the qualification phase will compete in the first round of the final (F1). A limited number of the highest ranked competitors from that round will proceed to the second round (F2). If a third final round is scheduled, the highest ranked competitors from F2 will compete in that round, otherwise, F2 becomes the final round. The numbers that are to compete in the various rounds at different levels of competition are defined by the following table.

		Q1	**Q2**	**F1**	**F2**
WC	Ladies	N	20	12-16	6
	Men	N	20	12-16	6

		Q1	**Q2**	**F1**	**F2**
WSC	Ladies	N	20	18	6
	Men	N	20	18	6

		Q1	**Q2**	**F1**	**F2**	**F3**
OWG	Ladies	N	20	20	12	6
	Men	N	20	20	12	6

3060.2.7 *Dual Moguls*

Dual Moguls is either a series of one-run duals or a Single Qualification and with a Dual Final. In the Final, the winner of each phase advances to the next phase. Ultimately, the last two remaining will ski against each other for first place.

3060.2.8 *Aerials*

In Aerials, several formats may be used: the Final, the Standard, the Short or the Championship. There are two options for the Final phases in the Final format.

For all formats, the start list for the first phase shall be determined by a random draw.

In all formats, at least one phase must be completed for the results of the competition to be valid.

The start order for the second phase(s) may be in reverse order of the results of the first phase.

If a phase cannot be completed, then the results from the most recent completed phase shall be valid.

3060.2.8.1 Final Format

In the Final format, all competitors shall compete in a Qualification phase consisting of one or more rounds. There can be two options for the Final phase. In the first option, after the Qualification phases, the top 12 ladies and top 12 men shall advance to the Final phases. The finalists will take one additional jump and these results shall be added to those from the first phase. The remainder of the field will

be ranked according to the results in the Qualification phase. In the Final phase, the competitors shall run in reverse order of the placing in the Qualification phase.
In the second option, the top 8 competitors from the Qualification will be seeded into the Final, which will consist of a series of elimination heats, semifinal phases and Final phases.
In each phase, there is a series of heats with a pairing of two competitors. The start order of the Final phase will be based upon the Qualification results and the results of each heat. The winner of each heat will advance into the next phase and eventually the winner will be determined in the Final heat.
In each heat, the competitor with the higher score will advance to the next phase and be paired against a competitor from other heats based upon a ladder.

3060.2.8.2 Standard Format

In the Standard format, a decreasing number of competitors will proceed into the next rounds and phases. If the second phase cannot be completed then the results from the first phase will be valid.
There can be more than one round in the Qualification (Q) and Final (F) phases.
If only one Qualification round is to be run, all the competitors in the Final shall be determined from the results of that Qualification round. If a second Qualification round (Q2) is to be run, half the field for the Final shall be filled from the highest ranked in the first round (Q1);
then a second Qualification round (Q2) shall be run, comprising no more than 12 of the highest ranked competitors remaining from Q1, The ranking of the competitors in Q2 shall be decided using the better of the two scores each competitor received in +2 and Q2, the other half of the Final field shall then be filled by the competitors ranked highest in this round. Competitors not qualified for the Final shall be ranked according to the better of their scores in Q1 and Q2.
In the Final phase, there can be two or three rounds depending on the level of the competition. The top seeded competitors from the Qualification phase will compete in the first round of the Final (F1). A limited number of the highest ranked competitors from that round will proceed to the second round (F2). If a third Final round is scheduled, the highest ranked competitors from F2 will compete in that round; otherwise, F2 becomes the Final round. The numbers that are to compete in the various rounds at different levels of competition are defined by the following table:”

		Q1	Q2	F1	F2	F3
WC	Ladies	N	12	12	6	
	Men	N	12	12	6	

		Q1	Q2	F1	F2	F3
WSC	Ladies	N	12	12	9	6
	Men	N	12	12	9	6

		Q1	Q2	F1	F2	F3
OWG	Ladies	N	12+N	12	9	6
	Men	N	12+N	12	9	6

3060.2.8.3 Short Format

In the Short Format, there shall be no Qualification phase and each competitor shall make two jumps in the Finals. The competitor’s score is the sum of the scores of both jumps. This format is not to be used at World Cup or Major Competitions. In the Short Format, if the competition is halted after the first round of

jumps, the results from that round shall constitute the final results for the competition.

3060.2.8.4 Championship Format – Major Competitions
In the Championship format, all competitors shall compete in a Qualification phase consisting of one or two rounds. The qualified competitors as specified in rule 3043.8 will move to the Finals. These finalists shall each have two or more rounds in the Finals. In the Finals, the competitors shall run in reverse order of the placing in the Qualification phase. The remainder of the field will be ranked according to the results in the Qualification.

3060.2.8.5 Major Competition Format
World Ski Championships and Olympic Winter Games shall use the Championship format.
If either a Championship format Qualifications and Finals or two different Standard or Final competitions are scheduled, they may be held over two days (e.g.: Qualifications on one day, Finals on another day).

3060.2.9 Ski Halfpipe and Ski Slopestyle
The Ski Halfpipe and Ski Slopestyle competition shall consist of Qualifications and Final with or without a Semi-Final. The Jury can determine the format, based on the number of competitors and time schedule. This decision must be made before and announced at the first Team Captains' Meeting.

Qualification phases shall consist of two runs; the competitor's best single run shall count. Finals shall consist of qualified competitors. If Semi-Finals are not included, equal numbers of the highest-ranked competitors from each Heat shall proceed to the Final.

3060.2.9.1 For Ski Halfpipe and Ski Slopestyle, the Final consists of two (2) or three (3) runs. The start order for the final run shall be the reverse of the ranking from the qualification.

3060.2.9.2 Competition format with Semi-Final
2-Heat format: The top three Men and the top two Ladies from each Heat shall proceed straight to the Final (6 Men, 4 Ladies). The next six Men and the next three Ladies from each Heat shall proceed to the Semi-Final (12 Men, 6 Ladies).

3-Heat format: The top two Men and the top Lady from each Heat shall proceed straight to the Final (6 Men, 3 Ladies). The next four Men and the next two Ladies from each Heat shall proceed to the Semi-Final (12 Men, 6 Ladies).

The Semi-Final shall consist of two runs; the competitor's best run shall count. The top six Men shall proceed to the Final. In the 2-Heat format, the top two Ladies shall proceed to the Final; in the 3-Heat format, the top three Ladies shall proceed to the Final. The Final shall consist of two runs; the competitor's best run shall count. For start order, see 3060.2.2.1.

3061 Accidents

3061.1 The FIS and the host nation organising the competition undertake no responsibility for damages or injuries suffered by the competitors.

3061.2 The FIS Freestyle Committee is to be notified in writing of any accidents or injuries in full detail. These must be reported by the TD (see 3030.7).

3062 Insurance

3062.1 Host Nation

The host nation for a FIS authorized competition, is responsible for providing adequate comprehensive liability insurance coverage for the competition and all aspects of competition. See Rules 212.1 to 212.3.

3062.2 Competitors

With the issuance of a licence and competition entry the National Ski Association confirms that valid and sufficient accident insurance for training and competition is in place for the competitor and assumes full responsibility.

3065 Organisational Meetings

3065.1 Team Captains' Meeting

The Team Captains' meeting will be held according to 216 of the Joint Regulations for all Ski Competitions. The purpose of the Team Captains' meeting is to provide detailed information concerning competition procedures and activities, determine bib draws, gather competitor licences and qualifications and handle all necessary organisational matters.

It is then the responsibility of the representative Team Captains to communicate this information to their respective participants. The Team Captains' meeting shall be attended by the Race Director (if appointed) Head Judge, TD, Chief of Competition and Chiefs of Course and all important competition officials. This meeting shall be chaired by the Chief of Competition from the host nation.

3065.2 Organisation Committee Meetings

At FIS authorized competitions there should be several organisational meetings preceding and possibly during the competition. It is the responsibility of the Chief of Competition to call all necessary organisational meetings and to inform the key individuals involved in the competition, so that they may attend.

Further, the results of these meetings should be minuted and published to the key individuals involved in the competition that may or may not have been able to attend. It is the responsibility of the Chief of Competition to communicate the essential information concerning the competition so that all parties may be reasonably informed.

3065.3 Judges' Meetings

The Head Judge for the competition will be responsible for conducting a judges' meeting prior to the first day of competition. It is highly recommended that the judge's meetings commence at least one day prior to the first day of competition. The Head Judge will be responsible for the organisation of the meetings.

3065.4 Jury Meetings

The Jury for a competition will meet at least once before the first Team Captains' meeting. The Jury must also meet once before official training, in order to do an official course inspection. The Head of the Jury will act as Chairman in all meetings of the Jury.

3rd Section

4000 Aerials

4001 Definition

Aerials competitions shall consist of different acrobatic jumps, stressing takeoff, height and distance (referred to as "air"), proper style, execution and precision of movement (referred to as "form" and "landing"). For specific competition procedures, see 3060.2.

4002 The Aerials Site

4002.1 Joint Regulations for Ladies' and Men's Aerials Sites

4002.1.1 Aerials sites for World Ski Championships, Olympic Winter Games and international competitions included in the FIS Calendar must be approved and homologated by the FIS.

4002.1.2 *General Characteristics of the Aerials Site*

The Aerials site must be constructed specifically according to the specifications contained in the FIS Freestyle Course Standards Manual. The course shall be properly prepared and free of all visible and known hazards. All measurements taken are in degrees as opposed to percentages.

4002.1.3 *Layout of the Aerials Site*

4002.1.3.1 Construction of Aerials Site

Aerials sites should be constructed out of earth in the off-season. If this is not practical, then a suitable natural location should be chosen. In order to ensure the correct facility is available this construction should precede the competition by a minimum of three weeks.

Artificial surfaces can be used along with snow for parts on the inrun and the takeoff.

Standards for Aerial ramp constructions.

Element	Length (m)	Width (m)	Angle (°)
Inrun	70	14	25
Table	21	14	0
Landing	25	18	38
Outrun	25	22	0

4002.1.3.2 Location of Aerials Site

The Aerials site shall be located where spectators can have easy access, where facilities and services are located nearby and if possible, where snowmaking can service the site.

4002.1.3.3 Start and Finish Area
The Aerials site should not have any obstacles or obstructions that will cause any inconvenience or difficulty for the competitor. There should be ample space available in the Start and Finish area for the competitors.

4002.1.3.4 Lift at Aerials Site
The Aerials site must be serviced by uphill transportation with a minimum capacity of 150 persons per hour. This transportation must cover a minimum distance from the finish area to the knoll. The maximum turnaround time for this transportation system must be no more than 10 minutes.

4002.1.3.5 Velocity Indicator
Velocity indicators must be provided at all Aerials sites. The display must be located on the Judges' Stand and must be readable from the table area and be expressed in kilometers per hour. The measurement must be taken at the transition between the inrun and the table according to the FIS Freestyle Course Standards Manual.

4002.1.3.6 Inrun Markers
Twenty (20) markers at two-meter intervals, must be placed on the side of the inrun, in a straight line ending approximately 20 meters above the transition.

4002.1.3.7 Wind Indicators
Three (3) wind indicators shall be placed on the Aerials site, one at the start and two on the knoll. The wind indicators on the knoll are to be located on the top front side of the judges' stand and the other side of the knoll. The wind indicators are to be made of a brightly colored plastic material being 1 meter long by 5cm wide.

4002.1.3.8 Wind Measurements
The Aerials site must have a series of anemometers that measures the wind speed in meters per second. Measurements are to be taken on the knoll, the inrun and finish area.

4002.1.3.9 Notice Board
A Notice board must be located at the Aerial Judges' Stand.
The unofficial results will be updated on the official Notice Board on an on-going basis.

4002.1.4 Preparation and Inspection of the Aerials Site

4002.1.4.1 The Aerials site shall be completely prepared for jumping at least three days before the Aerials competition and must then be available for training.

4002.1.4.2 Before training begins on the first official training day, the competitors and Jury must inspect the course. The Jury shall determine the time of inspection.

4002.1.4.3 Immediately after this inspection the TD and other members of the Jury shall be available at the outrun to receive requests and suggestions from the competitors and trainers regarding the Aerials site.

4002.1.4.4 Notification must be sent to an organising committee by a National Ski Association at least 2 weeks prior to the date of the competition, requesting that a Floater be built. If no request is received, jump site construction will conform to the Mean Standards for Aerials sites as stated in the FIS Freestyle Course Standards Manual.

4002.1.5 Official Training

4002.1.5.1 The official training for the Aerials competition is an inseparable part of the competition. The competitors are required to participate.

4002.1.5.2 The official training shall ideally encompass at least three days before the competition, although not necessarily consecutively.

4002.1.5.3 The official training shall be a minimum of one-day (two hours of actual jumping time).

4002.1.5.4 The entire facility must be properly prepared and have proper medical services available during official training.

4002.1.5.5 Competitors not wearing their bibs will not be allowed to participate during official training. Bibs must be easily visible.

4002.1.5.6 On the Aerials competition day the competitors are allowed two hours of training before the competitions begin. The Jury may reduce this to one hour.

4003 Scoring

A split scoring system will be used at all Aerials competitions. Refer to FIS Freestyle Judging Manual, 6003 Scoring procedures.
The competitors acrobatic skiing will be judged on three basic components as follows

4003.1 Air; consisting of 20% of the score
Definition see: FIS Freestyle Judging Manual 6004.1

4003.2 Form; consisting of 50 % of the score
Definition see: FIS Freestyle Judging Manual 6004.2

4003.3 Landing; consisting of 30% of the score
Definition see: FIS Freestyle Judging Manual 6004.3

4004 Scoring Procedures

Refer to FIS Freestyle Judging Manual 6003 Scoring procedures.

The judges will each evaluate the competitors' performance based upon the criteria set forth in the FIS Freestyle Judging Manual, see 6004. The score will be multiplied by the appropriate Degree of Difficulty factor (D/D) to determine the total score for each jump. The competitors' final score for both jumps is determined by adding together the total scores from each jump.
See rule 3045.3 for Calculation of Scores.

4005 Calculation of Degree of Difficulty and Difficulty Charts

Refer to FIS Freestyle Judging Manual 6006.

4006 New Manoeuvres in Competition

4006.1 Approval of new Jumps

New or additional Aerials manoeuvres or modifications, may be proposed by submitting them to the FIS Freestyle Committee, in writing with the name and full description of the manoeuvre.
The FIS Freestyle Committee shall have final authority with regard to acceptance of new manoeuvres and the assignments of proper D/D factors.

4006.2 Limitations

4006.2.1 Inverted manoeuvres shall be limited to three (3) somersaults during competition.

4006.2.2 Upright manoeuvres shall be limited to five (5) positions.

4007 Qualifications and Age Limits

4007.1 Qualification of Skills

The National Ski Association of a country in which a competition is organised shall not allow competitors to attempt any Aerials manoeuvres for which such competitors are not qualified, in connection with an international Freestyle competition, except for authorized qualification proceedings under the authority of an authorized representative of the FIS Freestyle Committee.

4007.3 Qualification of Manoeuvres

To be eligible to attempt an Aerials manoeuvre in international Freestyle competitions, a competitor must have a valid qualification licence for the specified manoeuvres, issued by the competitors' National Ski Association. A competitor's Aerials qualification licence may be updated during the competition season, with the exception of the actual day of Aerials competition. Each National Ski Association shall have the responsibility of supplying to the FIS Technical Delegate, an updated list in the English language of all its competitors' qualifications prior to each Aerials competition.

4007.4 Removal of Qualifications

Competitors are subject to suspension or annulment of their Aerials qualifications by the Jury if they have shown an inability to perform the Aerials manoeuvres for which they have been qualified by their National Ski Association. Such a ruling may result in severe reprimands or sanctions imposed against the respective nation.

4008 Special Procedures: Aerials

4008.1 Official Training Time

The Aerials course shall be completed and be ready for competition a minimum of 24 hours prior to the start of competition. All competitors shall be allowed an opportunity to train on the course. On the day of competition, there shall be a minimum of two hours of training time. Additional training time may be provided on a time-available basis or at the discretion of the Jury.

4008.2 Equipment

4008.2.1 Competitors must wear a helmet in the Aerials competition when jumping in practice or competition.

4008.2.2 Bindings must be a recognized release system meeting DIN specifications.

4008.3 Loss of Ski(s)

See Rule 3057.10 and 3058.1. Loss of ski(s) during or after landing will be evaluated by the judges in accordance with the judging criteria.

4008.5 **Definition of Different Jumps**

A competitor shall not repeat the same Aerials manoeuvre during a Phase. Jumps shall be considered to be different if :

4008.5.1 In the case of upright manoeuvres
there is a change in the number of manoeuvres performed or the kind of manoeuvre performed;

4008.5.2 *In the case of upright rotational manoeuvres*
there is a change in the number of rotations;

4008.5.3 *In the case of inverted manoeuvres;*

4008.5.3.1 there is a change from front to back or vice versa;

4008.5.3.2 or there is a different number of somersaults;

4008.5.3.3 or there is a different number of twists but the number of somersaults remains the same.

4008.5.3.4 or there is the same number of twists and somersaults but the number of twists done in a single somersault differs by at least one twist.

4008.5.3.5 or one of the following combinations is performed: Back Layout (bL) and Back Tuck (bT) or Back Pike (bP); Back Lay Lay (bLL) and Back Lay Tuck (bLT) or Back Lay Pike (bLP).

4008.6 **Starting Procedure**

Refusal to start will be treated as a balk. See Rule 3057.11.

4009 **Knock Out Format**

4009.1 Ordering of the Phases between Ladies and Men's
Men's and Ladies Rounds will be run in sequence, a full men's or ladies phase must be completed before the next men's or ladies phase can start. The order of the phases is:
Ladie's Phase of Eight, then Men's phase of Eight
Ladie's Phase of Four, then Men's phase of Four
Ladie's and Men's Small Final
Ladie's and Men's Big Final.

4009.2 **Pairings and Heats for the Final Phases**

In the 1st Phase (Quarter Final) there will be 8 jumps with 4 pairs and 4 heats,
Heat 1; 7th place vs. 2nd place
Heat 2; 6th place vs. 3rd place
Heat 3; 5th place vs. 4th place
Heat 4; 8th place vs. 1st place

4009.3 **Pairings and Heats for the Semi Final Phase**

In the 2nd Phase (Semi Final) there are 4 jumps with 2 Pairs and 2 Heats.
Heat 5 - Semi Final comprises of the winners from Heat 1 and 2.
Heat 6 - Semi Final comprises of the winners from Heat 3 and 4.

4009.4 **Pairings and Heats for the Small and Big Final**

In the 3rd Phase (Small Final and Big Final) there are 4 jumps, with 2 pairs and 2 Heats.

Heat 7 / Small Final; for 3rd and 4th place (loser of Heat 5 vs. loser of Heat 6)
Heat 8 / Big Final; for 1st and 2nd place (winners of Heat 5 vs. winners of Heat 6)

4009.5 Final Ranking

4009.5.1 Ranking of the eliminated Competitors

The losers from each phase will be ranked according to the scores from those heats and phases. (for places 5 to 8).
The highest score in the previous phase will receive the rank according to the previous phase:5th place will be determined by the highest ranked score in that phase, the 2nd highest score will be ranked as 6th place, 3rd highest ranked score will be placed 7th and the 4th highest ranked score will be ranked in 8th place.

4009.5.2 Rankings determined by the Semi Final and Final

The highest ranked score from each semi-final heat will then go on to the final phase, which will determine 1st and 2nd place.
The loser in each semi-final heat will go will then go on to the Small Final, which determines 3rd and 4th place.

4009.6 Special Procedures

4009.6.1 Lower ranked Competitor Jumps First

The lower ranked Competitors shall jump first in each heat.
For the semi-final, the competitor with the lower score from the previous phase shall jump first.
For the final, the competitor with the lower score from the previous phase will jump first.

4009.6.2 Jump Limitation

No competitor shall perform the same jump twice, except in the Final phase when the competitor can repeat a jump from a previous Phase.

4009.6.3 Competitor not jumping in a Phase

A competitor who does not jump in a heat shall receive a ranking based upon their score in the previous phase.
The other competitor shall not jump in that heat, but shall proceed to the next phase.

4100 SKI SLOPESTYLE

4101 The Slopestyle Course

The competition will be held on a course with a variety of hits, jumps, rails, tables, big-airs, etc. with two or more lines that the competitors may choose from.

4102 Technical Data

Code	Slopestyle Criteria		Measurement
VD (m)	Vertical drop		
	Level A	Level B	Level C
	min. 150,0 m	min. 80,0 m	min. 50.0 m
I (°)	Inclination, average		12.0° or steeper
SW (m)	Slope Width		30.0 m
TF (n°)	Type of features, all Levels		min. 2
SC (n°)	Sections, one or more features at the same location of the slope One judged hit can be evaluated		min.
	Level A	Level B	Level C
	6	4	3
JP (n°)	Min. number of jump sections Level A	Level B	Level C
	3	2	1
	Start Criteria		
SA (m)	Start Area		Length 10.0 m
			Width 30.0 m
DW (m)	Drop-in Ramp Width		12.0 m +/- 4,0 m
DL (m)	Drop-in Ramp Length		min 6.0 m
	Finish Criteria		
FA (m)	Finish Area, length according to the construction and the speed of the last feature.		
FW (m)	Finish Area Width		min. 30.0 m
	Competition Level		
	Level A	Level B	Level C
	OWG, WSC, WJC, WC	YOG, COC, UVS	NC, FIS, JUN

4102.1 General characteristics of the course

The average slope inclination should be approximately 12 degrees. The slope should have a regular pitch, without marked variations of the inclination.
The Slopestyle course must be a minimum of 30 meters wide.

4102.2 Slopestyle course description

The Slopestyle course shall contain a variety of types of feature (table top jumps, fun boxes, quarter pipes, waves/jumps, rails and ridges, or other feature types). It shall have different sections, with one or more features at the same location of the slope with at least one judged hitthat can be evaluated. The course should have a minimum of two (2) different features types and a minimum number of jumps and judged hits in total according to the competition level as below.

Competition Level	Min number of Jumps	Min number of Judged Hits
Level A	3	6
Level B	2	4
Level C	1	3

The distance between the features should allow a smooth transition and performance. The course should be designed to require a minimum run time of 20 seconds. The features and the overall course should be designed in such a manner as to allow use by both male and female competitors. The ideal Slopestyle course should be technically challenging, with a wide variety and balance of features in diverse combinations.

4102.3 Start and finish area

The start area must be flat and wide enough for competitors to prepare for the competition and for coaches, staff and media teams to work. The finish area must be wide enough to provide the competitors a safe termination of their performance. The entire course should be visible from the finish area.

4102.4 Exceptions

Exceptions can be made for indoor or in-city events (indoor style or in-city style):

4102.5 Safety considerations

Other features can be built but safety considerations must always be a priority. There should be a minimum of two rescue / first aid personnel at the start area at all times during practice and competition.

5th Section

4200 Moguls

4201 Definition

Moguls competition consists of one run of free skiing on a steep, heavily moguled course, stressing technical turns, speed and aerial manoeuvres. For specific competition procedures, see 3060.2.

4202 The Moguls Course

4202.1 Joint Regulations for Ladies' and Men's Moguls Courses

4202.1.1 *Homologation of Moguls Courses*

Moguls courses for World Ski Championships, Olympic Winter Games and international competitions included in the FIS Calendar must be approved and homologated by the FIS.

4202.1.2 *General Characteristics of the Moguls Site*

The Moguls course must be uniformly covered in moguls, with a reasonably constant grade and fall-line, free of obstacles, with satisfactory snow cover. The site must also conform to specifications contained in the FIS Freestyle Course Standards Manual.

4202.1.3 *Layout of the Moguls Site*

4202.1.3.1 The Moguls Course

The Moguls site should have a constant grade with one continuous fall-line.
The slope should not be overly concave or convex, nor should it have distinct changes in gradient.
The course should be as evenly covered in moguls as possible. Hard, sharp bumps should be smoothed out, deep ruts, ice balls and snow machine tracks should be removed. Bumps that throw the competitor too far into the air should be modified.
Air bumps (jumps) should conform to Course Specifications for Moguls.

4202.1.3.2

Air Bump Criteria and Specifications	Measurement
Distance from:	
- the end of the last bump to the take off	4.0 m – 5.0 m
- the airbump takeoff to end of landing	15.0 m
Jump Height	50 – 60 cm
Landing Zone Gradient	Greater than 26°
Takeoff Angle	26° to 30°
Air Bump Width	130cm± 10cm

4202.1.3.3 Control Gates
Nine (9) control gates, (defined by flags maximum of 0.75 m wide by 1.20 m high) shall be located on the course at equally spaced intervals, with track width measuring 8 -12 meters. Track width does not include the width of the flags.

4202.1.4 Preparation and Inspection of the Moguls Site

4202.1.4.1 The Moguls course must be completely prepared for skiing before the Moguls competition and must then be available for training. When snow cover is minimal, the Organising Committee must transport additional snow to cover the course. The Jury may postpone or cancel a competition if the moguls do not satisfactorily meet a reasonable minimum to constitute a Moguls competition.

4202.1.4.2 Before training begins on the first day of official training, the competitors and Jury must inspect the course. The Jury shall determine the time of inspection.

4202.1.4.3 Moguls may be machine constructed and all care must be taken to ensure the lines are equal and the number and size of the moguls.

4202.1.4.4 Immediately after this inspection the TD and other members of the Jury shall be available on site to receive requests and suggestions from the competitors and trainers.

4202.1.4.5 To improve upon marginal lighting conditions the organiser may color the moguls, add pine bough branches, etc.

4202.1.4.6 Some moguls may be modified for use as Air Bumps (see 4202.1.3.2 and 3035.2.7). There should be air bumps at the top and bottom of each course in approximately the same positions. The take-off of the top air bumps should be placed at 15% of the course length and the take-off of the bottom air bumps should be placed at 20% of the course length from the finish line.

4202.1.4.7 No person, other than members of the course crew under the direction of the Chief of Course, shall take any action intended to change the state of the course unless instructed to do so by a member of the Jury. This prohibition applies at all times, but especially during official Inspection of the course.

4202.1.5 Official Training

4202.1.5.1 The official training for the Moguls competition is an inseparable part of the competition. The competitors are required to participate.

4202.1.5.2 The official training shall encompass at least three days before the competition, although not necessarily consecutively.

4202.1.5.3 The Jury may reduce this period if sufficient training is available on one or two days.

4202.1.5.4 The entire facility must be properly prepared and with proper medical services available.

4202.1.5.5 Competitors not wearing their bibs will not be allowed to participate during official training.

4202.1.5.6 On the Moguls competition day the competitors are allowed a minimum of 30 minutes of training before the competition. A period will be designated at beginning of training for course inspection after which normal top-to-bottom training can take place.

4203 **Scoring**

The competitor's Moguls skiing will be evaluated on three basic components as follows:

4203.1 **Turns**

Consisting of 60% of the score
(Definition refer to FIS Freestyle Judging Manual 6204.1)

4203.2 **Air**

Consisting of 20% of the score
(Definition refer to FIS Freestyle Judging Manual 6204.2)

4203.3 **Speed**

Consisting of 20% of the score
(Definition refer to FIS Freestyle Judging Manual 6204.3)

4204 **Scoring Procedures**

4204.1 **Split Scoring system**

Refer to FIS Freestyle Judging Manual. 6203.1

For Moguls Qualification, see 3060.2.1

4204.2 **Pace Time**

The Pace Times for ladies' and men's Moguls are set according to the standards determined by the FIS Freestyle Committee. To calculate the Pace Time for a specific course, take the length of the course in meters and divide by the Pace Time in meters/sec.

Men's Pace Time: 9.70 meters / per second.
Ladies Pace Time: 8.20 meters / per second.

4206 **Special Procedures: Moguls**

4206.1 **Equipment**

4206.1.1 There are no ski length requirements.

4206.1.2 All competitors shall use a recognized release DIN binding system and devices to prevent runaway ski(s).

4206.1.3 Competitors shall wear a helmet in the Moguls competition for inspections, official training sessions and competitions.

General regulations concerning equipment can be found in Section 3037 and in the FIS Equipment Rules, Section E.

4206.2 **Special Procedures**

4206.2.1 Loss of Ski(s)
A competitor who, having started, loses one or both skis, or stops for 10 seconds or more, shall receive a ruling of Did Not Finish (DNF) for that run. The loss of other equipment, including ski pole or poles, shall not result in DNF provided that the competitor finishes.

4206.2.2 Number of Aerials Manoeuvres

All courses are two jump courses unless otherwise specified by the Jury. Every competitor must perform two different jumps in order to maximize points. Two different jumps can be defined as:

Loop	allow only one jump in this category per run
Inverted flips	allow only one jump in this category per run unless there is a different direction of initiation (front vs. back) or rotation added (straight over jump vs. full twisting)
Off axis	allow the same jump from same category if there is rotation different by 180 degrees. (same system as with straight rotations)
Straight rotation	if two jumps are performed from this category they must differ by 180 degrees
Uprights	must have a different number of moves (e.g. double spread, triple twister)

The recommended number of Aerials manoeuvres shall not restrict the competitor to the stated amount, but represents the number of Aerials manoeuvres, that will receive evaluation. For example, if two Aerials manoeuvres are recommended by the Jury, a competitor who performs only one manoeuvre can only receive a maximum of 50% of the total possible Air score. Manoeuvres in excess of the recommended amount will be disregarded in order of lowest to highest scoring. For example, if two Aerials manoeuvres are recommended and a competitor performs three manoeuvres, the judges will disregard the lowest scoring manoeuvres.

4206.3 Forerunners

The organisers must provide 8 qualified forerunners, four men and four ladies.

6th Section

4300 Dual Moguls

4301 Definition

Dual Moguls competition consists of mogul skiing on a heavily moguled course. Technical turns, speed and aerial manoeuvres are used to evaluate the competitors with the winner of each phase advancing to the next phase as further explained in Rule 4305 and Rule 4306.4

4302 The Dual Moguls Course

4302.1 Joint Regulations for Ladies and Men's Dual Moguls Course

4302.1.1 Homologations of Dual Moguls Course

Dual Moguls courses for all international competitions included in the FIS Calendar must be approved and homologated by the FIS.

4302.1.2 General Characteristics of the Dual Moguls Site

The Dual Moguls site must be uniformly covered in moguls, with a reasonably constant grade and fall-line, free of obstacles, with satisfactory snow cover. The moguls may be machine constructed and must conform to specifications contained in the FIS Freestyle Course Standards Manual.

4302.1.3 Layout of the Dual Moguls Site

4302.1.3.1 The Dual Moguls Course

The Dual Moguls course should be a constant grade with one continuous fall-line. The slope should not be overly concave or convex, nor should it have distinct changes in grade.

The course must be as evenly covered in moguls as possible. Hard, sharp bumps should be smoothed out, deep ruts, ice balls and snow machine tracks should be removed. Bumps that throw the competitor too far into the air should be modified. With respect to air bumps, should conform to course Specifications for Dual Moguls (see 4302.1.4).

4302.1.3.2

Air Bump Criteria and Specifications	Measurement
Maximum Distance to:	
- the end of the last bump to the take-off	4.0m – 8.0m
- the airbump takeoff to end of landing	15.0m (top) – 20.0m (bottom)
Jump Height	50 – 80cm
Landing Zone Angle	Greater than 28°
Takeoff Angle	26° to 35°
Air Bump Width	130cm ±10cm
Jump take off to landing Knuckle	2.0m – 4.0m

4302.1.3.3 Control Gates

Nine (9) control gates (defined by flags maximum of 0.75m wide by 1.20m high) designating the outside of the course and center line shall be located on the course at equally spaced intervals, with each track width measuring 6.5 ± 0.5 meters. Track width does not include the width of the flags.

4302.1.4 Preparation and Inspection of the Dual Moguls Site

4302.1.4.1 The Dual Moguls site must be completely prepared for skiing before the Dual Moguls competition and must then be available for training. When snow cover is minimal, the organising committee must transport additional snow to cover the course sufficiently. The Jury may postpone or cancel a competition if the moguls do not satisfactorily meet a reasonable minimum to constitute a Dual Moguls competition.

4302.1.4.2 Moguls may be machine constructed and all care must be taken to assure the courses are equal with respect to lines and the number and size of the moguls.

4302.1.4.3 Before training begins on the first day of official practice, the competitors and Jury must inspect the course. The Jury shall determine the time of the inspection.

4302.1.4.4 Immediately after this inspection the Technical Delegate and other members of the Jury shall be available on site to receive requests and suggestions from the competitors and trainers.

4302.1.4.5 To improve upon marginal lighting conditions the organiser may color the moguls, add pine bough branches, etc.

4302.1.4.6 Some moguls may be modified for use as air bumps (see 4302.1.3.2 and 3035.2.7). There should be Air Bumps at the top and bottom of each course in approximately the same positions. The take-off of the top air bumps should be placed at 15% of the course length and take off of the bottom air bumps should be placed at the end of the course or 20% of the course length from the finish line. When a mogul and dual mogul competition are held at one location, 4202.1.4.6 applies.

4302.1.5 Official Training

4302.1.5.1 The official training for the Dual Moguls competition is an inseparable part of the competition. The competitors are required to participate.

4302.1.5.2 The official training shall encompass at least two days, although not necessarily consecutively.

4302.1.5.3 The Jury may reduce this period.

4302.1.5.4 The entire facility must be properly prepared and with proper medical services available during training.

4302.1.5.5 Competitors not wearing their bibs will not be allowed to ski on the course.

4302.1.5.6 On the competition day the competitors are allowed a minimum of 30 minutes of training before the competition begins. The Jury may reduce this if conditions require it.

4303 Scoring

The competitors' Moguls skiing will be evaluated on three basic components as follows (see 3045.3 for general scoring procedures):

4303.1 Turns; consisting of 50% of the score

(Definition refer to FIS Freestyle Judging Manual 6204.1 to 6204.1.1.9 and 6403)

4303.2 **Air; consisting of 25% of the score**

(Definition refer to FIS Freestyle Judging Manual 6403)

4303.3 **Speed; consisting of 25% of the score**

(Definition refer to FIS Freestyle Judging Manual 6403)

4304 **Scoring Procedures**

A panel of judges shall administer scores based upon specific duties for each judge, as set forth in the FIS Freestyle Judging Manual 6403.
The judges shall evaluate the competitors' performance with respect to "turns", "air" and "speed" as further described in the FIS Freestyle Judging Manual.
The competitor shall be judged from the time the run is started until they cross the finish line. The competitor should come to a controlled and complete stop in the finish area. Aerials manoeuvres landing beyond the finish line will be disregarded.

4305 **Competition Procedures (also see Rule no. 3060.2.2)**

4305.1 **Dual Moguls Competition Format**

The Dual Moguls competition can be carried out using two formats. In one format, Duals are done from the beginning of the competition and in the other format; Duals are done in the Finals. In the second format, the qualification for the Final is done with a modified form of Moguls competition.

4305.2 **Dual Moguls with Seeded Groups**

4305.2.1 *Seeding for Qualification*

Seeding shall be done according to the most recent FIS World Cup standings for Dual Moguls, with the exception of the first two competitions each season, which shall use the previous season's standings. Any ties shall be broken by a random draw. The top 32 competitors will be seeded with the top 16 being seeded according to the place and the top 17 to 32 competitors being randomly drawn and seeded according to the drawn number between 17 and 32. All other competitors (any greater than 32) would be randomly drawn to a number greater than 33 and be placed at the corresponding number on the ladder (see the draw list attached).

4305.2.2 *Assignment of Red and Blue Courses*

Color (or side) of course will be predetermined in the following manner:

Phase of 128	top competitor in pairing will be red
Phase of 64	top competitor in pairing will be blue
Phase of 32	top competitor in pairing will be red
Phase of 16	top competitor in pairing will be blue
Phase of 8	top competitor in pairing will be red
Phase of 4	top competitor in pairing will be blue
Final Phases	top competitor in pairing will be red

The "top competitor" is defined by position in the bracket, not by seed.

In all cases, the left side (looking up the hill) will be the Blue course and the right side will be the Red course

4305.2.3 **Ranking of those eliminated in each Round**

The ranking to fourth place will be determined by skiing ("dualing off").
All competitors in the rounds of 5-8, 9-16, 17-32, 33-64, 65-128 who did not proceed to the next round will be ranked in accordance with 4307.
Those receiving a DNS will be ranked according to their seed.
Those receiving a DNF will be ranked according to their seed.
Those that receive a score but do not advance to the next round will be placed in accordance with the judges points accumulated. Ties in this group will be broken by 4307.

4305.3 **Dual Final with Single Qualification**

A single Moguls run will be used to qualify and seed competitors for Dual format Finals. Final formats can consist of the following number of competitors; 8, 16, 24 or 32 competitors. Only top 4 places will be determined by 'dualing off'.

4305.3.1 *Qualification / Moguls*

The Moguls course shall be divided into duals lanes (red / blue) for the Qualification run and the Final phases.

4305.3.2 *Starting Order*

The order that the competitors start in shall be according to the starting list. Competitors with odd start order (start 1, 3, 5 etc), start on the red course and competitors with even start order (2, 4, 6 etc) will start on the blue course.

4305.3.3 *Final / Dual Moguls*

The organiser can propose to the FIS the number of the competitors to have in the Final. The program ought to be around a 45 to 75 minutes of skiing.

4305.3.3.1 The results from the Qualification are used select competitors for the Finals.

4305.3.3.2 The rankings of 1, 2, 3, 4, shall be determined by duals.

4305.3.3.3 The remaining rankings shall be determined according to 4307.

4305.3.3.4 Based upon the results of the Qualification, the higher ranked competitor can decide to ski in either the blue or the red course.
The higher ranked competitor shall inform the Starter / Start officials of their decision in the start area in a reasonable time before the start of that phase.

4306 **Special Procedures**

4306.1 **Equipment**

For further definitions, see FIS Equipment Rules, Section E

4306.1.1 There are no ski length requirements.

4306.1.2 All competitors shall use a recognised release DIN binding system and devices to prevent runaway ski(s).

4306.1.3 Competitors must wear a helmet in the Dual Moguls competition for inspections, official training sessions and competitions.

4306.2 **Loss of Ski(s)**

A competitor who, having started, loses one or both skis, shall receive a ruling of Did Not Finish (DNF) for that run. The loss of other equipment, including ski pole or poles, shall not result in DNF provided that the competitor finishes.

4306.3 **Aerials Manoeuvres (Dual Moguls)**

Every competitor must perform two different jumps in order to maximize points.

Loop	allow only one jump in this category per run
Inverted flips	allow only one jump in this category per run unless there is a different direction of initiation (front vs. back) or rotation added (straight over jump vs. full twisting)
Off axis,	allow the same jump from same category if there is rotation different by 180 degrees. (same system as it's with straight rotations)
Straight rotation	if two jump done from this category they must differ by 180 degrees
Uprights	must have a different number of moves (e.g. double spread, triple twister)

A competitor who performs only one manoeuvre can only receive a maximum of 50% of the total possible Air score.

4306.4 **Dual Moguls Start Device**

4306.4.1 *Approval by FIS*

All start devices must be approved by the FIS before they can be used in competition.

4306.4.2 *The Start Ramp*

The Start Ramp shall be prepared in such a way that the competitors can stand relaxed on the starting line and can quickly reach full speed after leaving the start.

4306.4.3 *Placement of the Gate*

The specifications can be adjusted to the needs of the specific course.
The start gates are to be placed in the center of each of the courses. The gates have to open simultaneously and it must be impossible for a competitor to open the gates themselves or cause the gates to lock by applying pressure to them.

4306.4.4 *Dual Moguls Gate Standards*

Two hinged gates each 200-cm wide and 40 cm in height shall be attached to a horizontal pole. A start handle is attached at 90° to the horizontal pole in the center of the two start gates. The starting block (behind the board) must be covered with plastic to protect the skis. The weight for each hinge gate is 15 kg. Gates meeting the standards in 4507.8.3 can also be used.

4306.4.5 *Opening System*

The opening system shall operate in such a way that both gates open outwards on operation of a single control mechanism. Mechanical controls are preferred over electrical ones, for reasons of reliability and portability.

4307 Ranking and Tie Breaking of those eliminated in Dual Moguls knock-out rounds

4307.1 In each round, the scores will be compared between all of the eliminated competitors. The competitors' scores will be sorted from the highest to lowest scores. Competitors with higher score will be grouped, followed by the next highest score until all competitors are classified. Competitors within each group will then be ranked according to their seeding in the competition, and all will be ranked above those from the same round who did not receive a score.

4307.2 Competitors who DNF will be ranked according to their seeding (see 4302) or Qualification (see 4303) rank, below all competitors from the same round who received a score and above all those who DNS in the same round.

4307.3 Competitors who DNS in any round except the first round of Dual Moguls with Seeded Groups (see 4307.4) will be ranked according to their seeding (see 4302) or Qualification (see 4303) rank, after all other classified competitors in the same round.

4307.4 Competitors who DNS in the first round of Dual Moguls with Seeded Groups (see 4302) will not be classified and will have no rank in the competition. They shall be listed on the Results above any who are DSQ.

7th Section

4500 Ski Cross

After a timed qualification run, a group of competitors' compete against each other on a specially prepared Ski Cross course that includes different types of turns, jumps, waves and other freestyle terrain features.

4501 Ski Cross Technical Data

4501.1 Vertical Drop

4501.1.1 Courses for all competitions must be a minimum of 30 vertical meters to a maximum 270 vertical meters. The same course may be used for men and ladies. Average slope should be between 5º to 22º.

4501.1.2 The total skiing time for a course shall be between 20 – 80 seconds.

4501.1.3 The following additional criteria shall apply to course specifications;

4501.1.3.1 World Cup, World Championships and Olympic Winter Games
Ski Cross Normal Format:
Length: 1050m ± 25% (~800m to 1300m)
Vertical Drop: 200m ± 30% (~140m to 270m)

World Cup Short Course Format:
Length: 200m - 800m
Vertical Drop: 30m – 140m
The gradient of the slope should be between 5^0 to 12^0

4501.1.3.2 Continental Cup
Length: minimum 750m
Vertical Drop: minimum 165m

4501.1.3.3 National Championships / FIS
Length: minimum 650m
Vertical Drop: minimum 130m

4501.1.3.4 Sprint / Indoor / FIS
Length: minimum 250 m
Vertical Drop: minimum 50 m

4501.2 Gates and Poles

4501.2.1 Type of Poles to be used
A Ski Cross gate consists of a triangular gate panel attached to one non-breakaway non-hinged, static or fixed base, outside pole and on the inside or turning side a hinged, or breakaway, 45 cm long stubby pole (turning pole).

4501.2.2 Color of Gates
Consecutive gates must alternate in colour unless the gate defines a corridor or banana. The colour of the triangular gate panel and the poles must be the same.

4501.2.3 *Size of Triangular Gates*

Triangular gates must be used in Ski Cross. The size of the gate is:

Base	Long side	Short side
130cm	110cm	40cm

The turning pole must be a stubby pole (45 cm long)

4501.2.4 *Placement of the Triangular Gates*

4501.2.4.1 The gates must be set so that the competitors can distinguish them clearly and quickly even at high speeds. The gate should be set at right angles to the competition line. In certain circumstances, competitors may be required to pass between two gates of the same color (for example: corridors).

4501.2.4.2 The gates must be set on both sides of all features such as rollers and take off of jumps as well as the finish line. Placing gates in blind locations such as landings shall be avoided. In flat non-banked turns, banked turns or any other type of turns a single turning gate shall be set and no outside gate will be required.

4501.2.5 Correct Passage across the Gate Line

A gate has been passed correctly when both the competitor's ski tips and both feet have passed across the gate line. If a competitor loses a ski, without committing a fault, e.g. not straddling a gate, then the tip of the remaining ski and both feet must have passed the gate line. Wherever two gates are required to be set the gate line is the imaginary shortest line between the two turning poles. (See ICR Alpine 661.4). Wherever a turning gate only is required to be set, the gate line is the extension of the line from the outside pole of the gate to the gate to the turning pole which lies past the turning pole and extends into the course.

4502 The Ski Cross Course

4502.1 General characteristics of the courses.

The slope should preferably be of an average grade (ideally 12º-22º) with varied terrain with an average slope of 15º. The Ski Cross slope must be a minimum of 30 meters wide.

The Ski Cross track width for 4 to 6 competitors, shall be no less than 5 meters in width.

Under certain conditions for short sections (50 meters or less) the course width may be a minimum of 20 meters.

4502.2 Ski Cross Features

The ideal Ski Cross course will allow for the construction of all or some of the following terrain features:

Banks (crescent shaped), Double Banks, Single, Double or Triple Jumps Rollers, Offset Rollers - (Single, double, triple, etc.), Step-up jumps, spines and double spines, Pro style jumps, Hip jumps, Table top jumps and medium or long GS type turns (when building a feature is not possible).

Other terrain features can be built but safety considerations must always be a priority. Gap jumps will not be permitted under any circumstances. The features should be designed so that competitors are attempting to gain speed and not having to brake before each one.

4502.3 Course Preparation

The track should be closed to the public at least 24 hours before the training. Terrain features and jumps must be built with sufficient time so that the snow has

been compacted to ensure that they can be properly maintained during training and competition. The use of artificial means is permitted (salt, water, etc.) and required if necessary.

4502.4 Course Design

The total number of terrain features and jumps should be at the discretion of the course designer but will incorporate as many different possibilities as is practical. Blind jumps or terrain features where a competitor is unable to see the landing from the take-off should be avoided. The course should be designed to separate the competitors as quickly as possible after the start (e.g. 3-5 rolls or other terrain features between the start and the first turn). These terrain features should be placed in a straight line from the start to the first turn. Minimum distance of the straight section of the course between the start and the first turn should be no less than 60 meters. The arc of the first turn shall be no less than a 100 degrees change in direction (i.e. the degrees difference between the entrance and the exit of the turn. The first turn is usually the largest turn of the course, wide enough to accommodate all competitors at once. The Start should be designed in such a way that the competitors can gain speed without using their ski poles or skating.

4503 Course Setting

4503.1 Setting of the Gates

The setting of the gates must be done before the official inspection and should incorporate the skilful use of the terrain with the integration of terrain features and jumps into the setting. Minor adjustments in the setting may be necessary during the training to adjust the course for a smooth competition line. Any changes made during training should be announced in the start area so all competitors and Team Captains are aware of such changes.

4503.2 Gate Setters

The course setting shall be performed by the Connection Coach together with the Chief of Course in consultation with the Jury and the Competitor Advisory Committee.

4504 Competition Programme

4504.1 Inspection

The competitors are allowed to inspect the course by slowly sliding down through or alongside the course. Inspection times are at the discretion of the Jury but should be a minimum of 30 minutes. All competitors are required to complete at least one inspection run prior to training.
Competitors must visibly wear their bibs and their helmets during the inspection

4504.2 Official Training

Scheduling should allow for 2 training runs per competitor in all training sessions.

4504.2.1 Competitors not wearing their bibs will not be allowed to participate during official training.

4505 Execution of Ski Cross

4505.1 Number of Competitors per Competition

Finals are based on either 32/64 or 16/32 ladies and men with 4 competitors per heat or either 48 or 24 ladies and men with 6 competitors per heat.

4505.2 Qualification and Final Format

Ski Cross will be run according to a single knockout format. Timed runs are used to qualify competitors for the Ski Cross Final.

4505.2.1 No Qualification and Final Format

In case of a “No Qualification Format” all competitors are filled into the Heat Bracket (4506) according to rule 4505.3.1, 4505.3.2, 4505.3.3

4505.3 Seeding for the Qualification

4505.3.1 Seeding for Major Competitions

For World Cup, World Championships and Olympic Games, the best 16 Ski Cross competitors present will be drawn according to their highest ranking on the WCSL, WC points list or FIS points list (published several times a year). If the competitors are tied, the higher points in the second category will decide their position. If they are still tied their position will be decided by a draw.

4505.3.2 The Ski Cross Draw

The first group (8/16) will be randomly drawn. The remaining competitors will be ranked according to their higher ranking on the World Cup points list or the FIS points list.

4505.3.3 Seeding for other Competitions

For other FIS Competitions, the best 16 Ski Cross competitors present will be drawn according to their highest ranking on the FIS points list. The remaining competitors will be ranked according to their FIS Point ranking.

The non-ranked competitors are assigned bibs based upon a random draw.

4505.3.4 Starting Order in Extraordinary Conditions (Excluding First Seed)

In extraordinary conditions, the Jury may change the starting order for the qualification (when snowing, etc.). A group of at least 6 competitors, nominated in advance, start before start number 1. These 6 competitors are drawn from among the last 20% of the start list. They will start in reverse order of their start numbers. This rule is not applied when the organiser provides at least six qualified forerunners.

4505.4 Qualification Phase

4505.4.1 Number of Qualification Runs:

All competitors will have 1 timed qualification run.

4505.4.2 Tie Breaking:

In the Qualification, if two or more competitors have the same time (tied), then the competitor that started later in the qualification will win the tie.

4505.4.2.1 Timing

Wireless Timing as per 3041.2.7 is permitted for SX Qualification below World Cup Level.

4505.4.3 *Draw of the start gate position for the Qualification*
The choice of which of the start gate stalls is to be used for the Qualification phase of the competition must be made by random draw at a Team Captains' meeting held after the completion of all official training days.

4505.4.4 *Double competitions*
In the case of a double competition at one location, the choice of the qualification start gate stall must be redrawn through a separate random draw at the relevant Team Captains meeting for the second competition.
The jury has the right to run both qualifications on one day.

4505.5 Competitors Advancing to next Phase

The top 2 competitors (4 competitors per heat) or top 3 competitors (6 competitors per heat) advance from phase to phase as determined by their rank of finish in each heat.

4505.6 Determination of Rank

Ranking in each Heat is determined by the first part of the body that crosses the finish line.

4505.6.1 *Finish Line Camera*
Whenever possible, a finish line camera (video or photo finish) should be available.

4505.6.1.1 Ties in Heats before the Final
In case of an unbreakable tie in the heats (between the 2nd, and 3rd or 2nd and 3rd or 4th placed competitors), the competitor with the lowest qualification rank will advance.

4505.6.1.2 Unbreakable Ties in the Final
In case of an unbreakable tie in the small final or the big final, they will remain tied.

4505.6.2 *Ranking of Competitors that Do Not Finish*
In a case where more than one competitor does not complete the course nor cross the finish line, the rankings in that heat will be based on the location where the competitor(s) have completed the course. The competitor that has made it further down the course will receive the higher rank.

4506 **Ski Cross Finals Pairings**

Pairings for the Finals will be according to the following:

4506.1 **Ranking for 8 heats / 4 per heat with 32 Ladies or Men**

Heat #	1st position	2nd position	3rd position	4th position
1	1	16	17	32
2	8	9	24	25
3	5	12	21	28
4	4	13	20	29
5	3	14	19	30
6	6	11	22	27
7	7	10	23	26
8	2	15	18	31

4506.2 **Ranking for 4 heats / 4 per heat with 16 Ladies or Men**

Heat #	1st position	2nd position	3rd position	4th position
1	1	8	9	16
2	4	5	12	13
3	3	6	11	14
4	2	7	10	15

4506.3 **Ranking for 8 heats / 6 per heat with 48 Ladies or Men**

Heat	1st posi-tion	2nd positio n	3rd positio n	4th positio n	5th positio n	6th positio n
1	1	16	17	32	33	48
2	8	9	24	25	40	41
3	5	12	21	28	37	44
4	4	13	20	29	36	45
5	3	14	19	30	35	46
6	6	11	22	27	38	43
7	7	10	23	26	39	42
8	2	15	18	31	34	47

4506.4 **Ranking for 4 heats / 6 per heat with 24 Ladies or Men**

Heat	1st positio	2nd positio	3rd positio	4th positio	5th positio	6th positio
1	1	8	9	16	17	24
2	4	5	12	13	20	21
3	3	6	11	14	19	22
4	2	7	10	15	18	23

4506.5 **Ranking for 8 heats /4 per heat with 64 Ladies or Men**

Heat #	1st position	2nd position	3rd position	4th position
1	1	32	33	64
2	16	17	48	49
3	9	24	41	56
4	8	25	40	57
5	5	28	37	60
6	12	21	44	53
7	13	20	45	52
8	4	29	36	61
9	3	30	35	62
10	14	19	46	51
11	11	22	43	54
12	6	27	38	59
13	7	26	39	58
14	10	23	42	55
15	15	18	47	50
16	2	31	34	63

4507 **The Start**

4507.1 **Bibs**

Qualification Bibs are numbered on front and back for better visibility by the course judges.

4507.2 **Bib Colors for the Finals**

For the Final, the main 4 colors of the bibs will be Red, Green, Blue and Yellow. White and Black will be used additionally if a 6-person format is used.

4507.3 **Bib Assignment for the Final**

Assignment of the bibs in each heat is based upon the competitors' qualification ranking. The highest ranked competitor in the qualification is assigned the red bib and can choose the lane first. The second ranked competitor is assigned the green bib, the third ranked is assigned the blue bib and the fourth ranked is assigned the yellow bib.

4507.4 **Ready for Start**

It is the competitors' responsibility to arrive at the start gate in time.
A missed start is a DNS. (Did Not Start)

4507.5 **Start Interval for Final Phase**

During the Team Captains' Meeting before the final phase, a start interval will be announced by the Jury.

4507.6 Start Gate Lanes and Start Positions

Each starting position is identified by the Lane of the Start Gate.
Looking up the course to the Start Gate the positions are set from left to right:
For a four (4) competitor Ski Cross, Position 1 is to the far left and Position 4 to far right.
For a six (6) competitor Ski Cross, Position 1 is to the far left Position 6 is to the far right.

4507.8 Ski Cross Start Ramp and Start Device

4507.8.1 The Start Ramp

The Start Ramp shall be prepared in such a way that the competitors can stand relaxed in the starting device and can quickly reach full speed after leaving the start.

4507.8.2 Placement of the Start Gate

The start gates are to be placed in the center of the course. The gates have to open simultaneously and it must be impossible for a competitor to open the gates themselves or block the opening of the gate by applying force to the gate.

4507.8.3 Ski Cross Start Gate Standards

Hinged gates, each 100 cm wide and 40 cm in height.
There shall be 60 cm between the outside edges of each gate section.
It should be possible to have the height of the handles at 95 cm above the snow level and set parallel to the hinged gate. Different positions for the handles should be available for children and junior competitors.
The size of each handle shall be 10 cm long with a width between 3 cm to 4 cm. The width between the ends of each handle needs to be between 80 cm to 90 cm. The starting surface of the gate must be covered with a protection for the skis. The gate must have sufficient weight to operate property.
The locking system should operate in such a way that the gates open outward, as least past 45 degrees, on operation of a single control mechanism.

4507.8.3.1 Electronic Release Device

It is permissible to use an electronic device to open the drop door. Every drop door needs to be locked into place and then released from the same electronic impulse. The random release time must be between 0.0 and 4.0 seconds. For the Start Command, on 'attention' (see 4507.7), the random sequence is begun by the Starter.
On the World Cup, World Ski Championships and Olympic Winter Games, the Electronic Release device is mandatory.

The electronic release device must also have a back-up power source available that can meet the demands of a minimum of 20 start sequences. If this back-up system fails it must be possible to operate the start gate through the use of a mechanical starting release system.

4507.8.4 Approval of Start Device

All start devices (and electronic release devices) for FIS World Cup, World Championships and Olympic Winter Games shall be approved by the FIS

4507.8.5 Start Command
„**We are ready for the next Heat, proceed to the Start Gate**“
„**Enter the Start Gate**“ (30 seconds before the start command)
„**Skiers Ready!**“, then „**Attention!**“ followed by the Starter opening the start gate (or in the case of an electronic release device being used; the Starter beginning the random start sequence).

4507.8.6 Approval of Start Device
All Start Devices for FIS World Cup, FIS World Championships and Olympic Winter Games shall be approved by the FIS.

4508 Contact

4508.1 Definition of Contact and Blocking

Intentional contact by pushing, pulling or holding another competitor's arm, leg or pole or other means, which causes another competitor to slow down, fall or exit the course is not allowed and is an automatic disqualification. A competitor is not allowed to bring their arm, leg or ski pole in front of another competitor's body to avoid being passed. Blocking, by intentional movements of the body or leaving the natural skiing line is not allowed. The "natural skiing line" is defined as the fastest way between the features and around the gate line. All contact infractions will be at the discretion of the gate judges and the Jury.

4508.2 Disqualification for Intentional Contact (DIC)

Should a competitor be disqualified based upon an infraction of rule 4508.1 such competitor shall be Disqualified for Intentional Contact (DIC) and will not be ranked in the competition.

4508.2.1 Re-runs shall not be granted solely as a result of a violation of Rule 4508.1 and all competitors in the heat, other than those that receive a DIC, shall be ranked as they finish. Re-runs will only be given pursuant to the applicable provisions of Rule 3057.

4508.2.2 All violations of Rule 4508.1 which result in a DIC shall be announced in the finish area and communicated to the competitor that received the DIC or their Team Captain as soon as possible and in any event prior to the commencement of the next heat. The DIC will then be posted on the official notice board at the bottom and top of the course indicating the section of the course where the infraction occurred. All DIC decisions must be recorded and reported by the FIS Technical Delegate in their TD Report.

4508.2.3 When a competitor receives a 2nd DIC in one competitive season, the Jury is required to refer the competitor to the Appeals Commission pursuant to Rule 224.13.

4508.2.4 Should any competitor in a heat feel that a violation of Rule 4508.1 occurred in that heat and was not announced to be a DIC, they may request of the Finish Referee or any other member of the Jury that the heat be reviewed. Such request must be made prior to the start of the next heat.

4509 Protests

There shall be no protests of a decision that a competitor has violated Rule 4508.1.

4510 **Final Ranking**

4510.1 **Four Person Format**

Competitors 1 to 4 are ranked according to their place of finish in the final heat. Competitors 5 to 8 are ranked according to their place of finish in the phase. All remaining competitors are ranked according to their ranking in each heat, the phase they go out in (e.g. quarter final) and their qualification times within that phase. (example: competitors ranked 9 to 16 in the quarter final would be ranked according to their ranking in the heat and then by their qualification times.)
In the case of a “No Qualification Race” (4505.2.1) the place/rank in the heat order shall be used to rank the competitor.
Athletes in the top 8/16 whose bib number has been randomly drawn will use their WCSL/WC/FIS rank for finals ranking.

4510.2 **Six Person Format**

Competitors 1 to 6 are ranked according to their place of finish in the final heat. Competitors 7 to 12 are ranked according to their place of finish in the phase. All remaining competitors are ranked according to their ranking in each heat, the phase they go out in (e.g. quarter final) and their qualification times within that phase. (example: competitors ranked 13 to 24 in the quarter final would be ranked according to their ranking in the heat and then by their qualification times.)
In the case of a “No Qualification Race” (4505.2.1) the place/rank in the heat order shall be used to rank the competitor.
Competitor in the top 12/24 whose bib number has been randomly drawn will use their WCSL/WC/FIS rank for finals ranking.

4510.3 Cancellation of Final

If the competition is cancelled after a phase, all competitors ranked 1st, 2nd, 3rd and 4th in each completed phase will be ranked according the qualification times.

In the no qualification format the start list position will be used. Competitors in the top 8/16 whose bib number has been randomly drawn will use their WCSL/WC/FIS rank for finals ranking.

4511 **Equipment**

For further definitions, see FIS Equipment Rules Section E.

4511.1 **Thickness of ski boot soles**

See FIS Equipment Rules Section E, 4.0.

4511.2 **Number of Skis**

Each competitor is limited to two pairs of skis on the competition day (Qualification and Final). The Organiser will mark the skis.

4511.3 **Helmets**

The competitors are required to wear helmets.
See FIS Equipment Rules Section E, 6.5.

4511.4 **Ski Suits**

Ski suits must be two pieces; pants and a separate top. Suits worn in the Alpine events of Downhill (DH), Super-G (SG), Giant Slalom (GS), Slalom (SL), and Speed Skiing are not allowed.

Suit base material shall be textile fabrics excluding rubber, neoprene, leather or vinyl like materials or fabrics. Patches of different material are allowed provided that textile fabrics shall remain, in any event, predominant.
Non-protruding body protection and padding is recommended.

4511.5 Protection Equipment

Protection equipment including back protector or any other padding or body amour must be worn on the body and separate from the ski suit (outer wear). Protection and padding must not be built into the ski suit or attached to the ski suit by a zipper, Velcro or any other means. Fastening devices such as elastic straps, zippers, nylon straps, buttons, snaps, velcro, one or 2 sided tape, or any other methods shall not be used to tighten the suit material closer to the body or prevent the natural fall of the clothing.

4511.6 Suit Measurement

The gap in the material must be a minimum of 80mm, measured everywhere around the circumference of each leg from the mid thigh to the top of the ski boot and 60 mm everywhere around the elbow and the bicep.
The vertical distance between the ski boot sole and the bottom of the pant leg, must be a maximum of 170 mm.
See FIS Equipment Rules Section E, 6.1.

A tolerance of two (2) mm (width of material) and 5 mm (pant length) (as noted on the measurement tool or actual 4mm of material) outside of the measurement regulations shall be allowed for one control. A warning shall be issued in this the case and announced. Each subsequent control must be within the specified regulations.

4512 Special Procedures

4512.1 Loss of Ski(s)

A competitor who - having started and before a pre-determined location on the course - loses one or both skis, shall no longer be considered capable of actively competing and shall receive a ruling of Did Not Finish (DNF) for that run.
The pre-determined location on the course will be close to the finish of the track and take into account the unique characteristics of each individual event track on a case by case basis. The determination will be guided by the location and nature of the final feature or jump that leads into the finish area and whether it is considered possible to safely complete the course should a loss of equipment occur.
If a competitor loses one or both skis after the pre-determined location, they may still cross the finish line and complete the run. The pre-determined location shall be decided by the Jury prior to the Qualification or Seeding round and will be communicated to teams at the relevant Team Captains meeting

8th Section

4600 Ski Halfpipe

4601 Halfpipe
The Halfpipe is a channel constructed in the snow.

Code	Halfpipe Criteria		Measurement
S (ft/m)	Size:		
	Level A	Level B	Level C
	22 ft / 6.7 m	18 ft / 5.5 m	15 ft / 4.6m
L (m)	Length (skiable length)		
	22 ft / 6.7 m	18 ft / 5.5 m	15 ft / 4.6m
	min 150 m	min 120 m	min 100 m
	recommended 170m	recommended 150m	recommended 120m
H (m)	Height, from bottom of pipe to coping		
	22 ft	18 ft	15 ft
	6.7 m	5.3 m	3.5 m
V (m)	Vert, top of the wall		0,2 m: 82 - 83 degree
I (°)	Inclination, centre line of pipe		
	22 ft / 6.7 m	18 ft / 5.5 m	15 ft / 4.6m
	min 17,0°	min 16°	min 14°
	recommended 18°	recommended 17°	recommended 15°
W (m)	Width, from coping to coping		
	22 ft / 6.7 m	18 ft / 5.5 m	15 ft / 4.6m
	min 19 m	min 17 m	min 15 m
	recommended 19- 22 m	Recommended 17 - 19 m	recommended 15 - 17m
	Competition Level		
	Level A	**Level B**	**Level C**
	OWG,WSC,WC	OC, UVS, WJC, YOG	NC, FIS, JUN

4602 The Halfpipe site

The Halfpipe site must conform to specifications.
The drop in gives the competitors the opportunity to enter the Halfpipe with proper speed.
The access ramp to the drop in cannot be used as springboard.

All FIS World Cup Halfpipes must be within the approved specifications and must have a grooming machine specifically designed for Halfpipe preparation.
Training periods must be observed. Two (2) days of training before the competition day are to be provided.
The Jury may reduce this period under special conditions.

4603 Official Training

The Chief of Competition will communicate training times during the first Team Captains' meeting.

There must be a minimum of 2 days of training prior to the actual competition day. In special cases, the Jury can reduce training times.

4604 Competition format - Single format

Qualifications:
2 runs for all competitors.

Finals:
6 to 12 competitors qualified
2 or 3 runs each
Best score of the runs is used to determine the results.

4605 Execution

The qualification run is part of the Halfpipe competition.
The official results of the qualification run shall determine the qualified competitors for the finals.
Only the finals shall determine the final ranking for the qualified competitors.
The official results shall include:
- the ranking list from the qualification run

4605.1 Draw

The start order shall be determined by random draw by computer.

4606 Competitors Equipment

4606.1 Bibs

The shape and size of the start numbers may not be changed on penalty of disqualification. All bibs must be worn in the proper position at all times during training, competition and prize giving.

4607 Public Address System

4607.1 Music is used at Halfpipe competitions. The sound system must be powerful enough for the competitor to hear the music clearly and without distortion while in any part of the pipe.

4607.2 The Chief of Sound and DJ is responsible for stock tapes during the competition.

4608 Judges Stand

4608.1 The minimum size of the judges' area must be 8 meters by 3 meters. The judges' viewing area should be constructed to provide ample room for the appropriate number of officials and to provide room for viewing and all proper amenities for the operation of the competition.

The judges' area has to be fenced and closed off to competitors and spectators.

4609 Start and Finish officials

4609.1 The Starter

The starter is responsible for the warning signal and the start command. The starter must be in communication with the Jury.

4609.2 **The Finish Official**

The finish official is in charge of the finish area. They are responsible to ensure the control and exit for all competitors.

4610 **The Start Area**

The start area must be closed off to everyone except the starting competitor and the start officials.

4610.1 Start command will be given by the starter**.**

4611 **The Finish Area**

The finish area must be flat and big enough to allow the competitor to come to a safe stop. It has to be fenced off completely. The fences should be laid out in a way that there is maximum visibility for officials, media and spectators.

4611.1 **Finish line**

The placement of the finish line is determined by the Head Judge and marked by painting a colored line across the bottom of the pipe and up the walls to the lip.

For a trick to count towards a competitor's score the competitor must take off on or before the finish line.

4612 **Scoring Procedures**

4612.1 For each Halfpipe competition, there are to be five scoring judges plus a Head Judge.

4612.2 Scores are awarded in accordance with the FIS Judging Criteria.

4612.3 Judges shall use scorecards to mark score by bib number and may keep a memory board to record notations on specifics (tricks, falls, etc.)

4613 **Halfpipe Course/Site**

4613.1 The drop in section allows competitors to enter the Halfpipe with momentum; it is not used to attempt a manoeuvre.

4613.2 Only manoeuvres in the Halfpipe will be scored: no manoeuvres outside the Halfpipe shall be scored.

4614 **Special Procedures: Halfpipe**

4614.1 **Stops**

If a competitor stops in the Halfpipe for more than 10 seconds, the competitor will be scored up to that point. The competitor shall exit the course as soon as possible.

9th Section

4700 Freestyle Team Competition Rules

4700.1 Types of Team Competitions

The team competition rules can be used in the Aerials and Moguls competitions. The competitions can either be in the men's competition or the ladies competition or a mixed competition of ladies and men.

4700.2 Team Size

Maximum team size of three (3) competitors on one team and one additional reserve competitor per gender, who can be substituted.
Teams can be made up of male or female competitors or a mixed team of male and female competitors.
No more than two competitors can be of one gender on each mixed team and participate in the competition.
There needs to be at least 5 or more ladies or men's teams to hold those competitions separately, if not then the mixed team competition will be held.

4700.3 Number of teams per Nation

Each team is composed of competitors from a single Nation.

4700.4 Competition Format

There are three competition phases.
Each competitor can only take part in one phase and take one run.

4700.5 Draw, Starting List and Competition Procedures

The teams of 3 persons and the substitutes are determined before the draw.
In the qualification phase each competitor takes one run. Based upon the results of that phase, the number of teams are determined for the final.
In the Final, which may have a second (of 8 teams) and third phase (of 3 teams), the nations' run in the reverse order of the ranking of the previous phase.
The start order for the second and third phases is based upon the results of the previous phases and ranked by nation.

The ranking after each phase is announced.

4700.6 Ranking

Each score from each team member is added up and the teams are ranked after each phase according to these totals.
The national team with the highest total score after the three phases wins. All other teams are ranked according to their scores.

4800 Competitions under Artificial Light

The running of competitions under artificial lights is permitted.

4800.1 Lighting Specifications

4800.1.1 The light level anywhere on the course may not be less than 80 lux, measured parallel to the surface. The lighting should be as uniform as possible.

If the competition is to be broadcast on television the level of lighting should be checked with the person responsible for TV production. Special arrangements have to be made as required individually.

4800.1.2 The floodlights must be so placed that the light does not alter the apparent topography of the slope. The light must show the competitor the exact picture of the terrain and must not alter the depth perception and exactness.

4800.1.3 The lights shall not cast the competitor's shadow into the racing line and shall not blind the competitor by glare.

4800.1.4 Obstacles and buildings in the immediate vicinity of the course must be clearly lighted.

4800.2 Lighting Inspection and Course Setting

The TD together with the Jury must check ahead of time that the lighting conforms to the rules. The organisers shall provide him with light meters having cosine correction.

4800.2.1 The TD must submit a supplementary report on the quality of the lighting.

4800.2.2 The course setter must set the course on the section of the competition course which is best lit.

INDEX

A

Accident Insurance 62
Accidents 61
Admitted year of birth Ski Cross 52
Admitted years of birth MO/AE/HP/SS 52
Advertising 42
Advisory Committee 40, 41
Aerials 44, 50, 63, 66; **Different Jumps** 67; Inrun 64; Inverted manoeuvre 67; **Jump Shapers** 41; **Jumps** 67; Limitations 66; **New Manoeuvres** 65; qualifications 42, 66; **Qualifications** 66; **Site** 63, 64; Start 45, 46; start line 45
Age 66; **Limits**; **Aerials** 66
Age Limits 51
Air: Aerials 65; **Dual Moguls** 76; Moguls 73
Air Bumps: Criteria 71; Dual Moguls 75, 76; Moguls 71; Team Captains 42
Alters a course 56
Announcer 46, 47
Appointment of Judges 39
Artificial Light 94
Assistant Starter 34, 45
Award ceremonies 50; Not held on the competition day 54

B

Balk: Aerials 67
Bib Colors for the Finals 85
Bib Coordinator 32, 34
Bibs: Aerials 65; **Assignment for the Final Ski Cross** 85; Competitors not wearing their bibs, Dual Moguls 76; **Correctly worn** 42; Ski Cross colors R, G, B, Y 85
Blue course: **Blue course ready** 46
Blue course 46
Blue course 77
Body Protection: Ski Cross 88

C

Calculation of: Hand Timing 44; **Scores** 50
Camera: finish line - Ski Cross 84
Cancellation 54
Centre: line; Dual Moguls 75
Chief: of Scoring 32
Chief of: Gate Judges 33
Chief of: Competition 32; Course 32, 33; Inrun 32, 33; Jumps 32; Maintenance 32, 33; Press 32; Sound 32; Timing 32
Chief of: *Timing* 33
Chief of: *Scoring* 34
Chief of: *Press* 34
Chief of: *Sound* 34
Chief of: *Medical and Rescue Services* 34
Chief of: Course 34
Chief of: Scoring 49
Chief of Course 33, 41, 53
Chief of Scoring 40, 45, 47; signing the results 50
Chief of Sound 44
Chief of Timing 33
Chief Steward 32, 34
Chief Time Keeper 45
Communications 36, 43
Competition: area 42; **Definition of** 58; **Officials** 32; **Protocol and Procedures** 58; Secretary 32, 34
Competition Committee 32
Competition Format: **Team Competition** 93
Competitors: Advisory Committee 38; Aerialists not wearing their bibs 65; **Equipment, HalfPipe** 91; Mogul not wearing their bibs 72; **Responsibilities** 54
Connection Coach 40, 41, 82
Contact and Blocking: **Ski Cross** 87
Contact and Blocking: **Ski Cross** 87
Control Gate: Dual Moguls 75; Moguls number of 72; width 45
Course: Course Designer 32; Designer, Ski Cross 81; Halfpipe 92; **Setting, Ski Cross** 82; **Ski Cross** 81
Course Design: **Ski Cross** 81
Course Designer 33

D

DD Aerials, Freestyle Judging Manual 65
Definition of Different jumps: Dual Moguls 78
Degree of Difficulty 65; **Aerials** 65; Aerials maximum 39; truncated to two (2) decimal places 50
Determination of place: **Ski Cross** 84
Disqualification: **Ski Cross** 87
DJ 34, 44
DNF 57; Jury responsibility 57
DNS 55; Aerials 55; balk 57; **Did Not Start** 55; Dual Moguls 55; Final Run 55; Listed on Start list 55; Ski Cross 55, 85; **Start** 55; The Starter 47
Draw: Random Draw 47; separate draw 47; Ski Cross 83
DSQ 55; Helmet 56; Jury 55; no place point 55; Ski Cross 56
Dual Mogul: *Course, Characteristics* 75; **Site** 76; start 45, 46
Dual Mogul Course 75

E

Electric Timing 43, 44, 49; Start 43
Electronic Release Device 86
Entries 54, 55
Equipment 32, 33, 42, 43, 91; Aerials 43; **Helmet Aerials** 66; **Moguls** 73; Ski Cross 88; Ski stops 54

F

Final Ranking 68
Final Run 58
Finalists: Finals number of Finalists 48
Finals 50, 58; could not be conducted 54; six of 58
Finish 91, 92; **Determination of Finish** 49; **HalfPipe** 92
Finish Area 49; Aerial Site 64; Aerials and Halfpipe 49; Fencing 49; Mogul, Dual Mogul and Ski Cross 49; TD Inspection 36
Finish Line 49; Air Bumps 76; Dual Moguls 77; **HalfPipe** 92; layout 45; Moguls 72; Timing 43
Finish Official 32, 34, 45
First Aid 32
First Aid and Medical Service 35
First Turn: Ski Cross 82
FIS: Calendar 63, 71, 75; Calendar Fee 31; FIS Codes 50; Freestyle Committee 31; Medical Guide 35; Office notice of cancellation 54
FIS Codes 48
FIS Equipment Rules 88
FIS Freestyle Committee 31, 35, 61, 65
Flight plan 57; Upgrading Aerials 57
Floater: Aerials 64

Force Majeure 47, 55
Forerunners 74; Moguls 74
Form: Aerials 65
Format: Championship - Aerials 61
Four per heat: Ski Cross 84
Four Person Format: **Ski Cross** 88
Freestyle Course Standards Manual 36
Freestyle Judging Manual 50, 65, 73, 76, 77; Aerials Scoring 65; DD 65

G

Gap jumps, not permitted 81
Gate Judges 32, 33; Ski Cross 33
Gates: *Color of* 80; Consecutive 80; **Definition of, Ski Cross** 80; *Size of Ski Cross* 80

H

Halfpipe: **Site** 90
Hand Timing 44
Head Judge 39, 40, 62; Alternate 40; Appointment 30; Appointment by 40; Meetings 62; Member of Jury 40; Official Results 50; **Rights and Duties** 40
Height of: Timing Cells 43
Helmet: Dual Moguls 78; Moguls 73; wearing of by all competitors 55
Helmets: Ski Cross 88
Homologations Dual Moguls 75

I

Inrun 56, 64; markers 64
Inspection: Jury Aerials 64; Moguls 72
Insurance 62; Accident Insurance 54; Liability 62
Inverted flips: Moguls 74
Inverted manoeuvre: Limited to 3 somersaults 66

J

Judges 39, 47, 48, 50; Appointment 30; **HalfPipe** 91; **Judging Procedures** 40; **Meetings** 62; **number of** 39; Partition 40; Scorecards HalfPipe 92
Judges Stand 44; **HalfPipe** 91
Jump Shapers 40
Jury 42, 47, 50, 53, 54, 66, 72, 73, 74, 76; Advisory Committee non voting 41; Aerial Qualification 42; alter to finals only 58; appeals of decisions 54; Cancellation 54; Chief of Competition 32; **Composition** 38; Delayed Start 47; examination of Protest 53; inspection Dual Moguls 76; listed on start list 48; **meeting before the Team Captains meeting** 62; Mogul Course Inspection 72; Protests, in writing 53; reduction of training time 65; request for a rerun 56; Rerun 53

K

Knock Out Format: **Aerials** 67

L

Landing: Aerials 65
Layout: Mogul Course 71
left side 77
Light Beam 45; Dual Mogul 47; Mogul and Ski Cross 47
Loop 78; Moguls 74
Loss of Ski: **Aerials** 66
Loss of Ski(s) 78

M

Marginal lighting conditions: Mogul Competition 72
Medical and Service Personnel 42
Medical Service 32
Medical Support Requirements 35
Moguls: Air bumps 72; **Course** 71; *Mogul Site* 71, 72; **Pace Time** 73
Music: at all events 44; Stock music 44
Music at Freestyle Competitions 44

N

National Ski Association 30, 35, 37, 38, 50, 54; Aerial Qualifications 66; Appeals 54; Athletes Declaration 55; competition organiser 30; Insurance 62
Number of skis: **Ski Cross** 88

O

Obstruction by 56
Off axis 79; Jumps - Moguls 74
Official Notice Board 53; Protests 53
Official Results 49
Official Training 41; **Aerials** 65, 66; **Dual Mogul** 76; **HalfPipe** 90; **Moguls** 72
Officials' Expenses 31
Olympic Winter Games 43; Aerials 63; Judges 39; Moguls 71; TD 35
Organisation Committee: **Meetings** 62
Organiser: **Contract** 30
Organizational Meetings 62
Organizing Committee 30, 31, 32, 35, 36, 38, 40, 72; **Basic Costs** 31; **Composition** 30; Responsibility 30; Results 30; Services provided 30

P

Pace Time, Moguls 73
Postpone 72; Training, Dual Moguls 76
Protests 53, 54; **Appeals** 54; Course 53; Jury 53; Official Notice Board 53; Qualification 53; Reruns 53; The Jury 53; Time limit 54; Timing 53
Public Address System: **HalfPipe** 91; **Music** 44

Q

Qualification: Aerial licence 66; National Ski Association 66
Qualifications 58

R

Race Doctor 34
Reaction Time 43
Red course 46, 77
Red Course ready 46
Referee 32
Rerun: Jury 56; Obstruction 56; Starter 56; Timing Failure 56
Results: **Calculation & Announcement of Results** 49; Finals 50; FIS Office 30; **Official** 49; Official Information Required 50; Qualifications 50
Role of the Competition Committee 32

S

Scheduled start time 48
Scoring Procedures: **Aerials** 65; **Dual Moguls** 77; **Halfpipe** 92; **Moguls** 73
Seeding: Dual Moguls 77; **Ski Cross** 83

Separate start order 47
Six per heat, Ski Cross 85
Six Person Format: **Ski Cross** 88
Ski Cross: advance from round to round 83; **Correct Passage** 81; does not complete the course 84; Lane Colors R, G, B, Y 86; **Number of skis** 88; Reaction Time 43; Start Command 47; **Technical Data** 80; **Vertical Drop** 80
Ski Cross Finals Pairings 84
Ski Halfpipe 34, 50, 90
Ski Suit: Ski Cross 88
Ski Suits: **60mm Gap in Material** 88
SLOPESTYLE 69
Slopestyle course description 70
Special Procedures 68; **Aerials** 66; Moguls 73
Speed: **Dual Moguls** 77; Moguls 73
Start 33, 36, 44, 45, 46, 47, 79, 91; Access to 45; Aerial 64; Aerials 45; Aerials Three Phase Start 46; Communications to 43; **Delayed Start** 47; Dual Mogul 79; Electric timing 43; **HalfPipe** 92; Mogul 45; Ski Cross 45; *Start Groups* 47; start has been delayed 47; **Timing** 47; Warming hut 45
Start Area 45
Start Command 46; Dual Moguls 46; **HalfPipe** 92; Starter 46
Start Device 45; Dual Moguls 45, 79; **Ski Cross** 86; Ski Cross FIS Approval 87
Start Interval: **Ski Cross** 85
Start Lanes: **Ski Cross** 86
Start line: Dual Moguls 76; Moguls 72
Start List 47
Start Order 47; Team Captains' Meeting 47
Aerials 46
Start Procedure 46
Start Ramp: Ski Cross 86
Starter 34, 45, 47; Start Commands 45
Stop and refuse to jump, Aerials 56

T

TD 32, 35, 36, 38, 41, 42, 94; Accidents 61; Appointment 30; **Candidate Technical Delegate** 38; Duties 36; FIS Freestyle Committee 36; inspections 37; Jury 37; National Ski Association 38; Organizing Committee 37; **Qualifications** 35; Sign the Official Results 50; Technical Delegate 35
TD Candidate 38
Team Captains 32, 34, 41, 42, 45, 47, 48, 62; competition area 42; **Meeting** 62
Team Competition 93
Team Doctors 34
Team Size: Maximum Team Event 93
Technical Installations 43
Terrain Features: Jumps, Hips, Spins, Table Tops – Ski Cross 81; Rollers, Types of – Ski Cross 81; Ski Cross 81, 82
The Finish Referee 35
The Organiser 30, 32, 88
The Slopestyle course 69
The Start Referee 35
Thickness of ski boot soles: **Ski Cross** 88
Ties: **Chief of Scoring** 50; Judge-by-Judge comparison 50; Qualifications 50; **Tie Breaking** 50
Timing 32, 33, 43, 49; Electric Timing 44; Failure of Electronic Timing 49; **Hand Timing** 44; Light Beam, height 43; photo electric cells 43; *Protests* 53; **Start** 47
Timing and Data Area 44
Timing Equipment 43
Timing in Dual Moguls 43
Timing Systems Approval 43
Turns: **Dual Moguls** 76; Moguls 73

U

Unofficial Scores 49
Uphill Transportation, Aerials 64
Uprights: Dual Moguls 79; limited to 5 positions 66; manoeuvre; Aerials 67

V

Velocity Indicators: Aerials 64

W

Wind 46; measuring instruments 46; Velocity and Direction 46; Wind Indicator Aerials 64
Winner: Dual Moguls 59; Prize ceremonies 54; Rounds in Dual Moguls 75; Total Score in Finals 50
World Ski Championships 35, 43, 61, 63, 71

IIHF OFFICIAL RULE BOOK

2014 – 2018

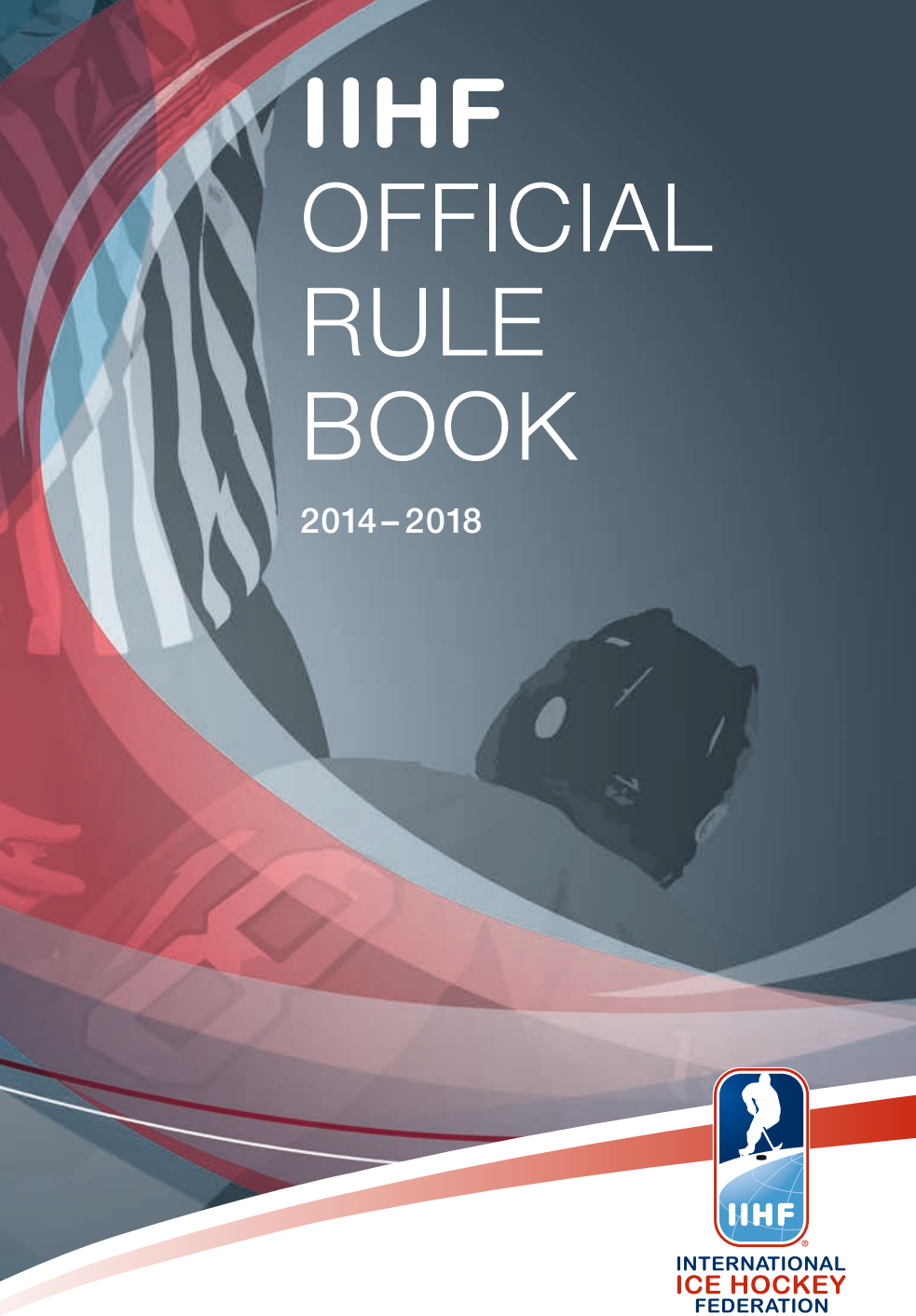

INTERNATIONAL ICE HOCKEY FEDERATION

No part of this publication may be reproduced in the English language or translated and reproduced in any other language or transmitted in any form or by any means electronically or mechanically including photocopying, recording, or any information storage and retrieval system, without the prior permission in writing from the International Ice Hockey Federation.

July 2015, 2nd Edition

© International Ice Hockey Federation

IIHF OFFICIAL RULE BOOK

2014–2018

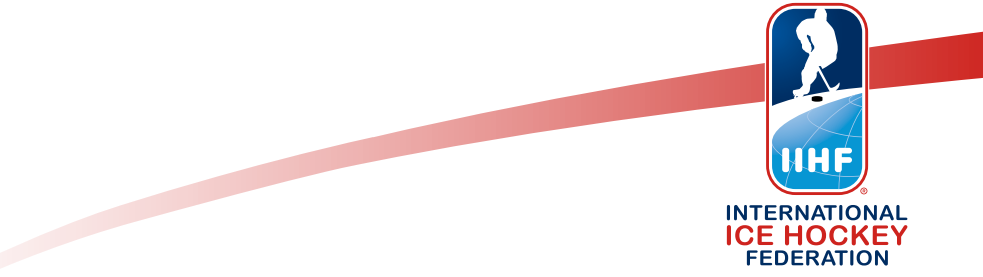

RULE 1	THE INTERNATIONAL ICE HOCKEY FEDERATION (IIHF) AS GOVERNING BODY	12
SECTION 1 – COMPETITION STANDARDS		**13**
RULE 2	GENDER PARTICIPATION	13
RULE 3	PLAYER ELIGIBILITY/AGE	13
RULE 4	ON-ICE OFFICIALS	13
RULE 5	PROPER AUTHORITIES AND DISCIPLINE	14
RULE 6	DOPING	14
RULE 7	TERMINOLOGY	14
SECTION 2 – THE RINK		**17**
RULE 8	ICE SURFACE/FIT TO PLAY	17
RULE 9	PLAYERS' BENCHES	17
RULE 10	PENALTY BOXES	18
RULE 11	OBJECTS ON ICE	18
RULE 12	STANDARD DIMENSIONS OF RINK	18
RULE 13	RINK BOARDS	20
RULE 14	PROTECTIVE GLASS	20
RULE 15	PROTECTIVE NETTING	21
RULE 16	DOORS	21
RULE 17	ICE SURFACE MARKINGS/ZONES	21
RULE 18	ICE SURFACE MARKINGS/FACEOFF CIRCLES AND SPOTS	22
RULE 19	ICE SURFACE MARKINGS/CREASES	23
RULE 20	GOAL NET	25
SECTION 3 – TEAMS AND PLAYERS		**26**
RULE 21	TEAM COMPOSITION	26
RULE 22	FORFEIT GAMES	26
RULE 23	INELIGIBLE PLAYER IN A GAME	26
RULE 24	PLAYERS DRESSED	27
RULE 25	TEAM PERSONNEL	27
RULE 26	TEAM OFFICIALS AND TECHNOLOGY	28
RULE 27	PLAYERS ON ICE DURING GAME ACTION	28
RULE 28	CAPTAIN AND ALTERNATE CAPTAINS	28
SECTION 4 – SKATERS' EQUIPMENT		**30**
RULE 29	DANGEROUS EQUIPMENT	30
RULE 30	ELBOW PADS	30
RULE 31	FACIAL PROTECTION & MOUTH GUARD	30
RULE 32	FLUORESCENT MATERIAL	31
RULE 33	GLOVES	31
RULE 34	HELMET	31
RULE 35	NECK AND THROAT PROTECTOR/SKATER	32

RULE 36	SHIN PADS	32
RULE 37	SKATES/SKATER	32
RULE 38	STICK/SKATER	32
RULE 39	TAPE	33
RULE 40	UNIFORMS/SKATER	33
RULE 41	MEASUREMENT OF A PLAYER'S EQUIPMENT	34
RULE 42	MEASUREMENT OF A SKATER'S STICK/ PENALTY-SHOT SHOOTOUT	35

SECTION 5 – PLAYING RULES/GENERAL		**37**
RULE 43	HOW THE GAME IS PLAYED	37
RULE 44	LENGTH OF PLAY	37
RULE 45	SCORECLOCK	37
RULE 46	WHISTLE	38
RULE 47	PUCK	38
RULE 48	WARMUP	38
RULE 49	PUCK IN PLAY	38
RULE 50	CHANGE OF ENDS	39
RULE 51	STARTING GAME ACTION	39
RULE 52	DETERMINING FACEOFF LOCATION/GENERAL	39
RULE 53	DETERMINING FACEOFF LOCATION/PENALTIES ASSESSED	40
RULE 54	DETERMINING FACEOFF LOCATION/INJURY	40
RULE 55	DETERMINING FACEOFF LOCATION/ DEFENDING ZONE	41
RULE 56	DETERMINING FACEOFF LOCATION/ CENTRE-ICE SPOT	41
RULE 57	DETERMINING FACEOFF LOCATION/ ATTACKING ZONE	42
RULE 58	PROCEDURE FOR CONDUCTING FACEOFFS	43
RULE 59	FALSE FACEOFFS	43
RULE 60	TELEVISION TIMEOUTS	44
RULE 61	TEAM TIMEOUT	44
RULE 62	OVERTIME PERIOD	45
RULE 63	PENALTY-SHOT SHOOTOUT	45

SECTION 6 – PLAYING RULES/STOPPAGES OF PLAY		**47**
RULE 64	INTERFERENCE BY SPECTATORS	47
RULE 65	ICING THE PUCK/HYBRID ICING	47
RULE 66	ICING THE PUCK/GAME SPECIFICS	48
RULE 67	PUCK OUT OF PLAY	49
RULE 68	PUCK ON DASHER	49
RULE 69	PUCK ON GOAL NET (BASE AND TOP)	49
RULE 70	PUCK OFF END NETTING	50
RULE 71	PUCK OUT OF SIGHT	50
RULE 72	PUCK OFF THE GOAL NET	51
RULE 73	PUCK STRIKING AN ON-ICE OFFICIAL	51

RULE 74	HAND PASS	51
RULE 75	HIGH STICKING THE PUCK/GAME ACTION	52
RULE 76	HIGH STICKING THE PUCK INTO THE GOAL NET	53
RULE 77	PROTECTIVE GLASS/DAMAGED	53
RULE 78	OFFSIDE	53
RULE 79	OFFSIDE SITUATIONS	54
RULE 80	FACEOFFS AFTER OFFSIDE	55
RULE 81	ONSIDE	55
RULE 82	DELAYED OFFSIDE	56
RULE 83	DELAYED OFFSIDE/HYBRID ICING	57
RULE 84	INTENTIONAL OFFSIDE	57
RULE 85	INJURED SKATER	58
RULE 86	INJURED ON-ICE OFFICIALS	58

SECTION 7 – PLAYING RULES/PLAYER CHANGES		**59**
RULE 87	DEFINING ON/OFF ICE	59
RULE 88	PLAYER CHANGE DURING GAME ACTION	59
RULE 89	ILLEGAL ACCESS OF OPPONENT'S PLAYERS' BENCH	59
RULE 90	PLAYERS' BENCH INSIDE BLUE LINE/OFFSIDE	59
RULE 91	PLAYER CHANGE DURING STOPPAGE	60
RULE 92	PLAYER CHANGE PROCEDURE	60
RULE 93	PLAYER CHANGE ON ICING CALLS	61

SECTION 8 – PLAYING RULES/GOALS		**62**
RULE 94	SCORING A GOAL	62
RULE 95	GOAL CREASE AS IT PERTAINS TO SCORING GOALS	63
RULE 96	GOALS WITH THE SKATE	63
RULE 97	DISALLOWING A GOAL/GAME ACTION	64
RULE 98	SCORING A GOAL/GOAL FRAME OFF	65
RULE 99	USE OF VIDEO-GOAL JUDGE TO DETERMINE GOALS	65

SECTION 9 – GAME PENALTIES/DURATION AND SITUATIONS		**67**
RULE 100	WHEN PENALTIES CAN BE CALLED	67
RULE 101	IMPLICATIONS OF PENALTIES	67
RULE 102	PENALTIES ON SCORECLOCK	68
RULE 103	PLAYING SHORT-HANDED	69
RULES 104–110	DURATION OF PENALTIES	69
RULE 104	DURATION OF PENALTIES/MINOR – BENCH MINOR	69
RULE 105	DURATION OF PENALTIES/MAJOR	69
RULE 106	DURATION OF PENALTIES/MINOR AND MAJOR	70
RULE 107	DURATION OF PENALTIES/MISCONDUCT	70
RULE 108	DURATION OF PENALTIES/MINOR AND MISCONDUCT	70
RULE 109	DURATION OF PENALTIES/GAME MISCONDUCT	71
RULE 110	DURATION OF PENALTIES/MATCH	71
RULE 111	PENALTY SITUATIONS	71

RULE 112	COINCIDENT PENALTIES	72
RULE 113	DELAYED START TIME OF PENALTIES	72
RULE 114	DELAYED PENALTY CALL	73
RULE 115	PENALTIES IN OVERTIME	74
SECTION 10 – DESCRIPTION OF GAME PENALTIES		**75**
RULE 116	ABUSE OF OFFICIALS	75
RULE 117	BENCH-MINOR	76
RULE 118	BITING	76
RULE 119	BOARDING	76
RULE 120	BROKEN STICK/PLAYING WITH – REPLACING	76
RULE 121	BUTT-ENDING	77
RULE 122	CHARGING	77
RULE 123	CHECKING FROM BEHIND	78
RULE 124	CHECKING TO THE HEAD OR NECK	78
RULE 125	CLIPPING	79
RULE 126	CLOSING HAND ON PUCK	79
RULE 127	CROSS-CHECKING	80
RULE 128	DANGEROUS EQUIPMENT	80
RULES 129–137	DELAY OF GAME	81
RULE 129	DELAY OF GAME/ADJUSTMENT OF EQUIPMENT	81
RULE 130	DELAY OF GAME/DISPLACED GOAL NET	81
RULE 131	DELAY OF GAME/FALLING ON THE PUCK	81
RULE 132	DELAY OF GAME/FREEZING THE PUCK UNNECESSARILY	82
RULE 133	DELAY OF GAME/GOAL CELEBRATION	82
RULE 134	DELAY OF GAME/LATE LINEUP	82
RULE 135	DELAY OF GAME/SHOOTING OR THROWING THE PUCK OUT OF PLAY	82
RULE 136	DELAY OF GAME/SUBSTITUTION AFTER AN ICING CALL	82
RULE 137	DELAY OF GAME/VIOLATION OF FACEOFF PROCEDURES	83
RULE 138	DIVING OR EMBELLISHMENT	83
RULE 139	ELBOWING	83
RULE 140	ENGAGING WITH SPECTATORS	83
RULE 141	FIGHTING	84
RULE 142	HEAD-BUTTING	85
RULE 143	HIGH-STICKING	85
RULE 144	HOLDING	85
RULE 145	HOLDING THE STICK	86
RULE 146	HOOKING	86
RULE 147	ILLEGAL STICK – STICK MEASUREMENT	86
RULE 148	INCORRECT ACCESS TO OR FROM PENALTY BOX	87
RULE 149	INJURED SKATER REFUSING TO LEAVE THE ICE	87
RULE 150	INTERFERENCE	87
RULE 151	INTERFERENCE ON A GOALTENDER	88

RULE 152	KICKING	89
RULE 153	KNEEING	89
RULE 154	LEAVING THE PENALTY BOX PREMATURELY	89
RULE 155	PLAYING WITHOUT A HELMET	90
RULE 156	PULLING HAIR, HELMET, CAGE	90
RULE 157	REFUSING TO START PLAY	90
RULE 158	ROUGHING	91
RULE 159	SLASHING	91
RULE 160	SLEW-FOOTING	91
RULE 161	SPEARING	92
RULE 162	SPITTING	92
RULE 163	TAUNTING	92
RULE 164	TEAM OFFICIAL ENTERING THE PLAYING AREA	92
RULE 165	THROWING A STICK OR OBJECT	92
RULE 166	TOO MANY MEN	93
RULE 167	TRIPPING	94
RULE 168	UNSPORTSMANLIKE CONDUCT	94
RULE 169	ILLEGAL HIT (WOMEN)	96

SECTION 11 – PENALTY SHOTS AND AWARDED GOALS 97

RULE 170	PENALTY SHOTS AND PENALTY-SHOT SHOOTOUT AS PART OF THE GAME	97
RULE 171	AWARDING A PENALTY SHOT/BREAKAWAY	97
RULE 172	AWARDING A PENALTY SHOT/INTERFERENCE OR THROWING OBJECTS	98
RULE 173	AWARDING A PENALTY SHOT/LAST TWO MINUTES OF REGULATION/OVERTIME	98
RULE 174	AWARDING A PENALTY SHOT/PLAYER DISPLACING GOAL NET	99
RULE 175	AWARDING A PENALTY SHOT/SKATER FALLING ON PUCK	99
RULE 176	PENALTY-SHOT PROCEDURE/OVERVIEW	99
RULE 177	PENALTY-SHOT PROCEDURE/TAKING THE SHOT	100
RULE 178	PENALTY-SHOT PROCEDURE/SPECIFIC SITUATIONS	101
RULE 179	AWARDED GOALS	102
RULE 180	AWARDED GOALS/BLOCKING THE GOAL NET	102

SECTION 12 – RULES SPECIFIC TO GOALTENDERS 103

RULE 181	GOALTENDER WARMUP	103
RULE 182	GOALTENDER AS CAPTAIN OR ALTERNATE CAPTAIN	103
RULE 183	PROTECTION OF GOALTENDER	103
RULE 184	GOALTENDER AND GOAL CREASE	104
RULE 185	GOALTENDER AND GOAL CREASE/GOAL ALLOWED	104
RULE 186	GOALTENDER AND GOAL CREASE/GOAL DISALLOWED	104

RULE 187	GOALTENDER EQUIPMENT/GENERAL	105
RULE 188	BLOCKING GLOVE/GOALTENDER	106
RULE 189	CHEST AND ARM PROTECTION/GOALTENDER	106
RULE 190	FACEMASK/GOALTENDER	106
RULE 191	KNEE PROTECTION/GOALTENDER	106
RULE 192	NECK AND THROAT PROTECTOR/GOALTENDER	107
RULE 193	PADS/GOALTENDER	107
RULE 194	PANTS/GOALTENDER	107
RULE 195	SKATES/GOALTENDER	107
RULE 196	STICK/GOALTENDER	107
RULE 197	SWEATERS/GOALTENDER	108
RULE 198	THROAT PROTECTOR/GOALTENDER	108
RULE 199	UNIFORMS/GOALTENDER	109
RULE 200	GAME ACTION/GOALTENDER	109
RULE 201	THROWING THE PUCK FORWARD/GOALTENDER	109
RULE 202	GOALTENDER SUBSTITUTIONS	109
RULE 203	ILLEGAL SUBSTITUTION/GOALTENDER	110
RULE 204	FACEOFFS/GOALTENDER	110
RULE 205	ICING AND THE GOALTENDER	110
RULE 206	TIMEOUTS AND THE GOALTENDER	111
RULE 207	GOALTENDER PENALTIES/OVERVIEW	111
RULE 208	GOALTENDER PENALTIES/DESCRIPTION	112
RULE 209	BEYOND CENTRE RED LINE/GOALTENDER	112
RULE 210	BROKEN STICK/GOALTENDER	112
RULE 211	DANGEROUS EQUIPMENT/GOALTENDER	113
RULES 212–217	DELAY OF GAME/GOALTENDER	113
RULE 212	DELAY OF GAME/GOALTENDER – ADJUSTMENT OF EQUIPMENT	113
RULE 213	DELAY OF GAME/GOALTENDER – DISPLACED GOAL FRAME	113
RULE 214	DELAY OF GAME/GOALTENDER – FREEZING THE PUCK ALONG BOARDS	114
RULE 215	DELAY OF GAME/GOALTENDER – GOING TO PLAYERS' BENCH DURING STOPPAGE	114
RULE 216	DELAY OF GAME/GOALTENDER – REMOVING FACEMASK	114
RULE 217	DELAY OF GAME/GOALTENDER – SHOOTING OR THROWING THE PUCK OUT OF PLAY	114
RULE 218	DROPPING THE PUCK ON GOAL NETTING/ GOALTENDER	115
RULE 219	FIGHTING/GOALTENDER	115
RULE 220	HOLDING THE PUCK IN GOAL CREASE/ GOALTENDER	115
RULE 221	HOLDING THE PUCK OUTSIDE GOAL CREASE/GOALTENDER	116
RULE 222	ILLEGALLY BLOCKING GOAL NET OR PILING SNOW/GOALTENDER	116

RULE 223	LEAVING GOAL CREASE DURING PLAYER CONFRONTATION/GOALTENDER	116
RULE 224	TOO MANY MEN – GOALTENDER	117
RULE 225	PENALTY SHOTS/FOULS BY A GOALTENDER	117
RULE 226	AWARDED GOALS/FOULS BY A GOALTENDER	117

SUMMARY OF PENALTIES **118**

APPENDIX 1 – RECORDING STATISTICS **122**

GOALS AND ASSISTS	122
EMPTY-NET GOAL	122
EVEN-STRENGTH GOAL	122
EXTRA-ATTACKER GOAL	122
FACEOFF WIN/LOSS	122
GAME-WINNING GOAL	122
GOALTENDER LOSS	123
GOALTENDER WIN	123
GOALS AGAINST	123
GOALS AGAINST AVERAGE	123
OWN GOAL	123
PENALTY MINUTES BY NUMBERS	123
PLUS/MINUS	123
POINTS	123
POWER-PLAY GOAL	123
SAVE PERCENTAGE	124
SHORT-HANDED GOAL	124
SHOT ON GOAL	124
SHUTOUT	124
TIME ON ICE	124

REFEREE AND LINESMEN SIGNALS **125**

REFEREE SIGNALS	126
REFEREE SIGNALS (WOMEN)	134
LINESMEN SIGNALS	135

INDEX **137**

NOTES **144**

RULE BOOK

RULE 1 – THE INTERNATIONAL ICE HOCKEY FEDERATION (IIHF) AS GOVERNING BODY

i. The IIHF consists of member nations which, when they join, recognize the need to participate under a codified system of rules based on sportsmanship, regardless of level of play or location of game.

ii. The rules of the IIHF are intended to promote skill and athleticism in a safe environment. Violations of these rules are dealt with during game action by on-ice officials. More serious violations may be further addressed after the game by proper authorities in accordance with IIHF By-Laws and Disciplinary Code.

iii. A player, official, team official, or member of any national association connected to competition manipulation will be disciplined based on the IIHF's Code of Conduct.

iv. Players who compete for their member national associations in an IIHF event do so with the understanding and respect of these rules and agree to abide by them at all times.

v. The IIHF Official Rule Book is applicable to all IIHF competitions, Olympic competitions and qualifications thereto and all other international games as established by the IIHF and as defined by IIHF Bylaw 1300.

SECTION 1 – COMPETITION STANDARDS

OVERVIEW – Standards of play ensure fairness of competition at all levels. These rules recognize the need for a level playing field and the responsibility of member national associations, players, and officials to adhere to these standards.

RULE 2 – GENDER PARTICIPATION

i. For IIHF competitions, no male player may participate in a women's event, and no female player may participate in a men's event.

RULE 3 – PLAYER ELIGIBILITY/AGE

i. For age-specific tournaments, notably U18 and U20, there is both a minimum and a maximum age for player eligibility. The minimum age is 15.

ii. A player participating in the 2015 U20 must have been born between January 1, 1995 and December 31, 2000. For the 2016 U20, the dates are January 1, 1996 and December 31, 2001. For the 2017 U20, the dates are January 1, 1997 and December 31, 2002. For the 2018 U20, the dates are January 1, 1998 and December 31, 2003.

iii. A player participating in the 2015 U18 must have been born between January 1, 1997 and December 31, 2000. For the 2016 U18, the dates are January 1, 1998 and December 31, 2001. For the 2017 U18, the dates are January 1, 1999 and December 31, 2002. For the 2018 U18, the dates are January 1, 2000 and December 31, 2003.

RULE 4 – ON-ICE OFFICIALS

For all information regarding on-ice officials, their duties, equipment, etc., see the IIHF's Officiating Procedural Manual.

i. All decisions made by on-ice officials are based on their discretion in understanding, adjudicating, and interpreting this rule book in an unbiased manner.

ii. Either the three-official system (one referee and two linesmen) or the four-official system (two referees and two linesmen) is used in all IIHF championships, tournaments, and international games involving national teams. The duties of the referees and linesmen are the same in either system.

iii. Member national associations have the authority to use the two-man-official system (two on-ice officials working as both referees and linesmen) or other official system in games which are completely under their jurisdiction.

iv. The video-goal judge system is mandatory only for specific IIHF competitions.

RULE 5 – PROPER AUTHORITIES AND DISCIPLINE

i. "Proper Authorities" refers specifically to the immediate governing body of the game(s) being played. In addition to the on-ice officials, every game at IIHF championships and events is overseen by a referee supervisor and possibly a disciplinary panel or representative thereof. Actions which show a flagrant disregard for the rules of play may be dealt with after the game by proper authorities.

ii. The function and duty of proper authorities is outlined in the IIHF's Disciplinary Code.

RULE 6 – DOPING

i. Membership in the IIHF includes acceptance of the World Anti-Doping Code and a requirement that the policies, rules, and programs of member national associations are in compliance with the code.

ii. Protocol and details of doping standards and procedures are outlined in the IIHF's Medical Regulations.

RULE 7 – TERMINOLOGY

AGE CATEGORY – Refers to a player's status for an entire hockey season (i. e., a player in the Under-18 age category for a particular season is required to abide by rules pertaining to Under-18 all year, regardless in what event or tournament he is competing)

AGGRESSOR – A player in a confrontation who throws punches at an opponent who is either unwilling or unable to defend himself.

ATTACKING HALF/DEFENDING HALF – The division of the playing surface into two equal parts using the centre red line as the halfway point. The team that is closest to its own goal net is in the defending half while the team farther from its own goal is in the attacking half.

AT LEAST A MINOR – If a description of a penalty includes the phrase "at least a minor," this infraction can also be assessed as a major and automatic game misconduct or as a match penalty.

BREAKAWAY – Any situation during game action which meets all of these criteria: (1) An attacking player is in control of the puck or in obvious position to gain control of a loose puck and skate in alone on the goal-tender; (2) The attacking player has no opponent between him and the opposing goal net; (3) The puck is completely outside the defending zone blue line of the attacking player; (4) The attacking skater has a reasonable scoring opportunity.

BROKEN STICK – A stick that is not fully intact, has a broken blade or shaft, or is no longer whole.

CAGE (SKATER) – A full facemask, attached to the skater's helmet, which covers the entire face.

COACH – A coach is a team official in charge of all decisions related to how the team plays during a game, including team strategy, player changes, and naming players to serve goaltender penalties and bench-minor penalties and participate in the penalty-shot shootout. The act of coaching during a game (starting two hours before opening faceoff until the final buzzer of the game, including any overtime and/or penalty-shot shootout) involves any and all direct and/or indirect communication, through any means, with team officials and on-ice officials relating to any direct and/or indirect aspect of the game.

CONFRONTATION – Any incident in which opponents initiate physical contact in an unsportsmanlike manner.

CONTROL/POSSESSION OF THE PUCK – Control means extended possession of the puck.

- Control of the puck means a player who is stickhandling with the puck or using his hands or feet to maintain possession of the puck. If the puck is touched by another player or his equipment, or hits the goal or goes free in any manner, the player is no longer considered to be in control of the puck.
- Possession of the puck refers to the player who is stickhandling with the puck, intentionally directs the puck to a teammate, or freezes the puck. Any accidental contact or deflection off an opponent, goal frame, or boards does not constitute possession. The last skater to touch the puck is considered in possession of it, and he may be checked provided the contact is legal and occurs during or immediately after he has lost possession of the puck.

FACEMASK (GOALTENDER) – Either a skater's helmet with a cage attached or a goaltender's head and face protector.

GAME ACTION – Play when the scoreclock is running.

GOAL LINE/ICING LINE – The end red line that extends the width of the ice is divided into two parts. The section of that line between the goal posts is called the goal line, and the two sections that extend from the goal posts towards the side boards are called the icing line. For references to the entire line, the term icing line will be used.

MINOR/BENCH MINOR PENALTY – A minor penalty is a two-minute penalty assessed to a specific player. A bench minor is also a two-minute

penalty assessed to the team without a specific player identified. Bench-minor penalties can be served by any skater, designated by the coach through the captain, who was on the ice at the time the whistle stopped play or otherwise specified by these rules.

ON-ICE OFFICIAL – Either a referee or linesman.

PLAYERS – Refers to both skaters (defencemen and forwards) and goal-tenders.

PLAYING AREA – The three-dimensional area of the ice surface surrounded by the boards and protective glass but not limited to the height of the glass and boards.

PROPER AUTHORITIES – The governing or adjudicating body which oversees conduct of players and team officials during a game.

TEAM OFFICIAL – Any member of a team who is not a dressed player for a game, including (but not limited to) the coach, assistant coaches, equipment and training staff, etc.

TERRITORIAL ADVANTAGE – Any decision which moves a faceoff closer to the defending zone is made to ensure there is no territorial advantage to the offending team.

SECTION 2 – THE RINK

OVERVIEW – Ice hockey is played on an enclosed sheet of ice with markings specific to the rules of play. The rink must be made fair and safe for players and set up in a way which also considers spectator safety to be of paramount importance. The only markings allowed on any and all parts of the rink are those outlined in these rules or in the IIHF's Marketing Regulations.

Any deviations from these requirements for any IIHF competition require IIHF approval. For arena guidelines and facility requirements, see relevant manuals.

RULE 8 – ICE SURFACE/FIT TO PLAY

i. Ice hockey must be played on a white ice surface known as a rink. It must be of a quality deemed fit to play by the on-ice officials in charge of the game.

ii. The ice surface must be prepared with water and chemicals to a consistent quality in all areas and must be properly frozen by either a reliable system of refrigeration to ensure stable temperature and density or by natural causes.

iii. If, prior to or during the playing of a game, any section of the ice or rink becomes damaged, the on-ice officials will immediately stop the game and ensure the necessary repairs are made before game action resumes.

iv. If the repairs delay the game unduly, the referee has the option to send the teams to their respective dressing rooms until the rink is deemed fit to play. If the problem cannot be solved in a short period of time or if any section of the ice or rink is of a quality that makes playing the game dangerous, the referee has the right to postpone the game until such a time as the ice or rink can be properly made fit to play.

v. If any lengthy delay occurs within five minutes of the end of a period, the referee has the option to send the teams to their respective dressing rooms to begin the intermission immediately. The rest of the period will be played after the repairs and resurfacing of the ice has been completed and the full intermission time has elapsed. When play resumes, teams will defend the same goal as before play was postponed, and at the end of the period they will change ends and begin playing the ensuing period without delay.

vi. If the playing area is affected by fog or other opaque air, the referee will not permit game action to take place until the air in the arena is suitably clear for players and fans to experience a safe environment.

RULE 9 – PLAYERS' BENCHES

i. Although the players' benches are not a part of the ice surface, they are considered a part of the rink and are subject to all rules pertaining to the ice surface.

ii. The only people allowed on or at the players' benches are the dressed players and not more than eight team officials.
iii. Both players' benches must be of the same dimensions and quality, offering advantage to neither team in any manner.
iv. Each players' bench must start 2.0 metres (6' 6¾") from the centre red line and be 10 metres (32' 9¾") wide and 1.5 metres (5') deep.
v. Each players' bench must have two doors, one at either end.
vi. The players' benches must be located on the same side of the rink, opposite their respective penalty boxes and the scorekeeper's bench.
vii. Teams must use the same bench for the duration of a game.
viii. Players' benches must be enclosed on all three sides from spectators, the only open-air side being the one with direct access to the ice for the players themselves.
ix. The designated home team is entitled to its choice of players' bench.

RULE 10 – PENALTY BOXES

i. A penalty box, one for each team, must be situated on either side of the scorekeeper's bench and across from their respective players' benches. Each box must be of the same size and quality, offering advantage to neither team in any manner.
ii. Teams must use the penalty box opposite their players' bench and must use the same penalty box for the duration of a game.
iii. Each penalty box must have only one door for both entry and exit and must be operated only by the penalty-box attendant.
iv. Only the penalty-box attendant, penalized skaters, and game officials are allowed access to the penalty boxes.
v. Both penalty boxes must be situated in the neutral zone.

RULE 11 – OBJECTS ON ICE

i. The ice surface is intended only for players and on-ice officials. Any objects on the ice that are not directly related to them or their equipment, or the puck, are strictly forbidden. Any damage to the playing facilities by any means will result in the immediate stoppage of game action. Play will not resume until the ice is clear of these objects and the playing area ready for game action.

RULE 12 – STANDARD DIMENSIONS OF RINK

i. For top-level IIHF competitions, the recommended dimensions of the rink are 60 metres (197') long and 25–30 metres wide (82'–98' 5").
ii. The corners of the rink must be rounded in the arc of a circle with a radius of 7.0 to 8.5 metres (23'–28').
iii. In countries where the standards set out in Rules 12-i and 12-ii are not possible, other dimensions are allowed so long as they are approved by the IIHF before the competition or game is played.

iv. For IIHF World Championship tournaments, the official dimensions must be 60 metres (197') long and 30 metres (98' 5") wide.

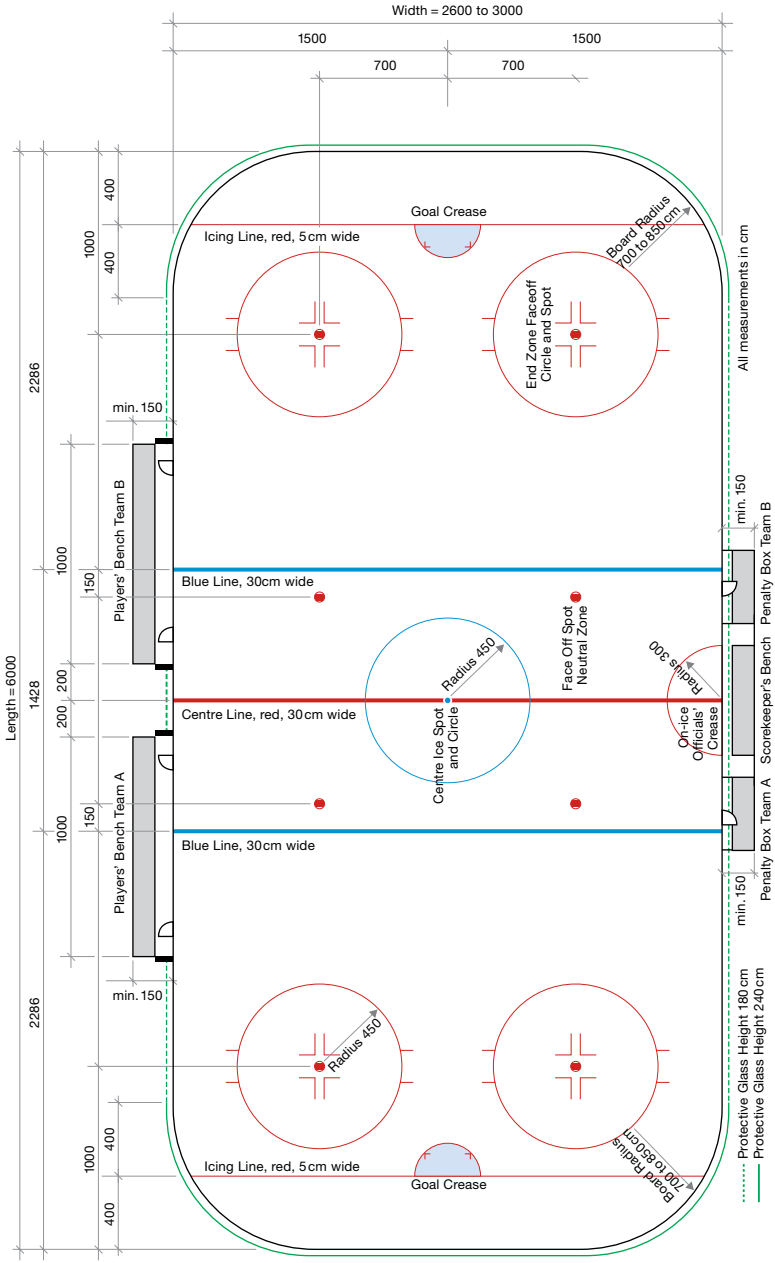

RULE 13 – RINK BOARDS

i. The rink must be contained within an enclosure known as boards which are made out of sections of wood or plastic and be painted white.

ii. The space between the panels which comprise the boards should be no more than 3 mm (⅛").

iii. The boards must be constructed in such a manner that the surface facing the ice must be smooth and free of any obstruction that could cause injury to players or unnaturally alter the course of a puck.

iv. The height of the boards should be 107 cm (42") from the ice surface.

v. Affixed to the bottom of the boards must be a yellow kick plate which extends around the entire circumference along the ice. It should be 15–25 cm (6"–10") high.

vi. Affixed to the top of the boards must be a blue dasher which extends around the entire circumference of the boards and marks the area where the boards end and the protective glass begins. The dasher should be 110 cm (43 5⁄16") from the concrete flooring under the ice.

RULE 14 – PROTECTIVE GLASS

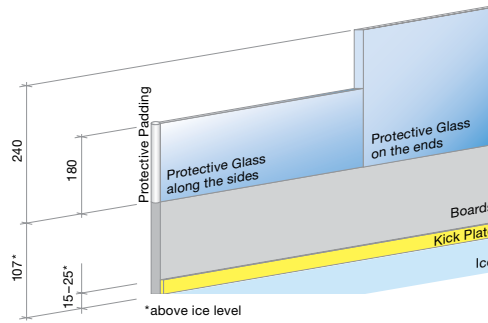

All measurements in cm

i. Panes of Plexiglas or similar acrylic material that are 12 mm–15 mm (½"–⅝") thick and both transparent and of high durability must be inserted into and affixed to the top of the boards. The glass must be aligned using stanchions which allow the sections to be flexible. This is an obligatory component for IIHF competitions.

ii. The protective glass must be 2.4 metres (7' 10 ½") high behind the goals and must extend at least 4.0 metres (13' 1 ½") from the icing line towards the blue line. The glass must be 1.8 metres (5' 11") high along the sides except in front of the players' benches.

iii. There is no protective glass permitted in front of the players' benches, but there must be protective glass of similar height outlined in 14-ii behind and along the sides of the players' benches and penalty boxes. Where the glass deviates from the boards there must be protective padding extending its full height.

iv. The protective glass and fixtures used to hold the boards in position must be mounted on the side away from the playing surface.
v. The gaps between the panels of protective glass must not be more than 5 mm (3⁄16").
vi. No openings or holes are allowed anywhere along the full circumference of the protective glass with the exception of a round hole 10 cm (4") in width in front of the scorekeeper's bench.
vii. The protective glass must be installed in such a way that one sheet can be replaced without compromising the integrity of any others.

RULE 15 – PROTECTIVE NETTING

i. Protective netting of a suitable height must be suspended above the end-zone protective glass behind both goals and must extend around the rink at least to where the icing line meets the boards.
ii. Protective netting behind both goals is an obligatory component for IIHF competitions.

RULE 16 – DOORS

i. All doors allowing access to the ice surface must swing inwards, towards the spectator area.
ii. The gaps between the doors and the boards must not be more than 5 mm (3⁄16").

RULE 17 – ICE SURFACE MARKINGS/ZONES

i. The ice surface must be divided lengthwise by five lines marked on the ice surface, extending completely across and continuing vertically up the boards to the dasher: icing line, blue line, centre red line, blue line, icing line.
ii. The middle three lines mark the three zones of the rink and are referred to as the defending zone, the neutral zone, and the attacking zone. The zones will be established as such: icing line to blue line, blue line to blue line, blue line to icing line, as measured from the middle of each line.
iii. The centre red line divides the length of the rink exactly equally. It must be 30 cm (12") wide and extend up the kick plate and up the full height of the boards to the dasher. In case of advertising allowed on the boards, the lines must be marked at least on the kick plate.
iv. The two icing lines must be marked 4.0 metres (13' 1 ½") from the flat and middle sections of the end boards (i.e., not the curved sections) at both ends of the rink and must be 5 cm (2") wide.
v. The blue lines must be 22.86 metres (75') from the flat and middle sections of the end boards at both ends of the rink and be 30 cm (12") wide. They must extend up the kick plate and onto the boards. In case of advertising allowed on the boards, the lines must be marked at least on the kick plate.

vi. For open air rinks, all lines must be 5 cm (2") wide.

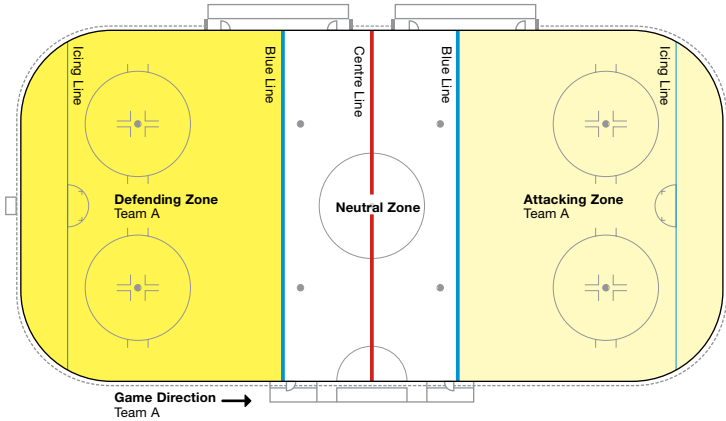

RULE 18 – ICE SURFACE MARKINGS/FACEOFF CIRCLES AND SPOTS

i. There must be nine faceoff spots on the ice. These are only places at which an on-ice official can drop the puck to begin game action.

ii. All faceoff spots must be red except for the one at centre ice which must be blue.

iii. A circular spot 30 cm (12") in diameter must be marked exactly in the centre of the ice surface. With this spot as a centre, a circle with a radius of 4.5 metres (14' 9 ¼") must be marked with a blue line 5 cm (2") wide. This constitutes the centre faceoff circle.

iv. A total of four faceoff spots 60 cm (24") in diameter must be marked in the neutral zone. There must be two such spots 1.5 metres (5') from each blue line. These faceoff spots should be the same distance from an imaginary straight line running from the centre of both goal lines as the end-zone faceoff spots.

v. A total of four faceoff spots 60 cm (24") in diameter and red circles 5 cm (2") wide with a radius of 4.5 metres (14' 9 ¼") from the centre of the faceoff spot must be marked on the ice in both end zones and on both sides of each goal. On either side of the end zone faceoff spots must be marked a double "L".

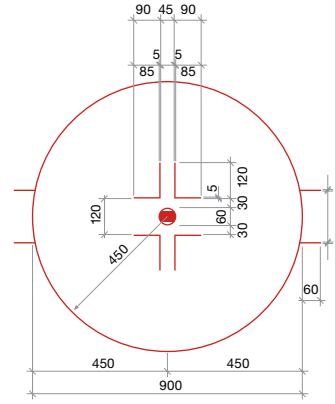

All measurements in cm

vi. The location of the end zone faceoff spots must be fixed along a line 6 metres (19' 8 ½") from each icing line. Parallel to this, mark two points 7 metres (23') on both sides of a straight line drawn from the centre of one goal line to the other. Each point will be the centre of the end faceoff spot.

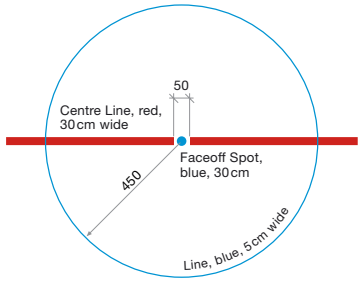

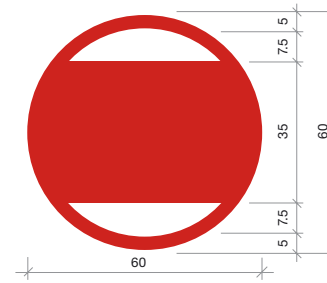

All measurements in cm

RULE 19 – ICE SURFACE MARKINGS/CREASES

i. There are three creases on the ice: one for each goaltender in front of either goal net and one at the boards by the scorekeeper's bench for on-ice officials.

ii. The red, on-ice officials' crease must be marked on the ice in a semi-circle 5 cm (2") wide with a radius of 3.0 metres (9' 10") immediately in front of the scorekeeper's bench. Players are not allowed in this area during stoppages of play when on-ice officials are in consultation with each other or reporting to off-ice officials.

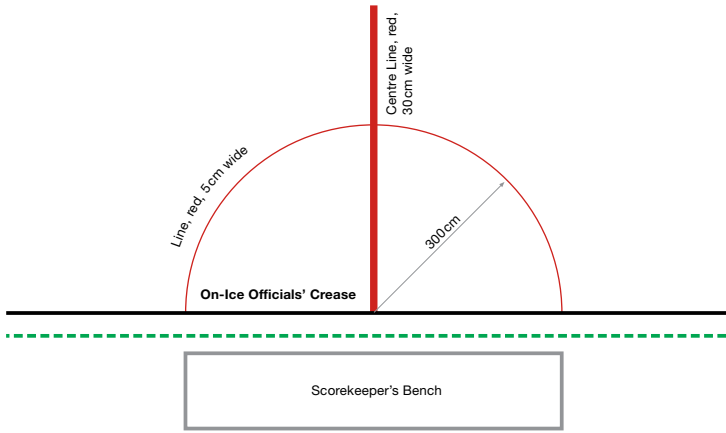

iii. In front of each goal net a goal-crease area must be marked by a red line, 5 cm (2") wide.

iv. The goal-crease area must be painted light blue, but inside the goal-net area from the goal line to the back of the goal net must be white.

v. The goal crease is a three-dimensional space and includes the air above the markings on ice up to the top of the crossbar.

vi. The goal crease must be marked as follows:

1. A red semi-circle 180 cm (71") in radius and 5 cm (2") in width must be drawn using the centre of the goal line as the centre point;
2. A red, “L”-shaped marking of 15 cm (6") in length (each line) must be added at each front corner;
3. The location of the “L” is measured by drawing an imaginary line 122 cm (48') from the goal line to the edge of the semi-circle.

vii. The measurements of all creases must be taken from the outside edge of the lines such that the full thickness of the lines is considered part of the crease.

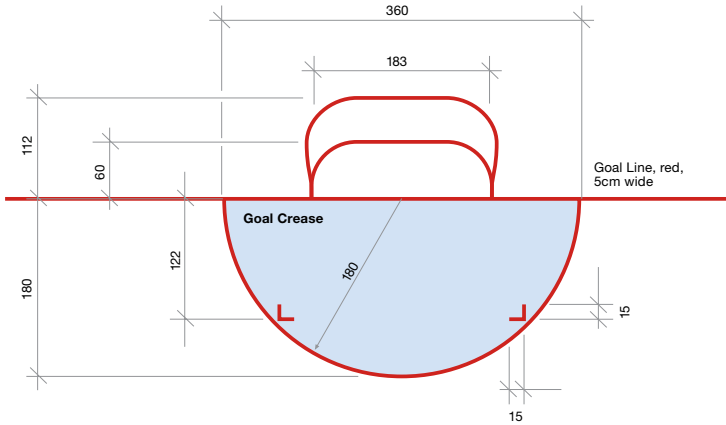

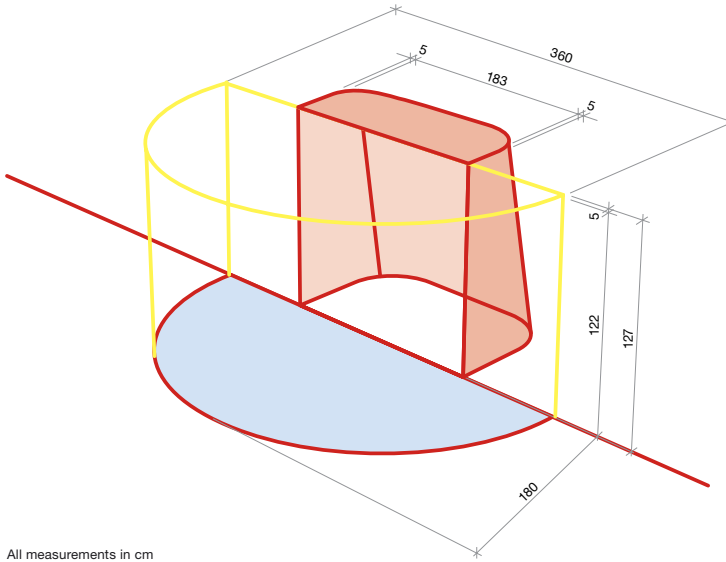

All measurements in cm

RULE 20 – GOAL NET

i. Each rink must have two goal nets, one at either end of the rink.
ii. The goal net is comprised of a goal frame and netting.
iii. The open end of the goal net must face centre ice.
iv. Each goal net must be located in the centre of the icing line at either end and must be installed in such manner as to remain stationary during the progress of the game. For top-level IIHF competitions, flexible goal pegs to hold the goal frame in place but which displace the goal net from its moorings upon significant contact are mandatory. These are strongly recommended for other competitions. The holes for the goal pegs must be located exactly on the icing line.
v. The goal posts must extend vertically 1.22 metres (4') above the ice surface and be 1.83 metres (6') apart (internal measurements). The goal posts and crossbar that form the tubular steel goal frame must be of a specified design with a diameter of 5 cm (2").
vi. The goal posts and crossbar must be red. All other parts of the net and frame must be white.
vii. The goal posts and crossbar must be completed by a white frame inside the base of the goal frame along the ice and top extending from post to post towards the end boards and supporting the netting, the deepest point of which must be 0.60–1.12 metres (2'–3'8").
viii. A netting of durable white nylon cord must be attached securely over the entire back of the goal frame in such a manner as to trap the puck in the goal net after it has entered and to prevent the puck from entering the goal net in any way other than in front.
ix. On-ice officials are required to check the netting before the start of each period of play. If they find any damage to the netting, game action cannot begin until the necessary repairs have been made.
x. The inside parts of the supports of the white frame, other than the goal posts and the crossbar, must be covered by white padding. The padding of the base frame must start not less than 10 cm (4") from the goal post and must be attached in a manner that does not restrict the puck from completely crossing the goal line.

SECTION 3 – TEAMS AND PLAYERS

OVERVIEW – A hockey game is contested between two teams which play under the direction of on-ice officials.

For consistency, all references in this rule book are in the masculine (he), but all rules apply equally to women's hockey except where noted.

RULE 21 – TEAM COMPOSITION

i. For a team to play a game it must be able to put on the ice at least five skaters and one goaltender at the beginning of the game.

RULE 22 – FORFEIT GAMES

i. If both teams are on the ice and one team refuses to play for any reason, the referee will warn the captain of the unwilling team that it must begin play within 30 seconds. If the team still refuses to play, the referee will assess it a bench-minor penalty. If there is a recurrence or continuance of the same incident, the referee will stop the game and report the incident to the proper authorities.
ii. If a team is not on the ice and fails to go on the ice to start play when ordered by the referee through the captain, manager, or coach, the referee will allow the refusing team not more than two minutes to resume play. If the team resumes play within those two minutes, it will be assessed a bench-minor penalty. If the team still refuses to go on the ice, the referee will stop the game and report the incident to the proper authorities.
iii. A team that refuses to begin play with the prescribed number of players on ice will forfeit the game to its opponent.
iv. A team will forfeit the game to its opponent if it cannot place the required number of players on the ice during the course of a game because of penalties and injuries.
v. If a team declines to participate in the penalty-shot shootout, its opponent will be awarded the win.

RULE 23 – INELIGIBLE PLAYER IN A GAME

i. A player must meet the criteria of both the IIHF and his member national association before he can play in a game. Specifically, he must meet the nationality and age requirements and be listed in the pre-tournament, pre-event, or pre-game roster of players as well as the game sheet.
ii. The determining factor for a player's eligibility is his name (not sweater number) being correctly listed in the lineup.
iii. No goal will be allowed by a team during a game if one of its players on the ice at the time his team scores is ineligible and the referee has

been notified of the error prior to the ensuing faceoff at centre ice immediately after the goal. All previous goals by the ineligible player's team will be allowed.

iv. If a player is assessed a penalty, and during the penalty he is found to be an ineligible player, he will be removed from the game and a skater designated by the coach through the captain must serve the remainder of the penalty.

v. If a player is found to be ineligible during a game he will be removed immediately without penalty.

vi. All cases regarding an ineligible player will be reported to the proper authorities.

RULE 24 – PLAYERS DRESSED

i. Sixty minutes before the start of the game, a representative from each team must provide the scorekeeper with a lineup (list of names and corresponding sweater numbers for players dressed), including the names of the captain and alternate captains.

ii. In IIHF tournaments, not later than two minutes before the start of a game, a representative from each team must confirm the lineup, but players may be added or deleted up to the opening faceoff.

iii. With the exception of a third goaltender, no changes or additions are allowed once the game has started.

iv. No staff member (coach, assistant coach, general manager, or other team official) is allowed onto the ice without the consent of an on-ice official except in the case of attending to an injured player.

v. Each team is allowed to dress a maximum of 20 skaters and two goaltenders for a game.

vi. All players must have a player's stick and player's skates and be wearing full equipment in order to be considered eligible to play in a game. Full equipment consists of sticks, skates, protective equipment, and team uniform.

vii. All protective equipment must be worn entirely under the uniform except gloves, helmets, and goaltender's pads.

viii. No player is allowed to warm up on ice at the end of a period or at any stoppage of play.

ix. Only eligible players are allowed to be listed on the lineup sheet and play in a game.

x. Players who are registered for a tournament or event but who are not listed on the game sheet are allowed to participate in the pre-game warmup.

RULE 25 – TEAM PERSONNEL

i. Every team must have at least one staff member behind the bench to act as coach and at least one qualified trainer or medical expert to treat players in case of injury.

RULE 26 – TEAM OFFICIALS AND TECHNOLOGY

i. No team official who stands at or near the players' bench during the game is allowed to utilize any form of technology except for radio-type contact with an assistant coach in the press box. This includes, but is not limited to, video apparatus, computers, smart phones, iPads, or other forms of electronic assistance or consultation.

RULE 27 – PLAYERS ON ICE DURING GAME ACTION

i. Game rules will not allow for a team to have fewer than four players (one goaltender and three skaters, resultant of penalties) or more than six players (one goaltender and five skaters or six skaters) on the ice during game action.
ii. Skaters may move about freely in any manner and play whatever positions they wish during game action, but the six standard positions of play are goaltender, left defence, right defence, centre, left wing, and right wing.
iii. Only one goaltender is allowed on the ice during game action at any one time. This goaltender may be removed and substituted by a skater. However, this replacement skater is not allowed to play under rules pertaining to a goaltender, notably in the matter of equipment, freezing the puck, and physical contact with opponents.

RULE 28 – CAPTAIN AND ALTERNATE CAPTAINS

i. Each team must appoint a captain and not more than two alternate captains from among the skaters listed on the game lineup. A team cannot forego the naming of a captain and instead designate three alternate captains for a game.
ii. A team cannot change its captain or alternate captains during a game. If a captain is ejected from a game or cannot play the entire game because of an injury, one of the alternate captains can assume his duties.
iii. The captain must wear the letter "C" and alternate captains must wear the letter "A" in a conspicuous position on the front of their sweater. The letter must be 8 cm (3 ⅛") high and in one contrasting colour to the sweater's primary colour.
iv. Only these designated skaters, if they are not penalized, are allowed to discuss with the referee any matter relating to the interpretation of rules during a game.
v. If both the captain and alternate captain are on the ice, only the captain is allowed to talk to the referee about a point of interpretation.
vi. If neither the captain nor an alternate captain is on the ice, he cannot come off the player's bench to discuss any situation with the referee unless requested to do so by an on-ice official. If he does come off the players' bench uninvited, he will be sent back by the referee, who

will then warn the head coach that a second violation will result in a misconduct penalty.

vii. A complaint concerning the merits of a penalty is not a matter relating to the interpretation of the rules and is not allowed. A player who argues a penalty call is subject to a misconduct penalty.

SECTION 4 – SKATERS' EQUIPMENT

OVERVIEW: Skaters' equipment consists of sticks, skates, protective equipment, and uniforms. All protective equipment, except gloves, helmets, and skates must be worn entirely underneath the uniform. Equipment must conform to safety standards and be used only to protect skaters, not to enhance or improve playing ability or to cause injury to an opponent. Full equipment, including helmets, must be worn properly during the pre-game warmup.

RULE 29 – DANGEROUS EQUIPMENT

i. Illegal equipment, equipment that does not conform to IIHF standards, and equipment deemed unacceptable for play are all classified as dangerous equipment and players utilizing such equipment are subject to penalties as outlined in Rule 128.

ii. A referee may request the measuring of any piece of equipment at any time. If he rules that it does not conform to IIHF standards in the rules set out below, it will be considered dangerous equipment and be confiscated.

iii. A player who uses dangerous equipment will be ruled off the ice and his team will be issued a warning by the referee.

iv. Dangerous equipment includes wearing a visor in a way that may cause injury to an opponent, wearing non-approved equipment, using dangerous or illegal skates or stick, failing to wear equipment under the uniform (excepting gloves, helmet, and goaltender's pads), and cutting the palm out of one or both gloves.

RULE 30 – ELBOW PADS

i. Elbow pads must have a soft protective outer covering of sponge rubber or similar material of at least 1.27 cm (½") thickness.

RULE 31 – FACIAL PROTECTION & MOUTH GUARD

i. There are two permissible types of protection which can be attached to the front of a skater's helmet: cage and visor.

ii. A visor is attached to the helmet and must extend down to cover the eyes and the lower edge of the nose in frontal and lateral projections.

iii. Member national associations participating in an IIHF championship event must ensure that their players are equipped with a helmet manufactured specifically for ice hockey and that, as applicable, a visor or cage is properly attached to it.

iv. Male players born after December 31, 1974, must wear, as a minimum, a visor.

v. All female players must wear a helmet with cage.
vi. All skaters in the age category Under-18 must wear a cage constructed in such a way that neither the puck nor a stick blade can penetrate it.
vii. Skaters are not allowed to wear a coloured or tinted visor.
viii. A skater whose visor or cage becomes cracked or broken is allowed to finish his shift, but upon leaving the ice he must repair or replace the damaged facial protection before being allowed back on the ice.
ix. All skaters in the age category Under-20 must wear a mouth guard.

RULE 32 – FLUORESCENT MATERIAL

i. No fluorescent material is allowed on any part of the equipment, clothing, or uniforms of anyone on ice.

RULE 33 – GLOVES

i. A skater's gloves must cover the hand and wrist areas and be of appropriate design.
ii. The backs of the gloves must be of a soft material and have no other material or objects other than padding sewn into them.

RULE 34 – HELMET

i. During the pre-game warmup and the game itself (regulation time, overtime, and penalty-shot shootout), skaters must wear a certified helmet manufactured specifically for ice hockey with chin strap properly fastened.
ii. If a skater fails to wear a helmet during the pre-game warmup in an IIHF competition, the standby referee will report the rules violation to the proper authorities. In national competitions, the procedure must follow the national association rules.
iii. Skaters must wear their helmet so that the lower edge of the brim is not more than one finger-width above the eyebrows. Additionally, there should be only enough room between the chin strap and the chin to insert one finger.
iv. Should the helmet of a skater come off during game action, he must go directly to the players' bench. He is not allowed to touch the puck or participate in game action, and he is not allowed to put it back on securely while on the ice even if he is not participating in game action.
v. A skater is not allowed to deliberately knock off the helmet of an opponent expressly to force him to the bench or to eliminate him from game action.
vi. Skaters' helmets cannot have any design or writing on them except to provide a number corresponding to their sweater number or for officially-licensed advertising.

vii. Skaters must wear their helmets while sitting on the players' bench or in the penalty box except when the helmet is being cleaned or repaired.

RULE 35 – NECK AND THROAT PROTECTOR/SKATER

i. All players who are 18 years and younger, regardless what event or tournament they are participating in, must wear a neck and throat protector.

RULE 36 – SHIN PADS

i. Skaters' shin pads must be of a size that allows them to fit inside standard skaters' socks. No protrusions from or additions to the manufactured shin pads are allowed.

RULE 37 – SKATES/SKATER

i. Skates must consist of only four parts: boot, blade, blade holder, and laces.
ii. The boot must conform to the foot of the skater and not be unduly wide or long or have any attachments to it.
iii. The blade must be smooth from front to back and secured in the blade holder at all times. It cannot have a pick in the manner of figure skates.
iv. The front and back of the blade must be properly covered by the blade holder such that no part of either end protrudes. The blade must not extend in front of the toe or behind the heel of the boot in the manner of speed skates.
v. No mechanical attachment or any other device which might help a skater's speed or ability to skate is allowed.
vi. Laces may be of any non-fluorescent colour and tied in any manner, but they must not be so long that they touch the ice.

RULE 38 – STICK/SKATER

i. Sticks must be made of wood or other material approved by the IIHF. They must not have any projections, and all edges must be bevelled.
ii. The curvature of a skaters' stick blade must not exceed 1.5 cm (5/8"). The curve is determined by making a perpendicular line measured from a straight line drawn from any point at the heel to the end of the blade.
iii. A stick may have only one curve and one blade. Any double curvature of the blade as measured by a curve gauge will render the stick illegal.
iv. The shaft of the stick, from the top down to the start of the blade, must be straight.

v. The butt end of the stick must be covered by a form of protection. If the cap at the top of a metal stick has been removed or falls off, the stick will be considered dangerous equipment.
vi. It is forbidden to insert any material into the hollow shaft of a stick to alter its weight, substance, or purpose.
vii. Adhesive, non-fluorescent tape of any colour may be wrapped around the stick at any place. Fluorescent-painted sticks are not allowed.
viii. It is illegal to play with a broken stick. If a skater's stick breaks during game action, he must drop it immediately.
ix. At no time is a skater allowed to use a goaltender's stick.
x. At no time is a skater allowed to use more than one stick at a time.
xi. It is forbidden for a skater to use an opponent's stick, whether by picking it up from the ice or by grabbing it from an opponent's grip.
xii. The maximum length of the shaft of a stick is 163 cm (64") from the top of the shaft to the heel; the maximum width is 3 cm (1 3/16"); the maximum thickness is 2.54 cm (1").
xiii. The maximum length of the blade of a stick is 32 cm (12 ½") along the bottom, from the heel to the toe of the blade, and it must be between 5–7.62 cm (2"–3") high.
xiv. Special exemptions on the length of a stick will be permitted if: (1) the player is at least 2.0 metres (6' 6 ¾") tall; (2) an application is made to the IIHF in writing a suitable time before the player wishes to use the stick; (3) the height of the shaft does not exceed 165.1 cm (65").

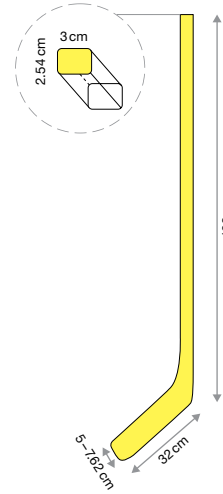

RULE 39 – TAPE

i. Only tape that is rolled onto a stick is allowed for covering the blade. Any adhesive, peel-and stick tape is illegal.

RULE 40 – UNIFORMS/SKATER

i. All players of a team must be dressed uniformly in matching sweaters, pants, socks, and helmet.
ii. All sweaters of a team must be of the same design, including logo on the front, numbers on the sleeves and back, and nameplate on the back.
iii. Players are not allowed to tamper with their uniforms in any manner, whether by cutting any part of it, writing on it, or marking it.
iv. If, in the opinion of the referee, the uniform colours of the competing teams are so similar that there is the possibility of misidentifying players, it is the responsibility of the home team to change its sweaters.

v. The dominant colour of the uniform must cover approximately 80% of the sweater and socks, excluding names and numbers.
vi. Sweaters must be worn entirely outside of the pants.
vii. Sweaters must follow the contours of the player's body and not be excessively baggy.
viii. Sweaters must not extend length-wise past the end of the pants, and the sleeves must not extend past the fingers of the glove.
ix. Each player must wear a number that is 25–30 cm (10"–12") high on the back of the sweater and 10 cm (4") high on both sleeves. Numbers are limited to whole numbers from 1 to 99 (no fractions or decimals).
x. No two players on a team may use the same number in the same game.
xi. Players are not allowed to change or exchange sweater numbers once the game has started. They must wear their number for the game's entirety and throughout the tournament or event.
xii. The only exception to Rule 40-xi is if a player's sweater becomes stained with blood or becomes badly torn during a game. At that point, he may be told by an on-ice official to leave the ice and change into a designated sweater with another number and no nameplate.
xiii. A player whose hair is long enough to obscure the nameplate or number on the back of the sweater must fashion it in a ponytail or tuck the hair under the helmet.
xiv. Graffiti-type designs, patterns, artwork, drawings, or slogans which are abusive or obscene and refer to culture, race, or religion are not allowed.
xv. In IIHF competitions, each player must wear his name on the upper portion of the back of his sweater, printed 10 cm (4") high, in block capital Roman letters of a font approved by the IIHF prior to the game or tournament.
xvi. All players on a team must wear the same uniforms and sweater numbers in the pre-game skate as they do during the game.
xvii. Players who do not comply with these provisions are not allowed to participate in the game.

RULE 41 – MEASUREMENT OF A PLAYER'S EQUIPMENT

i. A referee may request the measuring of any piece of equipment at any time. If he rules that it does not conform to IIHF standards in the rules set out here, it will be considered dangerous equipment and cannot be used during game action until it has been adjusted in accordance with these rules or with IIHF standards.
ii. No goal can be disallowed as a result of illegal equipment.
iii. The measuring of a skater's equipment is limited to sticks.
iv. The captain or alternate captain of a team is the only player who may make a formal complaint to the referee against the specific dimensions

of any opponent's equipment. He may do so at any stoppage of play or prior to the start of any period.

v. The referee will make the necessary measurement immediately. If the complaint is invalid, the requesting team will be assessed a bench-minor penalty. If the complaint is upheld, the offending player will be assessed a minor penalty and the illegal equipment will be returned to the player's bench by the referee.

vi. The request is limited to one measurement and one team at any stoppage of play, but a captain can make as many requests for measurement as he wants over the course of a game.

vii. If the captain of a team that is two men short in the last two minutes of the game or at any time in overtime requests an equipment measurement that is invalid, the referee will award a penalty shot against the requesting team. If the measurement is upheld, the offending player will be assessed a minor penalty.

viii. The player whose stick is to be measured must be holding the stick at the time the request is made. He may be on the bench or on the ice, but the referee must make visual confirmation that the stick in question belongs to the player.

ix. If a stick is deemed illegal, the offending skater must enter the penalty box immediately, and a teammate is allowed to bring him another stick. The referee will return the illegal stick to the team's players' bench, and if the team alters the stick to legal dimensions, it can be used again. As a result, it can also be measured again.

x. If the referee is unable to use the curve gauge for whatever reason to measure the curvature of a stick, the stick will be considered illegal and be removed from the game. However, no penalty will be assessed to either team.

xi. There can be a measurement of a player's or goaltender's stick anytime in overtime or the penalty-shot shootout or any time from the start of the game until its conclusion.

RULE 42 – MEASUREMENT OF A SKATER'S STICK/PENALTY-SHOT SHOOTOUT

i. A captain may request a stick measurement during a penalty-shot shootout.

ii. If the measurement is requested prior to a skater taking a shot and the stick is legal, the requesting team will incur a bench-minor penalty, and a skater from that team must go to the penalty box. He will be ineligible to participate in the penalty-shot shootout from that point forward. The skater whose stick was measured may then take his shot.

iii. If the measurement in Rule 42-ii shows the stick to be illegal, the skater who was about to take the shot must go to the penalty box and he will be ineligible to participate in the penalty-shot shootout from that point forward. Another skater will then be assigned to take the shot.

iv. Captains can request stick measurements between any and all shots of a penalty-shot shootout, but no more than one per “stoppage” (i.e., the time between shots) is permitted.

v. If the measurement occurs after a skater has taken his shot, the same outcomes from Rules 42-ii and 42-iii will be in effect. If the skater scores with what is ruled an invalid stick, the goal still counts.

SECTION 5 – PLAYING RULES/GENERAL

OVERVIEW – Rules form the very basis for playing a hockey game and must be respected and adhered to at all times. Although every effort has been made to outline all infractions on ice, on-ice officials have the right to assess penalties for other violations which they deem contrary to the spirit of fair play and the integrity of the sport in accordance with this rule book, but which are not set out in the rules below.

RULE 43 – HOW THE GAME IS PLAYED

i. A game consists of three periods of 20 minutes plus overtime and a penalty-shot shootout if required.
ii. Two teams compete to score the most goals in a game. The team that scores the superior number is declared the winner.
iii. To score a goal, a team must put the puck by legal means according to the rules into the goal net of its opponent (for exceptions see also Rules 179 and 180 re; Awarded Goals).
iv. Skaters control the puck on their stick and work their way down the ice by passing, shooting, and skating.
v. Bodychecking is an integral element of the game. It is the most common method of gaining control of the puck. For a bodycheck to be legal, it must meet a series of criteria specified by these rules.
vi. Players and team officials who violate the rules are punished by the on-ice officials or, in more serious cases, by the proper authorities.

RULE 44 – LENGTH OF PLAY

i. Regulation time consists of three periods of 20 minutes of game action, stop time.
ii. Periods are separated by a 15-minute intermission.
iii. Teams change ends to start each period.
iv. The ice must be resurfaced prior to the start of each period (excepting 5- and 10-minute overtime periods).
v. Overtime follows the third period when the score is tied after 60 minutes of regulation time and can consist of a 5-minute period, 10-minute period, or 20-minute period. In each case, these periods are played on a sudden-death basis (next goal wins). The penalty-shot shootout consists of three shots per team (if needed) followed by a sudden death, penalty-shot shootout if the score in the shootout is tied after three shots.

RULE 45 – SCORECLOCK

i. The scoreclock keeps time of the game and runs from the length of the period (20 minutes, 10 minutes, or 5 minutes) down to 0:00.

ii. The scoreclock is activated by the facing off of the puck by an on-ice official and is stopped by the whistle of an on-ice official.
iii. On-ice officials can consult with the video-goal judge in cases where additional time may have elapsed from the scoreclock – notably after a false faceoff or because of slow reaction by the timekeeper to a whistle – and make the necessary adjustments.

RULE 46 – WHISTLE

i. When an on-ice official blows his whistle to stop play, players must cease contact with their opponents and abandon the puck.
ii. If game action is in progress, play continues until an on-ice official blows his whistle to stop play.

RULE 47 – PUCK

i. The puck must be primarily black and be made of vulcanized rubber or other material approved by the IIHF.
ii. The puck must be 7.62 cm (3") in diameter and 2.54 cm (1") thick.
iii. The puck must weigh 156–170 grams (5.5–6.0 ounces).
iv. A printed logo, trademark, and advertising on the puck must not exceed 4.5 cm (1 ¾") in diameter of the area of each side of a puck or 35% of the area of each side of the puck. There may be printing on both sides of the puck.

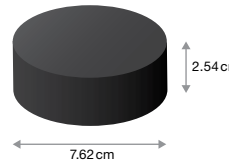

RULE 48 – WARMUP

i. Physical contact between players on opposing teams is not allowed during the warmup and players are not allowed to skate over the centre red line during this time. Violations of these rules will be handled by the standby referee who oversees the warmup.
ii. Any violations of game rules that occur during the warmup cannot be enforced by on-ice officials because they are not on the ice to witness the violations first-hand, but these may be reviewed after the game by the proper authorities.

RULE 49 – PUCK IN PLAY

i. Game action will be stopped immediately if the puck is less than whole (i.e., fragmented or broken in any way).

ii. If a puck other than the one legally in play appears on the ice during game action, game action will not be stopped until a change of possession occurs or if the illegal puck is erroneously played in place of the game puck.
iii. The puck must be in motion or be played at all times. If either or both teams refuse to play the puck, the on-ice officials will stop play, and the ensuing faceoff will take place at the nearest faceoff spot to where the puck was situated when play was stopped.

RULE 50 – CHANGE OF ENDS

i. Teams must start a game defending the goal net nearest their players' bench.
ii. Teams must change ends for each succeeding regulation or 20-minute overtime period. Teams will also change ends when there is no resurfacing of the ice (i.e. when an overtime period is limited to 5 or 10 minutes), but teams will not change ends prior to the start of a penalty-shot shootout.
iii. For outdoor games, play will be stopped at the 10:00 mark of the third period so teams can change ends. In overtime periods, however, teams will not change ends.

RULE 51 – STARTING GAME ACTION

i. Game action must always begin with a faceoff conducted by an on-ice official.
ii. Every period starts with a faceoff at centre ice. Every other instance of starting play will begin with a faceoff only at one of the nine designated faceoff spots marked on the ice.

RULE 52 – DETERMINING FACEOFF LOCATION/GENERAL

i. When game action is stopped for any reason not specifically outlined below, the ensuing faceoff will take place at a faceoff spot in the zone nearest to where the puck was last played.
ii. If two rule violations by one team are the reason for a stoppage of play (i.e., high-sticking the puck and intentional offside), the ensuing faceoff will take place at a faceoff spot which provides the offending team no territorial advantage.
iii. If rule violations are committed by both teams, resulting in a stoppage of play (i.e., high-sticking the puck and intentional offside), the ensuing faceoff will take place at the nearest faceoff spot to where the puck was situated when play was stopped.
iv. When a stoppage of play is caused by an attacking skater in the attacking zone, the ensuing faceoff will take place in the neutral zone at the nearest faceoff spot unless the defending team incurred a penalty at the same time.

v. If a player lifts the puck high enough to hit the scoreclock or any obstacle above centre ice, game action will be stopped and the ensuing faceoff will take place at the nearest faceoff spot to where the puck was lifted.

RULE 53 – DETERMINING FACEOFF LOCATION/PENALTIES ASSESSED

i. When players are penalized resulting in penalties to one team being placed on the scoreclock, the ensuing faceoff will take place at one of the two end zone faceoff spots in the end of the team that will play short-handed except:
   1. When a penalty is assessed after the scoring of a goal, the ensuing faceoff will take place at centre ice;
   2. When a penalty is assessed before the start or at end of a period, the ensuing faceoff will take place at centre ice;
   3. When the defending team is about to be penalized and an attacking skater enters the attacking zone beyond the outer edge of the end zone faceoff circles during a player confrontation, the ensuing faceoff will take place at one of the two faceoff spots outside the attacking zone.

ii. If a skater of the attacking team is assessed a penalty during a faceoff in the attacking zone, the faceoff will be moved to the defending zone of the team being penalized.

iii. If penalties are assessed to both teams during the same stoppage of play but at different instances and for different reasons, the faceoff will be in the defending zone of the team that committed the last of the fouls.

iv. When both teams incur penalties which are displayed on the scoreclock, the ensuing faceoff will take place at the nearest faceoff spot in the zone where game action was stopped.

v. If an attacking player incurs a misconduct or game-misconduct penalty in his attacking zone, the ensuing faceoff will take place at the nearest faceoff spot to where game action was stopped.

RULE 54 – DETERMINING FACEOFF LOCATION/INJURY

i. When game action is stopped for an injured player, the ensuing faceoff will take place at a faceoff spot determined by the location of the puck and by which team is in possession of the puck at the time of the whistle.

ii. If the injured player's team has possession of the puck in the attacking zone, regardless of where the injured player is situated, the ensuing faceoff will take place at one of the faceoff spots outside the attacking zone blue line.

iii. If the injured player's team has possession of the puck in the neutral zone, regardless of where the injured player is situated, the ensuing

faceoff will take place at the faceoff spot between the blue lines nearest to where the puck was being played at the time of the whistle.

iv. If the injured player's team has possession of the puck in the defending zone, regardless of where the injured player is situated, the ensuing faceoff will take place at one of the faceoff spots in the defending zone.

v. If an on-ice official is injured, game action will be stopped immediately, unless there is a scoring opportunity, and the ensuing faceoff will take place at the nearest faceoff spot to where the puck was being played at the time of the whistle.

RULE 55 – DETERMINING FACEOFF LOCATION/DEFENDING ZONE

i. When a player on the defending team freezes the puck along the boards in his defending zone, the ensuing faceoff will take place at the end faceoff spot on the side where the stoppage occurred.

ii. If an attacking skater shoots or passes the puck up ice and a defending skater deflects the puck in any way out of play in the neutral zone, the ensuing faceoff will take place in the neutral zone nearest to where the puck was deflected.

iii. If an attacking skater shoots or passes the puck up ice and a defending skater deflects the puck in any way out of play in his defending zone, the ensuing faceoff will take place at the end faceoff spot nearest to where the puck was deflected.

iv. If the attacking team commits an intentional offside, the ensuing faceoff will take place in its defending zone on the side where the offside occurred.

RULE 56 – DETERMINING FACEOFF LOCATION/CENTRE-ICE SPOT

i. Faceoffs will take place at the centre-ice faceoff spot under the following circumstances:
   1. At the start of a period;
   2. After a goal has been scored;
   3. After an error by the on-ice officials on an icing call;
   4. If skaters from both teams freeze the puck along the boards near the centre red line;
   5. For premature substitution of a goaltender after the offending team gains possession of the puck when game action is stopped in the attacking half of the ice, but only if play is beyond the centre red line. If play is stopped prior to the puck reaching the centre red line, the ensuing faceoff will take place at the nearest faceoff spot in the zone where play was stopped.

ii. When game action is stopped in the neutral zone for any reason not specifically attributable to either team, the ensuing faceoff will take place at the nearest faceoff spot between the blue lines. When it is unclear as to which of the five faceoff spots in the neutral zone is the

nearest, the spot that gives the home team the greatest territorial advantage in the neutral zone will be selected for the ensuing faceoff.

RULE 57 – DETERMINING FACEOFF LOCATION/ATTACKING ZONE

i. If a skater on the attacking team freezes the puck along the boards in the attacking zone in what the referee deems to be a clear attempt to stop play, the ensuing faceoff will take place outside the attacking blue line on the side where the stoppage occurred.

ii. If a skater on the attacking team shoots the puck over the protective glass inside the attacking blue line without the puck touching an opponent's body or stick, the ensuing faceoff will take place outside the blue line at the faceoff spot nearest to where the puck was shot.

iii. If a skater on the attacking team shoots the puck over the protective glass inside the attacking blue line, but the puck touches an opponent's body or stick, the ensuing faceoff will take place at the faceoff spot inside the blue line on the side where the puck was last touched.

iv. If a player takes a shot on goal from anywhere on the ice and the puck, without deflection, hits any part of the goal frame and goes out of play, the ensuing faceoff will take place in the attacking zone at the faceoff spot nearest to where the puck was shot.

v. When a skater of the attacking team scores a goal by a high stick, kicking motion, or any other method that is deemed illegal by the on-ice official or video-goal judge, the ensuing faceoff will take place outside the attacking blue line.

vi. When the puck enters the goal net as a result of a puck being deflected directly off an on-ice official, the ensuing faceoff will take place at the faceoff spot nearest to where the puck deflected off him.

vii. If an attacking skater knocks the goal net off its moorings in the attacking zone and makes no attempt to avoid doing so, the ensuing faceoff will take place at the faceoff spot in the neutral zone nearest to the attacking zone. However, if an attacking player is pushed into the goal frame by a defending player, the ensuing faceoff will take place at an end zone faceoff spot in the attacking zone.

viii. There are four instances when a whistle is blown inside the attacking blue line but the ensuing faceoff takes place outside the blue line:

1. If one or both defencemen on ice or a player coming from the bench of the attacking team enters into the attacking zone beyond the outer edge of the end zone faceoff circle during a player confrontation;
2. If a skater on the attacking team shoots or deflects the puck out of play without the puck touching the goal net or a player on the defending team in any way;
3. If the attacking team high sticks the puck inside the attacking zone;
4. If an attacking skater establishes position in the goal crease.

RULE 58 – PROCEDURE FOR CONDUCTING FACEOFFS

i. The on-ice official must drop the puck on one of the nine designated faceoff spots.
ii. Only one skater from each team is allowed to participate in a faceoff.
iii. The two skaters participating in the faceoff must be positioned squarely facing their opponent's goal, approximately one stick length apart, with the tip of the stick blade stationary on the white part of the faceoff spot.
iv. The on-ice official may drop the puck if only one player is ready for the faceoff provided all other skaters not involved in the faceoff are onside and in ready position.
v. When the faceoff is in the defending half of the ice, the skater of the defending team must place his stick on the ice first followed immediately by the skater of the attacking team.
vi. When the faceoff is at the centre-ice faceoff spot, the skater of the visiting team must place his stick on the ice first.
vii. All skaters not taking the faceoff must keep their skates outside the circle (contact with the line is permitted). A skater's stick may be inside the circle provided there is no contact with either an opponent or an opponent's stick.
viii. A skater must also keep his skates on his side of the hash marks (contact with the line is permitted). A skater's stick may be inside the area between the two hash marks provided there is no contact with either an opponent or an opponent's stick.
ix. All skaters must be on their side of the ice at a suitable distance removed from the skaters taking a faceoff between the blue lines. They must remain stationary and cannot skate freely during the faceoff procedure or influence or interfere with the faceoff procedure.
x. Once the skaters are in the set position for a faceoff, they cannot change positions.

RULE 59 – FALSE FACEOFFS

i. If one or both of the skaters taking the faceoff fail to take their proper position immediately when directed to do so, the on-ice official may order him or them replaced for the faceoff by a teammate on the ice.
ii. If one of the other skaters not taking the faceoff enters the faceoff circle prematurely, the on-ice official will stop the faceoff. The skater of the offending team taking the faceoff must be replaced.
iii. If one of the other skaters not taking the faceoff enters the faceoff circle prematurely, and the puck has already been dropped, game action will be stopped and the faceoff will be re-taken, unless the opposing team gains possession of the puck. If play is stopped, the skater of the offending team taking the faceoff must be replaced.
iv. No substitution of players is allowed after a false faceoff until the faceoff has been properly executed and game action begun, except when a penalty is assessed that affects the on-ice strength of either team.

v. If a skater wins a faceoff by kicking the puck to a teammate, game action will be stopped and the faceoff re-taken. The skater of the offending team taking the faceoff must be replaced.
vi. If a faceoff is won by a hand pass, play will be stopped and the faceoff re-taken, and the skater of the team which committed the hand pass must be replaced. If a skater gloves the puck on a faceoff and the opposing team gains possession, play will continue. Any on-ice official may make this call.
vii. Any team that incurs a second violation of faceoff procedures at the same faceoff will be assessed a bench-minor penalty.
viii. No faceoff may be won by virtue of a player knocking or batting the puck with his hand in the air immediately after it has been dropped by an on-ice official.
ix. If a skater's skate crosses the hash mark prior to the drop of the puck at a faceoff, it will be considered a faceoff violation.
x. Any contact with an opponent or his stick prior to the drop of the puck at a faceoff will be considered a faceoff violation.

RULE 60 – TELEVISION TIMEOUTS

i. An IIHF game that is televised is subject to two commercial timeouts per period.
ii. These timeouts occur after the whistle following the 14:00 mark and the 8:00 mark.
iii. Television timeouts cannot take place:
    1. After an icing call;
    2. During a power play;
    3. After a goal;
    4. If a penalty shot call has forced the stoppage.
iv. In the event that a commercial timeout is not taken during the prescribed time slot, it will be made up for at the first whistle in the next commercial break time slot. The second commercial will then be taken two whistles after the first commercial break is taken in this time slot. If there is another incident where the second commercial is missed, this procedure will continue to repeat itself until all breaks are taken. The only exception occurs when a five-minute (non-coincident) major penalty is called on a player. In this situation, the commercial break will occur at the prescribed time.
v. Television timeouts are not allowed during the overtime period.

RULE 61 – TEAM TIMEOUT

i. Each team is allowed one, 30-second timeout during a game (60 minutes of regulation time plus overtime).
ii. A skater designated by the coach or the coach himself may ask the referee for the team timeout during a stoppage in play.

iii. All players on ice are allowed to go to their respective benches during a team timeout.
iv. Both teams can take their timeout at the same stoppage of play, but the team taking the second timeout must notify the referee of its intentions before the end of the first timeout.
v. A team cannot call a timeout during the penalty-shot shootout, before a period has started, or after a period has ended.
vi. A team timeout cannot be called after player changes have been complete.
vii. A team timeout cannot be called after a false faceoff.
viii. A team timeout cannot be called during game action.

RULE 62 – OVERTIME PERIOD

i. A game which must have a winner (i.e., in which a tie score is not allowed) and which is tied after regulation time must be extended by one, sudden-death overtime period of 5, 10, or 20 minutes.
ii. For a 5- or 10-minute overtime period, there will be a three-minute pause after regulation time. There will be no resurfacing of the ice and teams will change ends for the overtime period.
iii. In the case of a 20-minute overtime period, teams will go to their dressing rooms for a standard intermission while the ice is resurfaced, and teams will change ends from the third period.
iv. For rules pertaining to penalties in overtime and manpower adjustments, see Rule 115.

RULE 63 – PENALTY-SHOT SHOOTOUT

See also Rules 176–178 for Penalty-Shot Procedure.

i. If no goal is scored in the sudden-death overtime period, a penalty-shot shootout will be used to determine a winner.
ii. Prior to the start of the penalty-shot shootout, the entire centre section of the rink between end-zone faceoff spots will be dry-scraped by the ice-resurfacing machine.
iii. The referee will call the two captains to the on-ice officials' crease to call a coin toss. The winner has the choice to have his team shoot first or second.
iv. Goaltenders will defend the same goal net as in the overtime period.
v. Goaltenders from each team may be changed after each shot, but if a shot must be re-taken for any reason, the skater and goaltender must remain the same except in case of injury.
vi. Three different skaters from each team will take shots alternately (A,B,A,B,A,B). The skaters do not need to be named beforehand and can be changed any time up to the point when the referee blows his whistle to signal the start of a shot.
vii. Eligible to participate in the penalty-shot shootout are all players from both teams listed on the official game sheet except those serving

penalties which had not expired prior to the completion of the overtime period as well as players who had been assessed game-misconduct or match penalties. These players must remain in the penalty box or in the dressing room during the penalty-shot shootout.

viii. The team with the most goals after the first six shots is declared the winner of the game. If the game's outcome is known before all six shots have been taken, the remaining shots will be abandoned.

ix. If the score of the penalty-shot shootout is still tied after six shots, it will continue under a sudden-death format.

x. The sudden-death penalty-shot shootout will allow one skater from each team to take a shot until a winner is determined. Any skater, including those who participated in the first stage of the penalty-shot shootout, is eligible to shoot in as many rounds of the sudden-death format as may occur.

xi. The team that took the first shot during the penalty-shot shootout for the first three rounds will shoot second for the fourth and subsequent shots of the sudden-death format until a winner is determined.

xii. If, at the referee's urging, a coach does not send a skater out to take a shot, or if a skater declines to take a shot, the shot will be declared "no goal" and the opposing team will take its next shot.

xiii. If a team declines to participate in the penalty-shot shootout, its opponent will be awarded the win.

xiv. The referee is allowed to consult with the video-goal judge only if there is doubt as to whether the puck crossed the plane of the goal line on a shot. All other uses for video-goal judge are not applicable during the penalty-shot shootout.

SECTION 6 – PLAYING RULES/STOPPAGES OF PLAY

OVERVIEW – Game action begins once the puck is faced off by an on-ice official. It is stopped by a whistle from an on-ice official because of a violation of one of the rules set out below or by an event which prevents play from continuing (puck out of play, puck frozen, etc.)

RULE 64 – INTERFERENCE BY SPECTATORS

i. Any occurrence of spectator interference must be reported by the on-ice officials to the proper authorities.

ii. In the event that objects are thrown onto the ice by spectators and game action is compromised, play will be stopped and the ensuing faceoff will take place at the nearest faceoff spot to where play was stopped.

iii. In the event of a skater being held or interfered with by a spectator, play will be stopped.

iv. If the team of the skater interfered with is in possession of the puck, game action will continue until a change of possession occurs.

RULE 65 – ICING THE PUCK/HYBRID ICING

i. Should a player of a team equal or superior in numerical strength propel the puck in any manner (stick, glove, skate, body) from his own half of the ice to beyond the icing line of the opposing team – including off the boards or the protective glass – without the puck being touched by any player from either team in the offensive half of the ice before the puck crosses the icing line, an icing will be in effect.

ii. There are two decisions a linesman must make under hybrid icing rules. First, he must determine that the shot from a player's own side of centre ice will cross the icing line in the attacking zone. Second, he must determine whether a defending skater or attacking skater would be first to touch the puck.

iii. This second decision must be made no later than the instant the first of the players reaches the end zone faceoff spots, although the decision can be made earlier. The skates of the skaters are the determining factor.

iv. Should the puck be shot or propelled in such a way that it travels around the boards and slides back towards centre ice, the linesman will determine which player would be first to touch the puck. In this instance, the determining factor is not the end zone faceoff spots but the puck itself.

v. If there is no "race" for the puck, icing will be not called until a defending player crosses his defending blue line and the puck crosses the icing line.

vi. If the race for the puck is too close to determine which player from which team would touch the puck first, icing will be called.
vii. During an icing situation where play has been stopped, there must be strict enforcement of rules regarding avoidable contact.
viii. During an icing situation where the icing has been cancelled because an attacking player has gained positional advantage, players must compete within the rules pertaining to physical contact.

RULE 66 – ICING THE PUCK/GAME SPECIFICS

See also Rule 205 – Icing and the Goaltender

i. For the purposes of icing, the entire centre red line is part of the offensive half of the ice. Once a skater has "gained the line," he may shoot the puck the rest of the way down the ice without incurring an icing charge.
ii. To "gain the line," a player must make contact with the centre red line with the puck on his stick (not skate).
iii. Only a team that is playing short-handed (i.e., has fewer skaters on ice than its opponent) is allowed to shoot the puck from its own side of centre ice to beyond its opponent's icing line without incurring an icing call.
iv. Whether a team is short-handed or not is decided by the number of skaters on ice at the time the puck leaves the player's stick. If the penalty-box attendant has opened the door at the expiration of a penalty, but the player has not physically stepped onto the ice, he will be considered on the ice as far as interpretation of icing is concerned.
v. A team is not considered short-handed if the number of players on ice is fewer than allowed but that number is not the result of penalties.
vi. If the puck hits an on-ice official on its way down the ice, the icing will still be in effect. If, by virtue of hitting an on-ice official, the puck slows down and does not cross the icing line, the icing will be nullified.
vii. After an icing call, the ensuing faceoff will take place at the end zone faceoff spot of the offending team nearest to where the player shooting or directing the puck last touched it.
viii. If the on-ice officials have erred in calling an icing, the ensuing faceoff will take place at the centre-ice faceoff spot.
ix. If any of the following situations occur, icing will not be called:
    1. If the puck is iced directly by a skater participating in a faceoff;
    2. If any opposing skater is able to play the puck before it crosses the icing line (including skaters who slow down to ensure the puck crosses the icing line or who pretend to skate fast but don't make a genuine effort to get to the puck before it crosses the icing line);
    3. If a player making a line change ignores the puck to go to the bench instead of playing the puck, whether to avoid a penalty for too many men or any other reason;

4. If the puck touches any part of an opponent's body or equipment any time from when it is shot to when it crosses the icing line;
5. If a goaltender leaves his goal crease during an icing play or is outside his goal crease and moves in the direction of the puck;
6. If the puck hits the goal frame and crosses the icing line.

RULE 67 – PUCK OUT OF PLAY

i. When the puck is shot or deflected outside the playing area (including into the players' bench) or strikes any obstacles other than the boards or protective glass above the ice surface, game action will be stopped and the ensuing faceoff will take place at the nearest faceoff spot to where the puck was shot or deflected, unless otherwise set out in these rules.

ii. When game action is stopped because a player's shot or pass hits a teammate on the players' bench who is leaning over the boards or whose body is over the ice surface, or the puck enters his team's players' bench through an open door, the ensuing faceoff will take place at the nearest faceoff spot in the zone from where the puck was shot which gives the offending team no territorial advantage.

iii. When game action is stopped because a player's shot or pass hits an opponent on the players' bench who is leaning over the boards or whose body is over the ice surface, or the puck enters the opponent's players' bench through an open door, the ensuing faceoff will take place in the neutral zone nearest to the opponent's players' bench which gives the offending team no territorial advantage.

iv. If the puck goes out of play directly from a faceoff, the faceoff will be conducted again from the same spot and no penalty will be assessed to any skater for delay of game.

v. The protective glass at either end of the players' benches connects to a stanchion which connects to a curved turnbuckle (protective glass inside the players' bench area). If the puck hits the stanchion, it is still in play, but if it hits the turnbuckle it is considered out of play.

vi. If the puck hits the netting behind either goal, it is considered out of play and normal rules for faceoffs apply so long as the whistle has stopped play (see also Rule 70-ix for exception).

RULE 68 – PUCK ON DASHER

i. If the puck comes to rest along the dasher anywhere inside the rink during game action, it will be considered in play and players can gain possession of it by any usual and allowable means.

RULE 69 – PUCK ON GOAL NET (BASE AND TOP)

i. When the puck lands on the outside of the goal net (at either the base along the back of the goal net or on the top) for longer than the flow

of the game permits, or if it is frozen against the goal net, the referee will stop play.

ii. If the stoppage is caused by a defending player, the ensuing faceoff will take place at the nearest end zone faceoff spot.

iii. If the stoppage is caused by an attacking skater, the ensuing faceoff will take place at the nearest faceoff spot outside the blue line.

iv. A player who, during the course of continuous action, is able to knock the puck off the goal net, at either the base along the back of the goal net or at the top, game action will continue.

v. If in the act of batting the puck off the top of the goal net the player makes contact between stick and puck, the usual rules for high-sticking the puck will apply.

RULE 70 – PUCK OFF END NETTING

i. If the puck is shot from inside the attacking zone and hits the end netting directly from the shot, the ensuing faceoff will take place outside the attacking zone blue line.

ii. If the puck is shot from inside the attacking zone and hits the end netting as a result of a deflection by the defending team, the ensuing faceoff will take place at the nearest faceoff spot in the attacking zone to where the shot was taken.

iii. If the puck is shot from outside the attacking zone and hits the end netting directly by the shot, the ensuing faceoff will take place at the nearest faceoff spot to where the shot was taken which provides the offending team no territorial advantage.

iv. If the shot in Rule 70-iii is made in the neutral zone, the ensuing faceoff will take place at the nearest faceoff spot to where the shot was taken which provides the offending team no territorial advantage.

v. If the shot in Rule 70-iii is made in the defending zone, the ensuing faceoff will take place at the nearest faceoff spot in the defending zone.

vi. If the puck is shot from outside the attacking zone and hits the end netting as a result of a deflection by the defending team, the ensuing faceoff will take place at the nearest faceoff spot to where the deflection was made which provides the offending team no territorial advantage.

vii. If in Rule 70-vi the puck is deflected in the defending zone, the ensuing faceoff will be in the defending zone.

viii. If in Rule 70-vi the puck is deflected in the neutral zone, the ensuing faceoff will take place in the neutral zone nearest to the deflection which provides the offending team no territorial advantage.

ix. If the puck hits the end netting but there is no whistle, game action will continue as if it had hit the protective glass.

RULE 71 – PUCK OUT OF SIGHT

i. As soon as the referee loses sight of the puck he will blow his whistle to stop play. The ensuing faceoff will take place at the nearest faceoff

spot to where play was stopped, unless otherwise provided for in these rules.

RULE 72 – PUCK OFF THE GOAL NET

i. If a puck is shot by an attacking skater and hits any part of the goal frame or goal net and goes out of play directly, without touching an opponent in any way, the ensuing faceoff will take place in the attacking zone. If the puck is deflected before or after hitting the goal frame or goal net by a player of the defending team, the ensuing faceoff will take place at the end faceoff spot nearest to where the shot was taken.

RULE 73 – PUCK STRIKING AN ON-ICE OFFICIAL

i. Game action will not be stopped because the puck touches an on-ice official during the regular course of play except when:
   1. The puck enters the goal net as a result of that contact;
   2. The puck goes out of play as a result of that contact;
   3. An on-ice official is injured.

ii. If the attacking team scores a goal because the puck deflects or bounces directly off an on-ice official, the goal will not be allowed and the ensuing faceoff will take place at the nearest faceoff spot to where the puck made contact with the on-ice official.

iii. If the puck hits an on-ice official and is subsequently put into the goal net in any legal manner, the goal will be allowed.

iv. If the puck leaves the playing area after hitting an on-ice official in the neutral zone, the ensuing faceoff will take place at the faceoff spot in the neutral zone nearest to where the puck made contact with the on-ice official.

v. If the puck leaves the playing area after hitting an on-ice official in either end zone, the ensuing faceoff will take place at the faceoff spot in the end zone nearest to where the puck made contact with the on-ice official.

RULE 74 – HAND PASS

i. A skater is not allowed to catch the puck in his palm and skate with it, either to avoid a check or to maintain possession of the puck.

ii. When a hand-pass violation occurs, game action will be stopped and the ensuing faceoff will take place at the nearest faceoff spot to where the infraction occurred or where the teammate gained possession of the puck, whichever provides the offending team with less territorial advantage.

iii. A hand pass is allowed in the defending zone provided that both the skater receiving the pass and the puck are still inside that defending zone.

iv. If a skater in his defending zone deliberately directs the puck with a glove or arm to a teammate or has allowed his team to gain an advantage in any zone other than the defending zone, game action will be stopped and the ensuing faceoff will take place in the defending zone at the nearest faceoff spot to where the hand pass originated.
v. A skater in the neutral zone is not allowed to make a hand pass to a teammate in their defending zone. In this instance, the referee will stop play and the ensuing faceoff will take place at the nearest faceoff spot in the defending zone.
vi. If the puck enters the goal net as a result of either being gloved by an attacking skater or being deflected into the goal net by any player in any manner after the initial contact with the glove, the goal will not be allowed and the ensuing faceoff will take place outside the blue line at the faceoff spot closest to where the hand pass was initiated by the offending team and which provides no territorial advantage to that team.
vii. If a defending player bats or gloves the puck into his own goal, the goal will be allowed.

RULE 75 – HIGH STICKING THE PUCK/GAME ACTION

i. If a player touches the puck with his stick above the height above his shoulder, and either he or a teammate is the next player to come into possession and control of the puck, or the puck is batted out of play, game action will be stopped.
ii. If this infraction occurs in the attacking zone, and the teammate subsequently comes into possession and control of the puck in the attacking zone, the ensuing faceoff will take place outside the blue line on the side nearest to where the teammate gained control.
iii. If this infraction occurs in the attacking zone, and the teammate subsequently gains control of the puck in either the neutral zone or defending zone, the ensuing faceoff will take place at a faceoff spot closest to where the puck was controlled that provides less territorial advantage to the offending team.
iv. If this infraction occurs in the neutral zone, the ensuing faceoff will take place in the defending zone on the side nearest to where the teammate subsequently came into possession and control of the puck.
v. If this infraction occurs in the defending zone, the ensuing faceoff will take place in the defending end on the side nearest to where the teammate subsequently came into possession and control of the puck.
vi. High sticking the puck during game action is determined by the player's shoulder (whereas the allowable height for deflecting a puck into the goal net is the crossbar).
vii. If a player touches the puck in any manner with his stick above the height of his shoulder, and an opponent is the next player to play the puck, game action will continue.
viii. If a player hits the puck with a high stick and knocks the puck into his own goal, the goal will be credited to the opposition.

ix. The ‘lacrosse-like’ manoeuvre whereby a skater cradles the puck on the blade of his stick is permitted provided he does not raise his stick (and, by extension, the puck) above the height of his shoulder at any time during the motion. If the puck and stick are above the height of the shoulder at any time during the manoeuvre, game action will be stopped.

x. If a player on the team in possession of the puck makes contact with the puck with a high stick during a delayed-penalty situation against the opposing team, the ensuing faceoff will take place at one of the two end zone faceoff spots of the team being penalized.

RULE 76 – HIGH STICKING THE PUCK INTO THE GOAL NET

See also Rule 97-ii

i. No goal will be allowed if an attacking skater directs, deflects, or bats the puck into the goal net in any way with his stick above the height of the crossbar, even if the puck subsequently deflects off any player, the goaltender, or an on-ice official, or bounces off the ice and in.

ii. The determining factor is where the puck makes contact with the stick in relation to the crossbar. If that part of the stick making contact with the puck is at or below the crossbar, the goal will be allowed.

RULE 77 – PROTECTIVE GLASS/DAMAGED

i. If any section or part of the protective glass is damaged during the course of game action, play will be stopped immediately and will not resume until it has been repaired.

RULE 78 – OFFSIDE

i. The only offside line is the attacking blue line. Skaters of the attacking team cannot cross this line before the puck without incurring an offside.

ii. The entire width of the blue line is considered part of the zone the puck is in.

iii. If the puck is outside the attacking blue line, it is not considered inside the attacking zone until it is completely over the blue line.

iv. If the puck is in the attacking zone, it is not considered outside the blue line until it is completely over the blue line.

v. If a skater on the attacking team is inside the attacking zone and the puck is in the neutral zone, the puck is not considered in the attacking zone until it is completely over the blue line.

vi. Offside is determined by the position of the skates of the attacking team at the attacking blue line in relation to the puck. An attacking skater is offside when both skates are completely over the blue line in the attacking zone before the puck is completely over the blue line.

This includes the three-dimensional position of the puck. If the puck is in the air directly above the plane of the blue line before any attacking skater, the play is onside.

vii. Skaters' skates are interpreted only in two dimensions. Any skate that is in the air is considered not on any side of the blue line until it touches the ice.

viii. To be onside, a skater may have one skate inside the blue line as long as one is on or outside the blue line touching the ice.

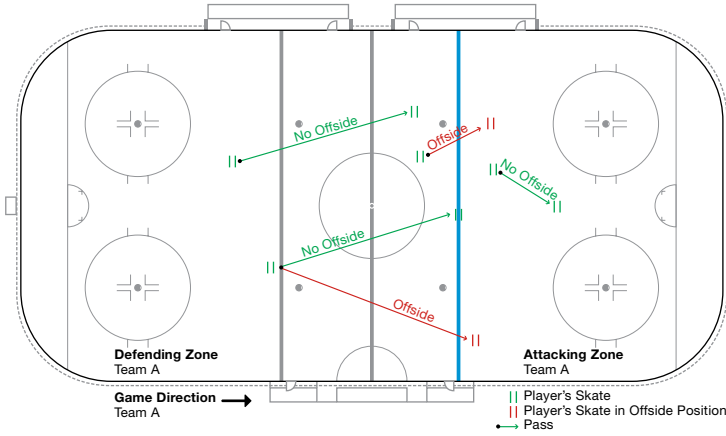

RULE 79 – OFFSIDE SITUATIONS

i. If an attacking skater shoots or passes the puck which hits a teammate who preceded the puck into the attacking zone, game action will be stopped and an offside called. The ensuing faceoff will take place at the nearest faceoff spot to where the pass or shot originated which provides the offending team less territorial advantage.

ii. If an attacking skater shoots the puck from outside the attacking zone, and it goes out of play in the attacking zone while a teammate preceded the puck into that zone, game action will be stopped and an offside called. The ensuing faceoff will take place at the nearest faceoff spot to where the pass or shot originated which provides the offending team less territorial advantage.

iii. If a player from the defending team is in his defending zone and clears the zone with a shot or pass which hits an on-ice official outside the blue line and bounces back inside while a skater from the attacking team is still inside the blue line, the play will be considered a delayed offside.

iv. If a skater makes a pass from outside his defending zone to a teammate with both skates inside the attacking zone, the play will be called as offside and the ensuing faceoff will take place in the neutral zone at the nearest faceoff spot to where the pass was made which provides the offending team less territorial advantage.

v. If a player makes a pass from inside his defending zone to a teammate already inside the attacking zone, the play will be called as offside and the ensuing faceoff will take place in the defending zone at the nearest faceoff spot to where the pass was made.

vi. If an attacking skater is inside the attacking zone but he stickhandles or controls the puck outside that zone or zig-zags back and forth over that attacking zone blue line, the play is considered offside, and the ensuing faceoff will take place in the neutral zone at the nearest faceoff spot to where the puck was situated at the time of the whistle.

RULE 80 – FACEOFFS AFTER OFFSIDE

i. If an offside occurs, game action will be stopped and a faceoff will take place as follows:
   1. At the nearest neutral zone faceoff spot, if the puck was carried over the blue line by an attacking skater while a teammate was inside the blue line in advance of the puck;
   2. At the centre ice faceoff spot if the pass or shot originated between centre red line and the attacking blue line;
   3. At a neutral zone faceoff spot nearest the defending zone if the pass or shot originated between the defending blue line and the centre red line;
   4. At an end faceoff spot in the defending zone of the offending team if a skater intentionally caused an offside;
   5. At an end zone faceoff spot in the defending zone of the offending team if the puck was passed or shot by an attacking skater from his defending zone;
   6. At the faceoff spot nearest to where the puck was shot if the shot or pass that created a delayed offside goes directly out of play;
   7. At a faceoff spot in the defending zone if the defending team is about to incur a penalty on a delayed offside play;

RULE 81 – ONSIDE

i. If the puck carrier maintains control of the puck while his skates cross the blue line ahead of the puck, he is considered onside provided that he first had control of the puck with both skates in the neutral zone and that he kept the puck on his stick until the puck fully crossed the blue line.

ii. If a skater receives a pass and his stick and one skate are over the blue line but one skate is the neutral zone touching the ice, the play is onside.

iii. If a skater from the defending team who is in the neutral zone or attacking zone moves the puck back inside his defending zone (by stickhandling, passing, or kicking the puck) while skaters from the attacking team are in that zone, the play is onside.

RULE 82 – DELAYED OFFSIDE

i. If an attacking skater precedes the puck into the attacking zone but does not touch the puck, the on-ice official will raise his arm to signal a delayed offside. Game action will continue if the defending team gains possession of the puck and the attacking skater makes no effort to gain possession of the puck or force the defending puck carrier further back in his end and instead leaves the attacking zone such that at least one skate makes contact with the blue line.

ii. The attacking zone must be completely clear of attacking skaters or the defending team must have moved the puck outside its blue line before the linesman can cancel the offside. At that point, the attacking team is free to try to gain possession of the puck or re-enter the attacking zone.

iii. If a delayed offside results in a stoppage of play, the ensuing faceoff will take place outside the blue line of the defending team at the nearest faceoff spot to where the puck was situated at the time of the whistle.

iv. If, during a delayed offside, the defending team makes no effort to move the puck out of its end and the attacking team makes no attempt to clear the zone, game action will be stopped and an offside will be called. The ensuing faceoff will take place outside the blue line of the defending team at the nearest faceoff spot to where the puck was situated at the time of the whistle.

v. If, during a delayed offside, the defending team puts the puck into its own goal net, the goal will be allowed.

vi. During a delayed offside, the defending team is allowed to take the puck behind its own goal net in the process of clearing the zone as long as there is no attempt to delay the game.

vii. If the puck is shot into the attacking zone resulting in a delayed offside, but, as a result of this shot, the puck enters the defending team's net (either directly or off the goaltender, a defending player, or an official or after bouncing off the protective glass or the boards), the goal will not be allowed because the shot was offside. The fact that the attacking team may have cleared the zone prior to the puck entering the goal net is immaterial.

viii. If, during a delayed offside, a player from the defending team shoots the puck directly out of play, rules pertaining to delay of game will be applied and the appropriate penalty assessed.

ix. If the situation in Rule 82-viii occurs but the puck deflects off the glass or a teammate, but does not cross the blue line, no penalty will be assessed but the ensuing faceoff will be in the neutral zone because of the delayed offside.

x. If the situation in Rule 82-viii occurs but the puck deflects off the glass or a teammate but does cross the blue line, no penalty will be assessed but the ensuing faceoff will be in the defending zone on the side where the puck was shot or deflected.

xi. If, during a delayed offside, the attacking team shoots the puck over the blue line and the puck deflects off a player of the defending team

and out of play, the ensuing faceoff will take place at the nearest faceoff spot in the zone from where the puck was shot.

xii. Rules for a delayed penalty supersede rules for delayed offside. If the attacking team causes a whistle on a delayed offside while the defending team is going to be penalized, the faceoff still takes place in the defending zone as per usual rules for faceoffs following penalties.

RULE 83 – DELAYED OFFSIDE/HYBRID ICING

i. If a skater who is trying to nullify an icing call advances over the attacking blue line before the puck, creating a delayed offside, icing will be called as per hybrid icing rules. If the linesman determines the skater who is offside would be first to touch the puck, an offside will be called.

ii. If the player touches the puck in Rule 83-i prior to the icing call for a delayed offside, the ensuing faceoff will take place at the faceoff spot nearest to where the puck was shot.

RULE 84 – INTENTIONAL OFFSIDE

i. An offside is ruled intentional when the attacking team commits an action intended to deliberately cause a stoppage of play.

ii. The ensuing faceoff will take place in the defending zone of the team committing the intentional offside.

iii. A delayed offside will be ruled an intentional offside if:
   1. The puck is shot at or near the goal net by the attacking team during the course of the delayed offside, forcing the goaltender to make a save;
   2. The attacking team touches the puck or tries to gain possession of the puck during the delayed offside by either playing the puck or trying to check a defending skater in possession of the puck;
   3. The attacking team scores a goal on a play which created the delayed offside (i.e., the shoot-in goes into the goal net), in which case the goal will not be allowed;
   4. The attacking team makes no effort to clear the attacking zone to cancel the offside.

iv. If the puck is shot into the attacking zone, resulting in a delayed offside, and the puck enters the goal net in any manner, the goal will not count unless it was scored by the deliberate action of a defending player. The ensuing faceoff will take place in the defending zone of the team committing the intentional offside.

v. If, while the attacking team is clearing the attacking zone, the puck accidentally hits an attacking skater inside that zone, offside will be called but not be ruled intentional.

RULE 85 – INJURED SKATER

i. If it is obvious that a skater has sustained a serious injury, on-ice officials will stop play immediately and summon the appropriate medical personnel to the ice.

ii. In all other cases, if a skater is injured and cannot continue to play or go to the players' bench, game action will continue until his team has gained possession of the puck, unless his team is in a scoring position.

iii. If a skater is injured at the same time he is assessed a penalty, he is allowed to go to the dressing room. If he has been assessed a minor, major, or match penalty, his team must immediately put a substitute skater in the penalty box to serve the penalty in full.

iv. If the injured penalized skater is able to return prior to the expiration of his penalty, he must go to the penalty box to serve the remaining time himself.

v. When game action is stopped because of an injury to a skater, he must leave the ice and cannot return until after play has resumed.

RULE 86 – INJURED ON-ICE OFFICIALS

i. In the case where an on-ice official suffers an injury during game action, play will be stopped immediately (unless one team has a scoring opportunity) to assess the severity of the injury and attend to the injured on-ice official. If the problem can be treated immediately, the injured on-ice official will skate to the players' bench of the home team or be attended to by medical personnel of the home team.

ii. If a referee is injured and is unable to continue, the remaining referee (under the four-official system) will be the sole referee. In a three-official system, one of the linesmen, selected by the referee supervisor, the injured referee, or the team leaders, will assume the referee's duties.

iii. If a linesman is injured and is unable to continue in either a four-official or three-official system, he will be replaced if the referee(s) deems it necessary.

iv. If the game is being played with standby officials, the appropriate official will enter the game when he has dressed and is ready, but the game will continue in the interim.

SECTION 7 – PLAYING RULES/PLAYER CHANGES

OVERVIEW – Players can be changed during a game in two ways: during a stoppage of play and during game action. In either case, specific rules apply as to how these changes may be carried out and under what circumstances they may not be carried out.

RULE 87 – DEFINING ON/OFF ICE

i. A player who has one skate on the ice and one skate off the ice at the players' bench is considered off the ice unless he plays the puck or engages in any action with an opponent or has both skates on the ice.

RULE 88 – PLAYER CHANGE DURING GAME ACTION

i. Player changes may occur at any time during game action provided that the changing players are within 1.5 metres (5') of the boards across the width of their players' bench, and the changing players are not involved in game action in any way.

ii. If an oncoming player leaves the 1.5 metre (5') zone and participates in game action before the departing player has at least one skate off the ice at the players' bench, the team will be assessed a penalty for too many men.

iii. If, during a player change during game action, a player coming onto the ice or coming off the ice plays the puck, makes contact with an opponent, or participates in game action while both the departing and entering players are on the ice within the 1.5 metre (5') zone, a penalty for too many men will be assessed.

iv. If player changes are made during game action and the changing players are within 1.5 metres (5') of the boards across the width of their players' bench, and the changing players are not involved in game action in any way, no penalty for too many men will be assessed.

RULE 89 – ILLEGAL ACCESS OF OPPONENT'S PLAYERS' BENCH

i. At no time is a player allowed to use the players' bench of the opposition during a game except accidentally.

RULE 90 – PLAYERS' BENCH INSIDE BLUE LINE/OFFSIDE

i. If, during a delayed offside, an attacking player in the attacking zone leaves the ice at his players' bench which extends into the attacking zone, he will be considered off the ice provided his replacement comes onto the ice in the neutral zone. If his replacement comes onto the ice in the attacking zone and the delayed offside is still in effect, the replacement must clear the attacking zone. If the remaining

attacking players have cleared the attacking zone and the linesman has cancelled the delayed offside, the replacement will be onside.

RULE 91 – PLAYER CHANGE DURING STOPPAGE

i. The changing of one or more players constitutes a player change.
ii. The home team is entitled to "last change". This means the visiting coach must put his players out on the ice first, after which time the home coach must do so as per the procedure set out below. If either team does not make its changes promptly, the referee will not permit the change.
iii. Failure by either team to comply, or tardiness to comply, or deliberate error in complying with this rule will result first in a warning from the referee and then a bench-minor penalty for delay of game.
iv. Once player changes have been made, a team is not allowed to alter its lineup on ice until after play has started after a legal faceoff.
v. Teams are not allowed to make player changes after a false faceoff.
vi. If, after player changes are made and before a legal faceoff, one or both teams incur penalties which alter the on-ice manpower of either team, teams may make further player changes.
vii. Players from the players' bench can come onto the ice after a goal only for the purpose of making changes, and not more players than those changing can come onto the ice to celebrate.

RULE 92 – PLAYER CHANGE PROCEDURE

i. The following procedure must be followed for player changes:
    1. Immediately after a stoppage of play, the referee signals to the coach of the visiting team to make his player changes;
    2. The visiting team has five seconds to make its changes;
    3. The referee raises his arm to indicate that the visiting team may no longer make player changes;
    4. With his arm still up, the referee signals to the coach of the home team to make his player changes;
    5. After five seconds, the referee drops his arm to indicate that the home team may no longer make changes;
    6. As soon as the referee drops his arm, the linesman conducting the faceoff blows his whistle to indicate that both teams have no more than five seconds to line up for the faceoff;
    7. At the end of the five seconds (sooner if the facing-off skaters are ready), the linesman drops the puck. It is the responsibility of the linesman to ensure that all skaters come into proper position for the faceoff;
    8. When a team attempts to make a player change after its allotted time, the referee will send the player(s) back to the bench and issue a warning to the coach. Any subsequent infraction of this procedure will result a bench-minor penalty for delay of game.

RULE 93 – PLAYER CHANGE ON ICING CALLS

i. A team that incurs an icing call is not allowed to make player changes prior to the ensuing faceoff. The rule applies to those players who were on the ice the moment the puck left the player's stick to produce the icing.

ii. If a team attempts to change players after it has iced the puck, the referee will issue a warning for the first offense and then assess a bench-minor penalty for delay of game for subsequent offenses.

iii. Should a team that ices the puck utilize its team timeout at this stoppage of play, it is still not allowed to make any player substitutions.

iv. A team is allowed to make a player substitution:
   1. To replace a goaltender who had been substituted for an extra player;
   2. To replace an injured player or goaltender;
   3. If either team incurs a penalty which alters on-ice manpower, the team icing the puck is allowed to make player changes, but the ensuing faceoff will take place in the defending zone of the team incurring the penalty.

v. A skater who breaks his stick on a play that is called for icing will be allowed to go to his players' bench to get a new one.

SECTION 8 – PLAYING RULES/GOALS

OVERVIEW – Specific rules apply for how goals can be scored and under what circumstances they can be disallowed.

RULE 94 – SCORING A GOAL

i. A goal is scored when a team has shot or directed the puck into the goal net and entirely over the plane of the goal line during game action and is deemed legal by the referee and/or video-goal judge (for exceptions to this rule, see Rule 99-vii).

ii. A goal is scored when the puck is put between the goal posts below the crossbar and entirely across the plane of the goal line.

iii. A goal is scored when the puck is shot, kicked, directed, or put into the goal net in any way by a defending player.

iv. A goal is scored when the puck is deflected into the goal net by accidentally striking any part of a skater's body from a shot of a teammate.

v. The puck must be whole when it crosses the plane of the goal line.

vi. Any puck shot into the goal net during a stoppage in play is not considered a goal.

vii. A goal is considered official once a faceoff has taken place at centre ice following that goal. Video evidence obtained after the ensuing faceoff which indicates the goal should not have been allowed is not admissible.

viii. Only one goal can be awarded to one team at any single instance during a game. In the case of a goal being scored without a stoppage of play and subsequently another goal is scored by either team, at which time video review shows the initial play to have been a goal, the second goal is nullified, the first goal is counted, and time is put back on the scoreclock (both playing time and, where applicable, penalty time) to indicate when the first goal was scored.

ix. If, upon further review in situation Rule 94-viii, the initial goal is ruled illegal by the video-goal judge, the subsequent goal will count and the scoreclock will not be adjusted.

x. Any penalties which occur during the two goals in Rule 94-viii or after the whistle after the second goal will be assessed except the first minor penalty to the team scored upon (as per rules regarding the nullifying of penalties when a goal is scored during a delayed penalty).

xi. The 'lacrosse-like' manoeuvre whereby a skater whips the puck into the goal net is permitted provided he does not raise his stick above the height of his shoulder at any time during the motion (see also Rule 75-ix).

xii. If a puck is deflected into the goal net by the stick or body of an attacking skater who has established position while the goaltender is in his crease prior to the puck entering the three-dimensional space

of the crease, the goal will not count and the ensuing faceoff will take place at a faceoff spot outside the blue line.

xiii. If a skater's skates are not in the goal crease in 94-xii, but his stick is, then any goal scored off the stick will be allowed provided the stick is not interfering with the goaltender's ability to play his position. If the stick is interfering, the goal will not be allowed, and the ensuing faceoff will take place at a faceoff spot outside the blue line.

xiv. For a goal to be legal, the puck must cross the plane of the goal line prior to the expiration of a period. If the scoreclock is not functioning, the video-goal judge can be consulted. In all other cases, the decision by the on-ice officials will be final.

xv. If the penalty-box attendant fails to open the penalty-box door when a penalty expires, thus delaying a skater's re-entry to the ice, and during this time the opposing team scores a goal, the goal will be allowed.

RULE 95 – GOAL CREASE AS IT PERTAINS TO SCORING GOALS

i. If a skater of the attacking team is pushed, shoved, or fouled by a defending skater to cause him to be in the goal crease when the puck enters the goal net, the goal will be allowed unless the attacking skater had sufficient time to get out of the goal crease.

ii. If the puck is loose in the goal crease and put into in the goal net by the stick of an attacking skater, the goal will be allowed.

iii. If an attacking skater is in the goal crease at the moment the puck crosses the plane of the goal line and his position in no way affects the goaltender's ability to make a save or play his position properly, the goal will be allowed.

iv. If a goaltender is outside his goal crease and an attacking skater prevents the goaltender from returning to his crease or prevents the goaltender from playing his position properly while a goal is scored, the goal will not be allowed, and the attacking skater will be assessed a minor penalty for interference.

v. The goal crease is three-dimensional and all crease rules pertain not only to the blue ice but to the air space above the blue ice to the height of the crossbar.

RULE 96 – GOALS WITH THE SKATE

i. No goal will be allowed if the puck enters the goal net as a result of a noticeable kicking motion by an attacking skater.

ii. A noticeable kicking motion is a movement of the skate along the ice or in pendulum motion as a means of propelling the puck into the goal net.

iii. If an attacking skater kicks at a puck and it is subsequently shot into the goal net by either that skater or a teammate after the goaltender has made a save, the goal will be allowed.

iv. If an attacking skater kicks the puck and it deflects directly off the goaltender or his equipment, or off a player from either team and into the goal net, the goal will not be allowed.
v. If an attacking skater turns his skate in any manner with the intention of having the puck deflect off it, and the puck enters the goal net as a result of that deflection, the goal will be allowed so long as there was no noticeable kicking motion.
vi. If an attacking skater tries to kick the puck from his skate up to his stick but fails to gain possession of the puck with his stick before the puck enters the goal net, the goal will not be allowed because a noticeable kicking motion propelled the puck into the goal net.
vii. If an attacking skater is jostling with an opponent and during this time he propels the puck into the goal net with a noticeable kicking motion while trying to maintain his balance, the goal will not be allowed. The noticeable kicking motion is the sole criterion, not the jostling with an opponent.
viii. If an attacking skater has the puck on his stick and kicks his stick to propel the puck into the goal net, the goal will not be allowed.

RULE 97 – DISALLOWING A GOAL/GAME ACTION

See also Rules 184–186 for rules pertaining to the goaltender and goal crease violations.

i. No goal will be allowed if an attacking skater kicks, throws, gloves, or otherwise directs the puck into the goal net with any part of his body or by any means other than his stick even if the puck is further deflected by a player or on-ice official after initial contact.
ii. No goal will be allowed if an attacking skater directs, deflects, or bats the puck into the goal net in any way with his stick above the height of the crossbar, even if the puck subsequently deflects off any skater, the goaltender, or an on-ice official, or bounces off the ice and in. The determining factor is where the puck makes contact with the stick in relation to the crossbar. If that part of the stick making contact with the puck is at or below the crossbar, the goal will be allowed.
iii. No goal will be allowed if the puck is directly deflected into the goal net off an on-ice official even if the puck subsequently deflects off a skater from either team or the goaltender. If the puck hits an on-ice official and is subsequently put into the goal net in any legal manner, the goal will be allowed.
iv. No goal will be allowed if the puck is under a defending player who is pushed by an attacking player, together with the puck, into the goal net.
v. No goal will be allowed if a skater enters the game illegally from his own players' bench and his team scores a goal while he is on the ice.
vi. If a skater leaves the penalty box early by his own error or an error of the penalty-box attendant, and the skater's team scores a goal while he is on the ice or has been substituted, the goal will not count and the skater must return to the penalty box to serve the remaining time

of his penalty. If other penalties are assessed during this time, they must be served as well.

vii. A referee has the right to consult the linesmen for incidents leading up to the scoring of a goal. Should a linesman witness a foul which carries with it a major penalty, game-misconduct penalty, match penalty, or unsportsmanlike-conduct penalty committed by an attacking player and which goes undetected by the referee immediately prior to a goal, the linesman can report the incident, and the referee may decide to disallow the goal and assess penalties.

viii. No goal will be allowed if the puck has completely crossed the plane of the goal line after the period has expired.

ix. No goal will be allowed if the referee has blown his whistle to stop play before the puck crosses the plane of the goal line. Such a play is not subject to review by the video-goal judge.

RULE 98 – SCORING A GOAL/GOAL FRAME OFF

i. If a defending player displaces his own goal frame and the opposing team scores a goal, the goal will be allowed provided:
   1. The opponent was in the act of shooting prior to the goal frame being displaced;
   2. The referee determines the puck would have entered the goal net had the goal frame been in its normal position.

ii. A goal will be awarded if a goaltender has been removed from the ice for an extra skater and a teammate displaces the goal frame from its normal position when an attacking skater is on a breakaway.

iii. The goal frame is considered displaced if:
   1. Either of the two goal pegs is not in its respective hole;
   2. It has come off one or both pegs;
   3. One or both of the goal posts are not flat on the ice.

iv. For all other goal frames which do not utilize pegs, the goal posts must be flat on the ice and on the goal line at the time the puck enters the goal net for a goal to be allowed.

v. If the position of the goal net is altered in any way during game action, play will be stopped if the goal net does not return to its normal position. If the goal net returns to its normal position, game action will continue.

vi. No goal will be allowed if the goal frame is displaced before the puck crosses the plane of the goal line unless provided by Rule 98-i.

RULE 99 – USE OF VIDEO-GOAL JUDGE TO DETERMINE GOALS

i. The video-goal judge may consult with the referee only at the request of the referee or by request of the video-goal judge himself. He is consulted primarily to determine the legitimacy of a goal.

ii. If a goal is scored or appears to have been scored, the referee will make his call immediately and then, if necessary, consult the video-goal

judge. It will be up to the video-goal judge to confirm the referee's call or, if there is proper evidence, refute it.

iii. In the case where video review is inconclusive, the referee's original call will stand.

iv. If the video-goal judge requests consultation with the referee on a potential goal that no on-ice official acknowledged, the opinion of the video-goal judge will be the decisive one.

v. If neither the on-ice officials nor the video-goal judge reviews a possible goal at the next stoppage of play, further review is not permitted after the ensuing faceoff.

vi. If there is no indication from the referees or video-goal judge to review a questionable play immediately following the end of a period, no review can be conducted once the players have left the ice.

vii. The following are the only situations subject to review by the video-goal judge (see Rule 45-iii for other uses):
    1. Puck crossing the plane of the goal line;
    2. Puck in the goal net prior to the goal frame being displaced;
    3. Puck entering the goal net prior to or after the expiration of a period;
    4. Puck directed or batted into the goal net by a hand or foot or deliberately directed or batted with any part of the attacking player's body into the goal net;
    5. Puck deflected into the goal net off an on-ice official;
    6. Puck struck with a high stick above the height of the crossbar by an attacking skater prior to entering the goal net.

SECTION 9 – GAME PENALTIES/DURATION AND SITUATIONS

OVERVIEW – Game penalties are assessed at the discretion of the on-ice officials.

For all infractions related to goaltenders, see Section 12 – Rules Specific to Goaltenders.

RULE 100 – WHEN PENALTIES CAN BE CALLED

i. Penalties can be called at any time during the playing of a game. This constitutes the 60 minutes of regulation play, the overtime, penalty-shot shootout, stoppages in play, and the departure of the teams from the ice to the dressing rooms.

ii. An on-ice official must witness first-hand any infraction if a penalty is to be assessed and incorporated into the official game sheet. This includes events before, during, and after the playing of the game.

iii. "Before" the game constitutes the minutes prior to the opening faceoff when the on-ice officials and players are on the ice but game action has yet to begin.

iv. Any violations of the rules committed during the pre-game skate or underneath the stands cannot be punished by the assessment of penalties during the game as the on-ice officials were not participating in events at the time. Instead, these violations will be noted by the standby referee and dealt with, if necessary, by the proper authorities.

v. No player or team official is allowed to enter the dressing room of the on-ice officials during the course of or immediately following the game. Any violation of this rule will be reported to the proper authorities.

RULE 101 – IMPLICATIONS OF PENALTIES

i. In the two-referee system, no player can be penalized by both referees for the same infraction, but the same player can be penalized by both referees for two distinct infractions.

ii. If a team being penalized is in possession of the puck, game action will be stopped immediately. If the opposing team is in possession of the puck, game action will continue until the penalized team gains control of the puck.

iii. If, during the delayed penalty, the team in possession of the puck scores into its opponent's goal, the first minor penalty will be cancelled. If a double-minor penalty were to be assessed, one minor penalty is cancelled and the other imposed. If a major, misconduct, or match penalty were to be imposed, these will still be assessed even if a goal is scored.

iv. If, during the delayed penalty, two or more minor penalties were to be assessed to more than one player and a goal is scored, the referee will ask the captain of the penalized team which penalty to cancel. The second and subsequent penalties will still be imposed. The order of the penalties assessed will not be taken into consideration.
v. If an attacking skater on a breakaway is fouled by an opponent to the degree that warrants a major and automatic game-misconduct penalty, the penalties will be imposed on the opponent regardless if the resultant penalty shot is successful or not.
vi. Upon being penalized, a skater must proceed directly to the penalty box or dressing room unless instructed otherwise by an on-ice official. Failure to do so will result in an additional bench-minor penalty.
vii. If one team is assessed more than one penalty of the same duration which affects on-ice manpower, the captain must inform the referee of the order the penalties are to be served in case further penalties result in one penalized skater being allowed to leave the penalty box before others.
viii. A skater must go to his dressing room if he is assessed a misconduct penalty in the third period which would prevent him from participating in the overtime and penalty-shot shootout.

RULE 102 – PENALTIES ON SCORECLOCK

i. Penalties are said to have expired at the exact time of the penalty on the scoreclock plus the length of the penalty. For instance, if a minor penalty is called at 4:58, it expires at 2:58. If a major penalty is assessed at 13:05, it expires at 8:05, whether or not the skater steps on the ice at that exact second. For coincident minor penalties and misconduct penalties, the skater is allowed to return to the ice only at the first whistle after the penalty time has been served.
ii. Only penalties displayed on the scoreclock allow a team to gain extra skaters during game action when they expire. Penalties not displayed on the scoreclock include coincident minors or majors, misconducts, game misconducts, and coincident match penalties.
iii. Penalties which must be displayed on the scoreclock include minors, double minors, majors, and match.
iv. Penalties with a delayed start time will be displayed on the scoreclock only when their time has started.
v. In the case of misconduct penalties, the skater is allowed to return to the ice only after the first whistle after the expiration of his penalty.
vi. In the case of more than one penalty to a team, skaters are allowed to return to the ice only when their own penalty has expired. A skater who comes onto the ice after a teammate's penalty has expired – not his own – will be subject to further penalty.

RULE 103 – PLAYING SHORT-HANDED

i. A team is short-handed by virtue of having fewer players on the ice as a result of one or more penalties during game action than its opponent.

ii. If the opposition scores a goal while a team is short-handed, the penalized skater can return to the ice immediately if the penalty being served is a minor or bench-minor penalty which makes the team short-handed.

RULES 104 –110 – DURATION OF PENALTIES

SUMMARY (for one player)

Minor/Bench-minor penalty = 2 minutes on scoreclock (2 PIMs)

Major penalty = 5 minutes on scoreclock + automatic game misconduct, time not on scoreclock (25 PIMs)

Minor + Major penalty = 5 minutes on scoreclock, then 2 minutes on scoreclock + automatic game misconduct, time not on scoreclock (27 PIMs)

Misconduct penalty = 10 minutes, time not on scoreclock (10 PIMs)

Minor + Misconduct penalty = 2 minutes on scoreclock + 10 minutes, time not on scoreclock (12 PIMs)

Minor + Game Misconduct penalty = 2 minutes on scoreclock + balance of the game, time not on scoreclock (22 PIMs)

Game Misconduct penalty = balance of the game, time not on scoreclock (20 PIMs)

Match penalty = 5 minutes on scoreclock + balance of the game, time not on scoreclock (25 PIMs) + automatic one-game suspension

RULE 104 – DURATION OF PENALTIES/MINOR – BENCH MINOR

i. A minor penalty constitutes two minutes of playing time and must be served in full by the penalized skater. No substitution of this skater is allowed in on-ice manpower. If the opposition scores during the ensuing power play, the first minor penalty is considered over and the skater can leave the penalty box.

ii. If a team scores a goal on a penalty shot during a power play, the penalized skater is not allowed to return to the ice.

RULE 105 – DURATION OF PENALTIES/MAJOR

i. A major penalty constitutes five minutes of playing time and carries with it an automatic game-misconduct penalty. No substitution of this skater is allowed in on-ice manpower for the five minutes. The penalized player must go to the dressing room, and a teammate designated by the coach through the captain must serve the penalty in full, regardless of how many goals the opposition scores. Once the five minutes has expired, the team may replace the skater for the game misconduct portion of the penalty. A review of the

penalty by the proper authorities is automatically conducted after the game.

RULE 106 – DURATION OF PENALTIES/MINOR AND MAJOR

i. When a skater is assessed a minor and major penalty (and automatic game-misconduct penalty) at the same time, the major penalty is served first after which the minor penalty begins. The penalized player must go to the dressing room, and a player designated by the coach through the captain must serve the assessed penalties.

ii. When a minor and major penalty are imposed at the same time on two players of the same team while the team is already short-handed, the minor penalty is considered the first to be served and the start of the major penalty will not begin until the first penalty has expired. The penalized skater with the major penalty must go to the dressing room, and a player designated by the coach through the captain must serve the assessed penalties.

RULE 107 – DURATION OF PENALTIES/MISCONDUCT

i. A misconduct penalty constitutes ten minutes of playing time, but immediate substitution in on-ice manpower is allowed. The skater must serve his misconduct in full unless he is injured, in which case a teammate designated by the coach through the captain must sit in the penalty box in his place. The skater is not allowed to leave the penalty box until the first whistle after ten minutes of playing time has elapsed.

ii. If a player is assessed a second misconduct any time during a game, it will become an automatic game-misconduct penalty instead. He must go to the dressing room but may be substituted immediately on ice, and no teammate has to serve his penalty.

iii. If a goaltender is assessed a misconduct penalty, it must be served by a skater on the ice at the time of the whistle to stop play who is designated by the coach through the captain.

RULE 108 – DURATION OF PENALTIES/MINOR AND MISCONDUCT

i. When a skater is assessed a minor and misconduct penalty at the same time, the penalized team must immediately put an additional skater in the penalty box to serve the minor penalty. No substitution of this skater is allowed in on-ice manpower. At the expiration of that penalty, the teammate may leave the penalty box but the skater who committed the infractions must remain in the penalty box to serve the misconduct penalty. Even though a teammate serves the minor penalty, the misconduct penalty does not begin until the expiration of any lesser penalties.

RULE 109 – DURATION OF PENALTIES/GAME MISCONDUCT

i. A game-misconduct penalty requires the penalized player or team official to go to the dressing room, but immediate substitution on ice is allowed.

ii. A player who receives two game-misconduct penalties in the same game or different games of a tournament or event is automatically suspended for one further game.

RULE 110 – DURATION OF PENALTIES/MATCH

i. A match penalty results in the immediate expulsion of the player or team official from the game and a five-minute penalty served by a teammate designated by the coach through the captain. No substitution of this skater is allowed in on-ice manpower until after the expiration of the five minutes.

ii. A match penalty carries with it an automatic (and minimum) one-game suspension.

RULE 111 – PENALTY SITUATIONS

i. Only penalties that are displayed on the scoreclock affect on-ice manpower (except penalties which have a delayed start time).

ii. For a penalized skater to return to the game as a result of an opponent's goal, his team must have been short-handed by a minor or bench-minor penalty at the time of the goal (not counting a delayed penalty). In the case where more than one skater is penalized, the first minor or bench-minor penalty will terminate (unless it were a coincident minor or bench-minor penalty with an opposing skater, in which case the next minor or bench-minor penalty will be cancelled).

iii. If there is a delayed-penalty call for a minor or bench-minor penalty against a team already short-handed by reason of a major or match penalty, and the opposition scores before the play can be stopped to assess the new penalty, that signalled penalty will be cancelled because of the goal.

iv. If a delayed penalty is about to be called against a player which will result in a minor, major and automatic game misconduct, or match penalty but the opposing team scores during the delayed penalty, the minor penalty is cancelled but the major and game misconduct or match penalty will still be assessed. The skater must go to the dressing room while a teammate designated by the coach through the captain serves the major or match penalty.

v. If a team incurs two or more penalties of the same duration at the same stoppage, the captain of that team must notify the referee before the start of game action which skater will be first out of the penalty box (either after the scoring of a power-play goal by the opposition or at the expiration of the penalties when the skaters leave the penalty box). The referee will inform the scorekeeper accordingly.

RULE 112 – COINCIDENT PENALTIES

See also IIHF Case Book – Coincident Penalties

i. When an equal number of minor, major, or match penalties of the same duration are assessed to both teams at the same stoppage of play, the penalties are considered coincident penalties.

ii. When penalties are assessed to both teams at the same stoppage of play, the referee will cancel as many penalties of equal duration (minor, bench minor, double minor, major and automatic game misconduct, match) to each team as possible.

iii. If teams are playing 5-on-5 and only one minor or bench-minor penalty is assessed to each team, teams will play 4-on-4. The two players must go to the penalty box without substitution, and they can return to the ice at the expiry of the penalties.

iv. If one or both penalized players in Rule 112-iii are assessed a misconduct penalty in addition to a minor penalty, teams will play 4-on-4 and an additional skater will have to go to the penalty box to serve the minor penalty while the penalized player will serve the entire 12 minutes. The player serving the minor penalty can return to the ice at the expiry of that penalty.

v. When penalties as in Rule 112-i are assessed and one team is short-handed, immediate substitution is allowed for an equal number of coincident penalties of equal duration to each team and will not have a bearing on delayed start time of penalties (see Rule 113).

vi. If teams are playing with manpower that is not 5-on-5, there is no further reduction of manpower on ice as a result of penalties of equal duration and number which can cancel each other.

vii. If multiple penalties are assessed to both teams, equal numbers of minor, major (and automatic game misconduct), and match penalties will be cancelled as per rules for coincident penalties. Any differential in penalty times will be displayed on the scoreclock, and players will serve the time accordingly. They will not be allowed to return until the first stoppage in play after the expiration of their penalties.

viii. Players who receive major or match penalties which are coincident penalties must go to their dressing room but no teammate is required in the penalty box unless one of the penalties appears on the scoreclock.

ix. Where goaltenders are involved, see Rules 207-ii and 207-iv.

x. In the application of coincident penalties, minor and bench-minor penalties are considered the same.

RULE 113 – DELAYED START TIME OF PENALTIES

i. No team may have fewer than three skaters on ice at any time during game action.

ii. Players must always return to the ice in the order of the expiry of their own penalties.

iii. If a third or subsequent player of any team is assessed a penalty during regulation time which requires him to go to the penalty box, and two teammates are already serving penalties, the penalty time of the third player or any subsequent players will not start until the penalty time of one of the first two players has elapsed. The third or subsequent skaters must still proceed to the penalty box as soon as their penalties have been assessed, but they can be replaced on the ice by a substitute until their penalty time begins.

iv. Once the first penalty of three or more players has elapsed, the skater cannot return to the ice until the first whistle on or after the expiration of his penalty.

RULE 114 – DELAYED PENALTY CALL

i. For most penalties, a player from the offending team must be in control of the puck for game action to be stopped and the penalties assessed.

ii. A touch of the puck or glancing contact between stick and puck does not constitute control unless that contact results in a goal for the team being penalized.

iii. If the offending team is not in control of the puck, the referee will raise his arm signifying his intention to call a penalty, but he will not stop game action until:
   1. The offending team has gained control of the puck;
   2. The puck is frozen;
   3. The puck goes out of play;
   4. The team in control commits a foul of its own;
   5. Either team ices the puck.
   6. Other reasons specified by these rules.

iv. If the team in control of the puck during a delayed-penalty situation scores into its own goal, the goal will be credited to the opposition, but the penalty will still be assessed.

v. A team being penalized during a delayed-penalty situation cannot score a goal by its own means.

vi. If, after the referee has raised his arm, a goal is scored by the team in control of the puck, the goal is allowed and the referee will ask the captain of the penalized team which penalty – if more than one is intended to be called – is cancelled.

vii. If the team being penalized is already short-handed and its opponent scores a goal during a delayed-penalty call, the earlier minor penalty being served is automatically terminated and all new penalties being signalled will be assessed.

viii. If there is a delayed penalty to a team for a minor or bench-minor penalty, and that team is already short-handed with a major or match penalty, and the opposition scores, the delayed penalty will be cancelled but the major or match penalty remains on the scoreclock.

ix. If a team incurs a penalty and scores a goal on the same play so quickly that the referee does not have time to blow his whistle before

the puck enters the goal net, he can still nullify the goal and assess the penalty after stopping play.

RULE 115 – PENALTIES IN OVERTIME

i. Regardless of the length of the overtime, it must be played four skaters and one goaltender a side if there were no penalties carried over from the end of regulation time or assessed prior to the start of the overtime period which affect the on-ice manpower of either team.
ii. If a team incurs a minor penalty in overtime, the teams will play 4-on-3.
iii. Coincident penalties in overtime do not affect on-ice strength.
iv. If a team is penalized such that a two-man advantage occurs, the offending team will remain at three skaters while the opposing team will be allowed a fifth skater. At the first stoppage of play after the two-man advantage is no longer in effect, the numerical strength of the teams will be adjusted to either 4-on-4 or 4-on-3.
v. If there is either a 5-on-4 or 4-on-3 manpower advantage at the end of regulation time, the overtime will begin with teams playing 4-on-3.
vi. If there is a 5-on-3 manpower advantage at the end of regulation time, the overtime will begin with teams playing 5-on-3. With the expiration of penalties, due to continuous action, on-ice manpower may get to 5-on-4 or 5-on-5. At the first stoppage of play, on-ice manpower will be adjusted to 4-on-4 or 4-on-3.
vii. If teams are playing 4-on-4 at the end of regulation time with skaters in the penalty box, overtime starts 4-on-4 and skaters exit the penalty box as normal to 5-on-4 and 5-on-5. At the first stoppage of play, manpower will be adjusted to 4-on-3 or 4-on-4.
viii. If teams are playing 4-on-4 at the end of regulation time with skaters in the penalty box serving coincident penalties, overtime starts 4-on-4.
ix. If teams are playing 3-on-3 at the end of regulation time, overtime starts 3-on-3. After on-ice manpower reaches 5-on-4 or 5-on-5, at the first stoppage of play manpower will be adjusted to 4-on-3 or 4-on-4.

SECTION 10 – DESCRIPTION OF GAME PENALTIES

OVERVIEW – These are definitions, explanations, and interpretations of fouls during a game (which constitutes 60 minutes of regulation time, overtime, penalty-shot shootout, and the time immediately after the end of the game when players leave the ice and go to their respective dressing rooms).

RULE 116 – ABUSE OF OFFICIALS

DEFINITION: An attempt by a player or team official to usurp the power of an on-ice official, demean or degrade an on-ice official, call into question the integrity or ability of an on-ice official, or physically confront an on-ice official.

i. Minor Penalty
   1. A player who bangs the protective glass in protest of an on-ice official's decision;
   2. A player who bangs the boards with his stick or other objects to protest an on-ice official's decision.

ii. Bench-Minor Penalty
   1. An unidentifiable player or team official who uses obscene, profane, or abusive language or uses the name of any official coupled with any vociferous remarks;
   2. A penalized player who does not go directly to the penalty box or dressing room as instructed by an on-ice official;
   3. A team official who bangs the boards with a stick or other object to protest an on-ice official's decision.

iii. Misconduct Penalty
   1. A player who challenges or disputes the ruling of an on-ice official;
   2. A player who shoots the puck intentionally out of reach of an on-ice official who is retrieving it;
   3. A player who enters or remains in the on-ice officials' crease while they are in consultation with each other or reporting to off-ice officials;
   4. A captain or alternate captain, on ice or off, who complains to an on-ice official about how he is conducting the game, interpreting the rules, or handling game action;
   5. A player who bangs the boards with his stick or other objects to protest an on-ice official's decision for which they have been already been assessed a minor or bench- minor penalty;
   6. A player who bangs the protective glass in protest of an on-ice official's decision for which he has been already been assessed a minor penalty.

iv. Game-Misconduct Penalty
   1. A player or team official who uses obscene, profane, or abusive language directed to an on-ice official for which he has been

already been assessed a minor or bench-minor penalty. When this conduct occurs after expiration of the game, on or off the ice, the game-misconduct penalty can be applied without the necessity of having previously assessed a minor or bench-minor penalty.

v. Match Penalty
   1. A player or team official who makes contact in any way with an on-ice official and is detrimental to the conducting of a game;
   2. A player who swings his stick at an on-ice official.

RULE 117 – BENCH-MINOR

DEFINITION: Conduct detrimental to the game or violation of the rules from the players' bench from either an identifiable or unidentifiable player or team official.

i. An infraction emanating from the players' bench is punishable by a bench-minor penalty.
ii. Any action on ice that warrants a misconduct or game misconduct penalty is punished equally if it comes from an identifiable player or team official at the player's bench.
iii. A bench-minor penalty can be served by any skater who was on the ice at the time the whistle stopped play or otherwise provided by these rules.
iv. If the head coach of a penalized team refuses to designate a skater to serve a bench-minor penalty or a penalty to a goaltender, the referee will name a skater of his choice.

RULE 118 – BITING

DEFINITION: A player who bites any part of an opponent's body.

i. A player who bites an opponent will be assessed a match penalty.

RULE 119 – BOARDING

DEFINITION: A player who bodychecks, elbows, charges, or trips an opponent in such a manner that causes the opponent to be thrown violently into the boards.

i. A boarding penalty is punishable by at least a minor penalty.
ii. A player who injures or recklessly endangers an opponent as a result of boarding will be assessed either a major and game-misconduct penalty or a match penalty.
iii. "Rolling" an opponent in possession of the puck along the boards who is trying to squeeze by a player is not considered boarding.

RULE 120 – BROKEN STICK/PLAYING WITH – REPLACING

DEFINITION: A stick that is not fully intact, has a broken blade or shaft, or is no longer whole is considered broken and, as such, illegal.

i. A player must drop a broken stick immediately. If he participates in game action with a broken stick he will be assessed a minor penalty.
ii. A skater who uses a goaltender's stick during game action will be assessed a minor penalty.
iii. A player whose stick is broken is forbidden to receive a stick thrown onto the ice from either the players' bench or from a spectator, but he may receive a stick from a teammate on the ice at the time without having to proceed to his players' bench to obtain a new one. This exchange, however, must be made hand-to-hand. A teammate who throws, tosses, slides, or shoots a stick to him will be assessed a minor penalty.
iv. Rule 120-iii includes situations where a player has lost an intact stick and a teammate is trying to get it to him.
v. At no time is a skater allowed to grab an opponent's stick: (1) from an opponent on ice who may either be holding the stick or who may have dropped it to the ice; (2) from an opponent sitting on his players' bench; (3) from the stick rack at the opponent's bench. Any violation of this rule will result in a minor penalty.
vi. A skater who participates in game action while taking a replacement stick to a skater or goaltender will be assessed a minor penalty.
vii. If a player receives a stick during game action from a teammate in the penalty box, the player receiving the stick will be assessed a minor penalty.
viii. A skater who does not have a skater's stick in his hands may still participate in game action.

RULE 121 – BUTT-ENDING

DEFINITION: A player who slides the top hand on his stick down the shaft to create a dangerous protrusion which he drives into the body of an opponent.

i. An attempt to butt-end is punishable by a double minor and misconduct penalty.
ii. A player who butt-ends an opponent will be assessed either a major and automatic game-misconduct penalty or a match penalty.
iii. A player who injures or recklessly endangers an opponent by butt-ending will be assessed a match penalty.

RULE 122 – CHARGING

DEFINITION: A player who, after skating towards an opponent, checks him with unnecessary force or who runs at or jumps into an opponent.

i. A player who checks an opponent with unnecessary force or who runs at or jumps into an opponent will be assessed at least a minor penalty.
ii. A player who makes physical contact with an opponent after the whistle has been blown but who had sufficient time to avoid such contact will be assessed at least a minor penalty for charging.

iii. A goaltender is not “fair game” simply because he is outside of the goal crease. A minor penalty for interference or charging is warranted where an opponent makes unnecessary contact with a goaltender.
iv. A player who injures or recklessly endangers an opponent as a result of charging will be assessed a major penalty and automatic game-misconduct penalty or match penalty.

RULE 123 – CHECKING FROM BEHIND

DEFINITION: A player who delivers a check to a vulnerable player who is not aware of the impending hit or who is unable to protect or defend himself from such a hit. The point of contact is the back of the body.

i. A player who hits an opponent from behind into the boards, the goal frame, or in open ice in any manner will be assessed at least a minor and misconduct penalty.
ii. A player who recklessly endangers an opponent as a result of checking from behind will be assessed a major penalty and game-misconduct penalty.
iii. A player who injures an opponent as a result of checking from behind will be assessed a match penalty.
iv. If the skater being checked turns his back towards an opponent and puts himself in a vulnerable position immediately before a check to create a checking from behind situation, no penalty for checking from behind will be assessed (although other penalties might still be assessed).

RULE 124 – CHECKING TO THE HEAD OR NECK

DEFINITION: A player who directs a hit of any sort, with any part of his body or equipment, to the head or neck of an opposing player or drives or forces the head of an opposing player into the protective glass or boards. This rule supersedes all similar actions regarding hits to the head and neck except those related to fighting.

i. There is no such thing as a clean hit to the head. Whether accidental or intentional, every direct hit to the head or neck of an opponent will be penalized.
ii. A player who directs a check to the head or neck of an opponent will be assessed one of: (1) a minor penalty and misconduct penalty; (2) a major penalty and automatic game-misconduct penalty; (3) a match penalty.
iii. A player who injures or recklessly endangers an opponent as a result of checking to the head or neck will be assessed a match penalty.
iv. A penalty for checking to the head or neck will be assessed if one of the following occurs when a player checks an opponent:
    1. The skater directs a hit with any part of his body or equipment to the head or neck of an opponent;
    2. The skater drives or forces the head of an opponent into the protective glass or boards by using any part of his upper body;

3. The skater extends and directs any part of his upper body to make contact with the head or neck of an opponent;
4. The skater extends his body upward or outward in order to reach his opponent or uses any part of the upper body to make contact with an opponent's head or neck;
5. The skater jumps (leaves his skates) to deliver a blow to the head or neck of an opponent.

v. If a skater skates with his head up, is in possession of the puck, and is expecting a check, an opponent does not have the right to hit him in the head or neck.

vi. If the primary force of a blow is initially to the body area and then contact slides up to the head or neck area, a penalty for checking to the head or neck will not be assessed.

vii. A skater who delivers a check to an opponent who is skating with the puck with his head down in the direction of the skater, and does not use an upward motion or drive his body up into the opponent, will not be penalized for checking to the head or neck.

viii. If a skater maintains his position in the normal course of game action as an opponent runs into him, the ensuing contact will not be considered checking to the head or neck unless conditions in Rules 124-iv or 124-v are violated.

RULE 125 – CLIPPING

DEFINITION: Clipping is the act of a player who lowers his body with the express intention of delivering a check to an opponent's knee area.

i. A player who delivers a check in a clipping manner or lowers his own body to deliver a check to an opponent's knee area will be assessed at least a minor penalty.

ii. A player who crouches down near the boards to avoid being body-checked and who, as a result, causes an opponent to tumble over him, will be assessed at least a minor penalty.

iii. A player who injures or recklessly endangers an opponent by a clipping action will be assessed a major penalty and game-misconduct penalty or match penalty.

RULE 126 – CLOSING HAND ON PUCK

DEFINITION: Although a skater may bat at the puck with his glove or catch it and place it on the ice immediately, he is not allowed to palm the puck (i.e., keep it in his glove), hold it for longer than it takes to put it on the ice, or skate with it in his glove.

i. A skater who catches the puck and holds it while stationary or skates with it in his glove either to avoid an opponent or to gain clear possession of it will be assessed a minor penalty for closing his hand on the puck.

ii. A skater who picks the puck up from the ice with his glove or hand outside his own goal crease during game action will be assessed a minor penalty.

iii. A skater who covers the puck with his glove on the ice outside his own goal crease will be assessed a minor penalty.
iv. If a skater picks the puck up from the ice with his glove, conceals, or covers the puck with his glove on the ice inside the three-dimensional area of his own goal crease while his goaltender is on the ice, a penalty shot will be awarded to the opposition.

RULE 127 – CROSS-CHECKING

DEFINITION: A player who delivers a check to the body of an opponent with both hands on the stick and no part of the stick on the ice.

i. A player who cross-checks an opponent will be assessed at least a minor penalty.
ii. A player who injures or recklessly endangers an opponent by cross-checking will be assessed a major penalty and automatic game-misconduct penalty or match penalty.

RULE 128 – DANGEROUS EQUIPMENT

DEFINITION: Pads and protective equipment made of any material likely to cause injury are considered dangerous, and their use is strictly prohibited.

i. A referee can prohibit the use of any player equipment he feels might cause injury.
ii. The team of a player who participates in game action with illegal equipment will first be issued a warning by the referee. Failure to comply with the warning to adjust, replace, or secure any equipment as per the referee's instructions will mean any player from that team subsequently violating rules for dangerous equipment will be assessed a misconduct penalty.
iii. If a referee deems a skater's stick to be dangerous, the stick must be removed from the game without penalty. If the skater subsequently uses the stick, he will be assessed a misconduct penalty.
iv. The referee can request that a player remove any personal accessories regarded as dangerous. If these personal accessories are difficult to remove, the player should tape them or put them safely under his game sweater in such way that they are no longer dangerous. The player will be required to leave the ice during this process and a warning will be issued to his team. Failure to comply with the warning as per the referee's instructions will mean any player from that team subsequently violating rules for personal accessories will be assessed a misconduct penalty.
v. Included in dangerous equipment is a cracked or damaged cage or visor. Although a player is allowed to finish his shift with such damage, it must be fixed or replaced prior to his next shift. Failure to do so will result first in a warning from the referee and then a misconduct penalty.

RULES 129–137 – DELAY OF GAME

DEFINITION: An act either intentional or accidental which slows the game, forces game action to be stopped, or hinders the start of game action.

RULE 129 – DELAY OF GAME/ADJUSTMENT OF EQUIPMENT

i. A player who stops game action or delays the start of game action to repair or adjust his equipment will be assessed a minor penalty.

RULE 130 – DELAY OF GAME/DISPLACED GOAL NET

i. A player who deliberately displaces the goal net from its normal position will be assessed a minor penalty.
ii. If a player deliberately displaces his own goal net from its normal position during the last two minutes of regulation time, or at any time in overtime, the referee will award the opposing team a penalty shot.
iii. If a player deliberately displaces his own goal net from its normal position when an attacking skater is on a breakaway, the referee will award the opposing team a penalty shot.
iv. If, when a goaltender has been removed from the ice, a teammate displaces their goal net from its normal position when an attacking skater is on a breakaway, the referee will award a goal to the opposing team.
v. If the goal net becomes displaced during game action as a result of some action by the attacking team as the defending team gains possession of the puck with a clear chance to move up ice, there will be no whistle until puck possession changes again. If the defending team moves up ice and scores a goal, the goal will be allowed.
vi. If possession in Rule 130-v changes inside the defending team's blue line, the ensuing faceoff will occur at one of the faceoff spots in the neutral zone nearest the defending team's blue line.
vii. If possession in Rule 130-v changes in the neutral zone or attacking zone of the defending team, the ensuing faceoff will occur at the nearest faceoff spot to where play was stopped.

RULE 131 – DELAY OF GAME/FALLING ON THE PUCK

i. A skater who falls on, holds, or gathers the puck into his body or equipment to create a stoppage in play will be assessed a minor penalty. If, however, a puck becomes lodged in a skater's skates or equipment as he blocks a shot or pass, game action will be stopped but no penalty assessed.
ii. A skater who uses his hands to conceal the puck in his palm or equipment to force a whistle will be assessed a minor penalty.

RULE 132 – DELAY OF GAME/FREEZING THE PUCK UNNECESSARILY

i. A skater who holds or freezes the puck with his stick, skates, or body along the boards or in open ice when not being pressured by an opponent will be assessed a minor penalty.

RULE 133 – DELAY OF GAME/GOAL CELEBRATION

i. Players from the players' bench can come onto the ice after a goal only for the purpose of making changes, and not more players than those changing can come onto the ice to celebrate. Violation of this rule will result in a warning to both teams by the referee, and further violation will result in a bench-minor penalty.

RULE 134 – DELAY OF GAME/LATE LINEUP

i. A coach who does not send out the required number of players in a timely manner to start a period, including overtime, will be assessed a bench-minor penalty.

RULE 135 – DELAY OF GAME/SHOOTING OR THROWING THE PUCK OUT OF PLAY

i. A player who shoots, throws, or bats the puck directly out of the playing area from inside his defending zone anywhere in the rink (except where there is no protective glass) during game action, without any deflection, will be assessed a minor penalty. The determining factor will be the position of the puck when it is played.
ii. No penalty will be assessed if a player shoots the puck directly over the boards at the players' benches but not over the protective glass behind the players' benches.
iii. A player who deliberately shoots the puck out of play anywhere on the ice during play or after a stoppage will be assessed a minor penalty.
iv. A player who lifts the puck from the defending zone and hits the scoreclock or any structural object above the ice surface, causing a stoppage of play, will not be assessed a penalty.

RULE 136 – DELAY OF GAME/SUBSTITUTION AFTER AN ICING CALL

i. A team charged with icing cannot substitute any of its players except:
   1. To replace a goaltender who had been substituted for an extra skater;
   2. To replace an injured player or goaltender;
   3. If either team incurs a penalty which alters on-ice manpower, the team icing the puck is allowed to make player changes, but the ensuing faceoff will take place in the defending zone of the team incurring the penalty.

ii. A coach who attempts to make an illegal substitution after an icing call, forcing a delay in the game while the referee or linesmen organizes the correct lineup, will be issued a warning by the referee for the first violation. A coach who attempts for a second time to make substitutions for the purpose of delaying the ensuing faceoff will be assessed a bench-minor penalty.

RULE 137 – DELAY OF GAME/VIOLATION OF FACEOFF PROCEDURES

i. When a skater not taking the faceoff enters the faceoff circle before the puck is dropped, the skater on his team taking the faceoff must be replaced. For a second violation by any skater on that team at the same faceoff, the offending team will be assessed a bench-minor penalty.
ii. When a skater taking the faceoff has been removed from the faceoff by an on-ice official and another skater of the same team delays taking up his proper position after a warning, the offending team will be assessed a bench-minor penalty.
iii. A skater who lines up for a faceoff in an offside position or improperly in any way and, after a warning from an on-ice official continues to line up offside or improperly, will be assessed a minor penalty.

RULE 138 – DIVING OR EMBELLISHMENT

DEFINITION: A player who blatantly embellishes a fall or fakes an injury in attempt to draw a penalty by his action.

i. A player who embellishes a foul or pretends to have been fouled by an opponent will be assessed a minor penalty.

RULE 139 – ELBOWING

DEFINITION: A player who uses his elbow to foul an opponent.

i. A player elbowing an opponent will be assessed at least a minor penalty.
ii. A player who injures or recklessly endangers an opponent by elbowing will be assessed a major penalty and automatic game-misconduct penalty or match penalty.

RULE 140 – ENGAGING WITH SPECTATORS

DEFINITION: A player or team official who makes physical contact with a spectator during the course of a game, including stoppages in play and intermissions.

i. A player or team official who physically confronts, retaliates, or engages with a spectator will be assessed a match penalty.

RULE 141 – FIGHTING

DEFINITION: A player who punches an opponent during game action, after a whistle, or any time during the regular course of a game during a prolonged player confrontation.

i. A player who starts a fight will be assessed a match penalty.

ii. A player who in any way retaliates to being punched will be assessed at least a minor penalty.

iii. A player who removes his glove(s) or helmet with the intention of engaging in a confrontation with an opponent will be assessed a misconduct penalty in addition to any other penalties.

iv. If there is a clear instigator and aggressor in a fight, that player will be assessed a minor penalty as the aggressor in addition to any other penalties he may incur.

v. If there is no clear instigator or aggressor in a fight, both players can be assessed match penalties.

vi. A player who is on the ice and is the first to intervene in a fight already in progress (third man in) between two opposing players will be assessed, in additional to any other penalties incurred during the incident, a game-misconduct penalty. The degree of intervention is the criterion for interpretation of enforcement.

vii. A player who tries to fight or continues to fight after he has been ordered by the referee to stop, or who resists a linesman who is trying to circumvent the continuation of a fight, will be assessed a double minor penalty or a major penalty and automatic game-misconduct penalty or a match penalty.

viii. If a fight involves one player on the ice with another player off it, both players will be assessed a misconduct penalty or a game-misconduct penalty or a match penalty.

ix. A team official who is involved in a fight, on ice or off, will be assessed either a game-misconduct penalty or a match penalty.

x. The first player from either team to leave the players' bench or penalty box during a player confrontation on ice will be assessed a double-minor penalty and an automatic game-misconduct penalty. Subsequent players who leave the players' bench during a player confrontation will be assessed a misconduct penalty. Subsequent skaters who leave the penalty box during a player confrontation will be assessed a minor and game-misconduct penalties. These penalties will be served at the expiration of all previous penalties. The act alone of leaving either the players' bench or penalty box constitutes a violation of these rules, even if the players do not engage in fighting once they are on the ice.

xi. Player substitutions (i.e., line changes) made prior to a player confrontation are allowed, but any player subsequently becoming involved in a player confrontation will be penalized as if he left players' bench or penalty box to participate in that confrontation.

xii. If players of both teams leave their respective benches at the same time, or if players from one team leave their players' bench after

seeing players from the other team do so, the first identifiable player of each team will be penalized under this rule.

xiii. A maximum of five misconduct and/or game-misconduct penalties per team can be assessed under this rule.

xiv. A player cannot be assessed both a match penalty and a game-misconduct penalty for continuing a fight.

RULE 142 – HEAD-BUTTING

DEFINITION: A player who uses his head, with or without his helmet on, to strike an opponent.

i. A player who either attempts to head-butt or succeeds in head-butting an opponent will be assessed a match penalty.

RULE 143 – HIGH-STICKING

DEFINITION: A player who carries his stick or any part of it above the height of his shoulders and who strikes an opponent with any part of it.

i. A player who makes contact with an opponent with a high stick will be assessed at least a minor penalty.

ii. A player who injures an opponent accidentally by a high-sticking foul will be assessed a double-minor penalty.

iii. A player who injures an opponent by a careless high-sticking foul will be assessed either a major penalty and automatic game-misconduct penalty or a match penalty.

iv. A player who makes contact with any part of an opponent's upper body while winding up to shoot or while following through on a shot or pass is subject to all penalties for high-sticking.

RULE 144 – HOLDING

DEFINITION: A player who impedes the movement of an opponent with one or both hands, arms, legs, or in any other way to prevent him from skating freely.

i. A player who holds an opponent will be assessed a minor penalty.

ii. There are three common methods of holding:

1. A player who grabs an opponent with one or both arms with the sole intent of preventing that opponent from skating freely with or without the puck;
2. A player who uses the boards to pin an opponent using his arms or upper or lower body to prevent that opponent from moving away from the boards and who makes no attempt to play the puck;
3. A player who grabs the sweater of an opponent to restrain his free movement or to slow him down.

RULE 145 – HOLDING THE STICK

DEFINITION: A player who grabs an opponent's stick with one hand or two to prevent him from skating, playing the puck, or otherwise playing the game freely, or any act of preventing an opponent from using his stick.

i. A player who holds an opponent's stick will be assessed a minor penalty.

RULE 146 – HOOKING

DEFINITION: A player who uses his stick to impede the progress or interfere with an opponent, with or without the puck.

i. A player who hooks an opponent will be assessed at least a minor penalty.
ii. There are four common methods of hooking:
    1. A player who hooks the arm, hand, or glove of an opponent who is about to make a pass or take a shot;
    2. A player who makes contact with any part of an opponent's body using his stick during a one-on-one competition for the puck;
    3. A player who uses his stick against an opponent's body to prevent an opponent from maintaining puck possession;
    4. A player who uses his stick to prevent an opponent from skating freely.
iii. A player who injures or recklessly endangers an opponent by hooking will be assessed either a major penalty and automatic game-misconduct penalty or a match penalty.

RULE 147 – ILLEGAL STICK – STICK MEASUREMENT

DEFINITION: Players must use legal sticks that conform to IIHF standards.

i. The captain of a team may request a stick measurement at any stoppage of play. If the measurement determines a stick to be illegal, the offending player will be assessed a minor penalty and the stick will be returned to the players' bench by the referee.
ii. The player whose stick is to be measured must be in possession of the stick at the time of the request. He may be on the bench or on the ice, but the referee must make visual confirmation that the stick in question belongs to the player.
iii. If the measurement determines that the stick is legal, the team requesting the measurement will be assessed a bench-minor penalty for delay of game. The penalty must be served by anyone on the ice at the time the measurement was requested.
iv. There is no limit to the number of stick-measurement requests a team may make in a game, but only one measurement per stoppage of play is allowed and by only one team.
v. If a player refuses to surrender his stick or destroys his stick or any part of his equipment for measurement when requested to do so by the referee, this equipment will be regarded as illegal and the player will be assessed a minor and misconduct penalty.

vi. A stick measurement can be requested after a goal in regulation time, but if the stick is deemed illegal the goal will still be allowed. The same rule applies for overtime and the penalty-shot shootout.

RULE 148 – INCORRECT ACCESS TO OR FROM PENALTY BOX

DEFINITION: A skater who fails to enter or leave the penalty box by way of the ice surface.

i. A skater who uses a part of the arena other than the ice surface to enter or exit the penalty box will be assessed a minor penalty.

RULE 149 – INJURED SKATER REFUSING TO LEAVE THE ICE

DEFINITION: A player who is unable to continue to play or incapable of leaving the ice of his own ability must leave the ice if game action is stopped to attend to his injuries.

i. A player who is injured and requires medical attention on ice is required to go to the bench, once able, at least until after the ensuing faceoff. A skater who refuses to comply will be assessed a minor penalty. If he still refuses to leave after being assessed a minor penalty, he will be assessed a further misconduct penalty.
ii. A player who is bleeding is not allowed to return to the game until his wounds have been sufficiently bandaged or stitched to prevent the free flow of blood. If he returns without proper protection or with blood-stained equipment of any sort, he will be assessed a minor penalty.
iii. A player who lies on the ice either faking an injury or refusing to get up off the ice will be assessed a minor penalty.

RULE 150 – INTERFERENCE

DEFINITION: A player who obstructs or prevents an opponent without possession of the puck from skating, receiving a pass, or moving about the ice freely.

i. A player who interferes with an opponent will be assessed a minor penalty.
ii. Interference during game action can constitute any of the following:
    1. A skater who hinders an opponent from moving up ice;
    2. A skater who blocks an opponent from moving freely into the attacking zone, especially in the case where he forces the opponent to go around him by sticking out his hip on a shoot-in;
    3. A skater who prevents an opponent from checking a teammate of that skater in possession of the puck or who moves into an opponent's path without first having established body position (i.e., playing a pick);
    4. A skater who blocks an opponent from getting into position to receive a pass;

5. A skater who wins a faceoff but prevents his opponent from advancing to the puck (faceoff interference);
6. A player on either of the players' benches or in the penalty box who, by means of his stick or his body, reaches onto the ice and interferes with the movement of the puck or of an opponent during game action;
7. A skater who moves laterally to impede the progress of an opponent without first having established body position;
8. A player who prevents an opponent from picking up a piece of equipment from the ice (stick, glove, helmet) by pushing it away from the opponent.

iii. Skaters in front of the goal net are given leeway for penalties such as interference, cross-checking, hooking, holding, tripping, and slashing so long as the efforts to establish position in front or to remove that skater from in front do not cross the lines of a fair battle for territory. Violations in this area include: knocking down an opponent who does not have the puck; pulling at an opponent's sweater; placing a stick between an opponent's legs in a "corkscrew" manoeuvre; cross-checking an opponent violently; slashing at the back of an opponent's legs.

iv. Situations which are not classified as interference include:
1. A skater is entitled to the ice he occupies so long as he maintains his skating speed and body position between an opponent and loose puck. If he slows down, he risks interfering with his opponent;
2. A skater is entitled to stand his ground and is not required to move if an opponent wishes to skate through that area of the ice;
3. A skater may block an opponent so long as he is in front of the opponent and moving in the same direction;
4. A skater can use his body position to force an opponent to take a less direct route to the puck, so long as he doesn't use a hand or arm to hold or block the opponent.

v. A player who checks an opponent who is not in possession of the puck will be assessed a minor penalty for interference.

vi. Two skaters who jostle for position as they skate to a loose puck are within their rights to do so, but if one uses his stick, arm, or skate to obstruct his opponent's ability to skate to the puck, he will be assessed a minor penalty for interference.

vii. A player who injures or recklessly endangers an opponent by interference will be assessed either a major penalty and automatic game-misconduct penalty or a match penalty.

RULE 151 – INTERFERENCE ON A GOALTENDER

DEFINITION: A skater who uses any means to prevent a goaltender from playing his position.

i. A skater who, by means of his stick or his body, interferes with or impedes the progress of a goaltender who is in his goal crease, or

who prevents the goaltender from playing his position, will be assessed a minor penalty.

ii. If an attacking skater in possession of the puck, skating forwards or backwards, makes contact with the goaltender in the goal crease, and the puck enters the goal net, the goal will not be allowed and the attacking skater will be assessed at least a minor penalty. This rule also applies to penalty shots and penalty-shot shootouts.

iii. An attacking skater who positions himself facing the opposing goaltender and engages in actions such as waving his arms or stick in front of the goaltender's face for the purpose of distracting the goaltender as opposed to positioning himself to try to make a play, regardless whether the attacking skater is positioned inside or outside of the goal crease, will be assessed a minor penalty.

iv. An opponent who prevents or blocks a goaltender from returning to his goal crease or bumps him unduly while the goaltender plays the puck behind his goal net will be assessed a minor penalty.

v. An attacking skater may skate through the goal crease during game action so long as he doesn't make contact with the goaltender. If he makes contact, or if the goaltender makes contact while backing up in his goal crease, the attacking skater will be assessed a minor penalty.

RULE 152 – KICKING

DEFINITION: A player who generates a swinging motion with his skate directed at any part of an opponent's body.

i. A player who kicks or attempts to kick an opponent will be assessed a match penalty.

RULE 153 – KNEEING

DEFINITION: A skater who extends his knee for the purpose of making contact with an opponent.

i. A skater who uses his knee to make contact with an opponent will be assessed at least a minor penalty.

ii. A skater who injures or recklessly endangers an opponent by kneeing will be assessed a major penalty and automatic game-misconduct penalty or match penalty.

RULE 154 – LEAVING THE PENALTY BOX PREMATURELY

DEFINITION: Only the penalty-box attendant is allowed to open and close the door to the penalty box during a game. A skater is not allowed to leave the penalty box except at the end of a period or after the expiration of his penalty.

i. A penalized skater who leaves the penalty box by his own error prior to the expiration of his penalty will be assessed a minor penalty in addition to having to serve the remainder of his existing penalty.

ii. A skater who leaves the penalty box prematurely because of an error by the penalty-box attendant will not be penalized, but he must return to the penalty box to serve the remaining time of his penalty.
iii. A skater who leaves the penalty box prior to the expiration of his penalty for the purpose of challenging the ruling of an on-ice official will be assessed a minor penalty and game-misconduct penalty.
iv. A skater who leaves the penalty box prior to the expiration of his penalty to either enter into or precipitate a confrontation or fight will be assessed double-minor penalty and automatic game-misconduct penalties (if he is the first to do so) or minor and game-misconduct penalties (if he is a subsequent player).

RULE 155 – PLAYING WITHOUT A HELMET

DEFINITION: A skater who participates in game action without a helmet properly secured to his head.

i. A skater whose helmet comes off during game action and who does not proceed to his players' bench immediately will be assessed a minor penalty.

RULE 156 – PULLING HAIR, HELMET, CAGE

DEFINITION: A player who grabs or holds the cage or helmet or pulls the hair of an opponent.

i. A player who grabs or holds the cage or helmet, or pulls the hair of an opponent, will be assessed either a minor penalty or a major and game-misconduct penalty.

RULE 157 – REFUSING TO START PLAY

DEFINITION: No team is allowed to ignore the referee's call to start play.

i. If both teams are on the ice and one team refuses to play for any reason, the referee will warn the captain of the unwilling team and allow that team not more than 30 seconds to resume play. If the team still refuses to play, the referee will assess a bench-minor penalty.
ii. If there is a recurrence of the same incident, the referee will stop the game, and the incident will be reported to the proper authorities who have the power to forfeit the game to the opponent.
iii. If a team is not on the ice and fails to go on the ice to start playing when ordered to do so by the referee through the captain, manager or coach, the referee will allow to the refusing team two minutes to begin play. If the team resumes play within these two minutes, it will be assessed a bench-minor penalty. If the team refuses to go on the ice, the referee will stop the game, and the incident will be reported by the referee to the proper authorities who have the power to forfeit the game to the opponent.

RULE 158 – ROUGHING

DEFINITION: A player who jostles or strikes an opponent during the game.

i. A player involved in a confrontation with an opponent will be assessed a minor, double minor, or major and automatic game-misconduct penalty.
ii. A player who deliberately knocks the helmet off an opponent's head in order to force him out of play will be assessed a minor penalty.
iii. A player who persists in continuing to be involved in roughing is subject to rules for fighting.
iv. A player who removes his glove(s) to engage in a confrontation with an opponent will be assessed a misconduct penalty.

RULE 159 – SLASHING

DEFINITION: A player who swings his stick, with one hand or two, at any part of an opponent's body or equipment. Contact to the opponent is not necessary for the penalty to be assessed.

i. Tapping the stick of the puck carrier is not considered slashing if it is limited to hitting the stick for the sole purpose of trying to make the opponent lose possession of the puck. Forceful contact, especially if it results in breaking either the opponent's stick or the player's own stick, is considered slashing.
ii. A player who slashes an opponent will be assessed at least a minor penalty.
iii. A player who injures or recklessly endangers an opponent by slashing will be assessed a major penalty and game-misconduct penalty or a match penalty.
iv. A player who swings his stick at another player during a confrontation will be assessed a major penalty and game-misconduct penalty or match penalty.
v. A player who swings wildly at the puck, on ice or in the air, with the object of intimidating an opponent will be assessed at least a minor penalty.
vi. A player who lifts his stick between an opponent's legs for the purpose of making contact with the groin will be assessed either a major penalty and game-misconduct penalty or a match penalty.

RULE 160 – SLEW-FOOTING

DEFINITION: A player who dangerously kicks an opponent's foot or skate from behind or who pulls an opponent backwards while at the same time knocking or kicking his feet from under him.

i. A player who slew-foots an opponent will be assessed a match penalty.

RULE 161 – SPEARING

DEFINITION: A player who stabs an opponent or attempts to stab an opponent with the end of the stick blade, whether or not the stick is being carried with one or both hands. Contact to the opponent is not necessary for the penalty to be assessed.

i. A player who attempts to spear an opponent will be assessed a double minor and misconduct penalty.
ii. A player who spears an opponent will be assessed a major penalty and automatic game-misconduct penalty or match penalty.
iii. A player who injures or recklessly endangers an opponent by spearing will be assessed a match penalty.

RULE 162 – SPITTING

DEFINITION: A player who spits on or at an opponent, spectator, or anyone in the rink during a game.

i. A player or team official who spits on or at an opponent or anyone in the rink during a game will be assessed a match penalty.
ii. A bleeding player who intentionally wipes blood from his body onto an opponent or anyone in the rink will be assessed a match penalty for spitting.

RULE 163 – TAUNTING

DEFINITION: A skater who celebrates a goal or taunts the opposition while skating past the opposing players' bench with celebratory, derisive, or mocking gestures or provocative words intended to taunt or incite his opponents.

i. Excessive celebrations or taunting of opponents on their players' bench in any manner will result in a misconduct penalty.

RULE 164 – TEAM OFFICIAL ENTERING THE PLAYING AREA

DEFINITION: It is forbidden for a team official to step onto the ice during a game without consent from an on-ice official.

i. Where an injury has occurred to a player and there is a stoppage of play, a team doctor (or other medical personnel) may go onto the ice to attend to the injured player without waiting for the referee's consent.
ii. A team official who steps onto the ice any time between the start of a period and its conclusion (excepting Rule 164-i) will be assessed a game-misconduct penalty.

RULE 165 – THROWING A STICK OR OBJECT

DEFINITION: A player or team official who throws a stick or any other object within or without the playing area.

i. A player who throws a stick or part of it or any other object out of the playing area will be assessed a game-misconduct penalty.
ii. A player can slide or direct any stick or any part of it, or any object, away from his immediate area on ice so long as his actions do not interfere with an opponent. However, a player on the ice who throws or directs a stick or any part of it, or any other object, at the puck or puck carrier in the neutral or attacking zone, will be assessed a minor penalty.
iii. A player or team official on the players' bench or penalty box who throws or directs a stick or any part of it, or any other object, at the puck or puck carrier in the neutral or attacking zone, will be assessed a minor penalty or bench-minor penalty.
iv. If a player or team official commits any of these actions in Rule 165-ii or 165-iii in his defending zone, the referee will award the opponent's team a penalty shot.
v. The position of the puck or puck carrier at the moment when the throwing occurs is the determining factor to assess a minor penalty or bench-minor penalty or a penalty shot.
vi. When a player or team official throws a stick or any part of it or any other object at an attacking skater who is on a breakaway, the referee will award a penalty shot to the skater.
vii. If a goaltender has been substituted for an extra skater, leaving his team's goal net empty, and a teammate or team official throws a stick or any part of it or any other object at the puck or puck carrier in the neutral zone or the defending zone with the empty net, thereby preventing the puck carrier from having a clear shot, a goal will be awarded to the attacking team. The goaltender is considered off ice once his replacement has one skate on the ice.

RULE 166 – TOO MANY MEN

DEFINITION: A team is allowed a maximum of one goaltender and five skaters or six skaters on the ice. However, a bench-minor penalty for too many men can be incurred any time a team has one or more skaters on the ice than it is allowed.

i. "On the ice" means that both skates must be on the ice. If a player has one skate on the ice and one over the boards or off the ice, at his players' bench or the penalty box, he is considered off the ice. However, if he is off the ice under this definition, he is not allowed to play the puck, make contact with an opponent, or participate in game action in any way.
ii. A player coming onto the ice must wait until the departing player is within 1.5 metres (5') of his respective players' bench.
iii. Player changes during game action and during stoppages must take place only at the players' bench. Changing on-ice manpower using any other entrance or exit is illegal and will result in a bench-minor penalty for too many men.

iv. A team which has on the ice more than the number of players to which it is entitled during game action will be assessed a bench-minor penalty for too many men.
v. If, during a player change during game action, a player coming onto the ice or coming off the ice plays the puck, makes contact with an opponent, or participates in game action while both the departing and entering players are on the ice within the 1.5 metre (5') zone, a bench-minor a penalty for too many men will be assessed.
vi. If player changes are made during game action and (1) the changing players are within 1.5 metres (5') of the boards across the width of his respective players' bench and (2) the changing players are not involved in game action in any way, no penalty for too many men will be assessed.
vii. A bench-minor penalty for too many men must be served by a skater on the ice at the time of the whistle to assess the penalty.

RULE 167 – TRIPPING

DEFINITION: A player who knocks an opponent to the ice using his stick, foot, or leg.

i. A player who trips an opponent by any means will be assessed at least a minor penalty.
ii. If a player chases an opponent who is in possession of the puck and lunges along the ice, knocking the puck away with his stick and subsequently causing that player to fall, no penalty will be assessed.
iii. A player in Rule 167-ii who fails to make contact first with the puck, and causes the opponent to fall, will be assessed a minor penalty for tripping.
iv. A player who injures or recklessly endangers an opponent by tripping will be assessed a major penalty and game-misconduct penalty or match penalty.

RULE 168 – UNSPORTSMANLIKE CONDUCT

DEFINITION: A player or team official who commits a violation of the rules pertaining to sportsmanship, fair play, and respect.

i. Minor Penalty
    1. An identifiable player who commits a violation of the rules of sportsmanship, fair play, and respect will be assessed a minor penalty.
    2. An identifiable player who uses obscene, profane, or abusive language directed to any person on the ice or anywhere in the rink will be assessed a minor penalty.
    3. An identifiable player who celebrates with or congratulates a teammate after an injury to an opponent will be assessed a minor penalty.

4. An attacking skater who sprays a goaltender who freezes the puck for a whistle will be assessed a minor penalty.

ii. Bench-Minor Penalty

1. A bench-minor penalty will be assessed if an unidentifiable player or team official commits a violation of the rules of sportsmanship, fair play, and respect.
2. A bench-minor penalty will be assessed if an unidentifiable player or team official celebrates with or congratulates a teammate after an injury to an opponent.
3. A bench-minor penalty will be assessed if an unidentifiable player or any team official uses obscene, profane, or abusive language directed to any person on the ice or anywhere in the rink.
4. A bench-minor penalty will be assessed if an unidentified player or team official who is off the ice throws a stick or any other object onto the ice.

iii. Misconduct Penalty

1. A player who shoots the puck after a whistle or end of a period will be assessed a misconduct penalty.
2. If a violation is flagrant or if a player continues his unsportsmanlike conduct, he may be assessed a misconduct penalty.
3. A player who persists in using obscene, profane, or abusive language directed to any person on the ice or anywhere in the rink for which he has already been assessed a minor penalty will be assessed a further misconduct penalty.
4. A penalized player who fails to go directly and immediately to the penalty box following a fight or player confrontation will be assessed a misconduct penalty.
5. A player who persists in inciting an opponent into taking a penalty will be assessed a misconduct penalty.
6. A player who enters the opponent's players' bench for any reason other than accidental will be assessed a misconduct penalty in addition to any other penalties he may incur during such an incident.

iv. Game-Misconduct Penalty

1. A team official who persists in any action for which he has been assessed a bench minor penalty will be assessed a game-misconduct penalty.
2. A player or team official who uses obscene, profane, or abusive language directed to any person on the ice or anywhere in the rink for which he has already been assessed a minor or bench-minor penalty will be assessed a game-misconduct penalty. When this type of conduct occurs after expiration of the game, on or off the ice, the game-misconduct penalty can be applied without the necessity of having previously assessed a minor or bench-minor penalty.

v. Minor (Bench Minor) and Game-Misconduct Penalties

1. An identifiable player (or team official) who is off the ice and throws a stick or any other object onto the ice will be assessed minor (or bench minor) and game-misconduct penalties.

vi. Match Penalty
   1. A player or team official who threatens, makes racial or ethnic slurs, spits, smears blood, or makes sexual remarks to any person will be assessed a match penalty.
   2. A player or team official who makes any obscene gesture to any person on the ice or anywhere in the rink before, during, or after the game will be assessed a match penalty.
   3. A player who swings his stick at a spectator or anyone other than an opponent will be assessed a match penalty.

RULE 169 – ILLEGAL HIT (WOMEN)

DEFINITION – In women's hockey, a player is not allowed to deliver a bodycheck to an opponent.

i. An illegal hit in women's hockey refers to bodychecking an opponent.
ii. A player who bodychecks an opponent will be assessed one of: (1) a minor penalty; (2) a major penalty and automatic game-misconduct penalty; (3) a match penalty.
iii. A player who injures or recklessly endangers an opponent by body-checking will be assessed either a major penalty and automatic game-misconduct penalty or a match penalty.
iv. If two players are in pursuit of the puck, they are reasonably allowed to push and lean into each other provided that possession of the puck remains the sole object of the two players.
v. If two or more players are fighting for possession of the puck, they are not allowed to use the boards to make contact with an opponent to eliminate her from the play, push her into the boards, or pin her along the boards. All of these actions indicate an absence of interest in gaining possession of the puck.
vi. A player who is stationary is entitled to that area of the ice. It is up to the opponent to avoid body contact with such a player. If that player is stationed between the opponent and the puck, the opponent is obliged to skate around the stationary player.
vii. If a player with the puck is skating directly at an opponent who is stationary, it is the obligation of the puck carrier to avoid contact. But, if the puck carrier makes every effort to avoid contact and the opponent moves into the puck carrier, that opponent will be assessed a minor penalty for bodychecking.

SECTION 11 – PENALTY SHOTS AND AWARDED GOALS

OVERVIEW – In situations where a member of the defending team uses illegal means to deny an opponent a reasonable scoring chance, with the goaltender on the ice, the referee has the option to award the opponent a penalty shot. In situations where a member of the defending team uses illegal means to deny an opponent a reasonable scoring chance, with the goaltender off the ice, the referee has the option to award the opponent a goal.

The intention of these rules is to restore a reasonable scoring opportunity which was mitigated by a foul from behind by an opponent or by a clear breach of rules which would otherwise have resulted in a reasonable scoring opportunity or a goal.

RULE 170 – PENALTY SHOTS AND PENALTY-SHOT SHOOTOUT AS PART OF THE GAME

i. The taking of a penalty shot and the game action of the penalty-shot shootout are considered part of the game. Any penalty that might normally be assessed to players during game action are equally applicable during a penalty shot or a penalty-shot shootout.

RULE 171 – AWARDING A PENALTY SHOT/BREAKAWAY

i. If an attacking skater is on a breakaway and is fouled by an opponent from behind, or by the opposing goaltender, the skater will be awarded a penalty shot.
ii. If the skater loses control or possession of the puck after being fouled, the referee will stop game action and award a penalty shot.
iii. If the skater is fouled but still manages to maintain possession of the puck, the referee will delay the penalty call and allow the skater to complete his action.
iv. If the fouled skater manages to score, the penalty shot will be cancelled. If the penalty being assessed was a minor penalty, it will also be cancelled by the goal, but if the penalty being assessed was a misconduct, major and automatic game misconduct, or match penalty, these will still be assessed.
v. If the referee signals a penalty shot, and before the play is whistled because of a goal or to call the penalty shot another foul is assessed to the same team, the additional penalty will be assessed regardless if the skater scores on either the play or the subsequent penalty shot.
vi. If a foul occurs near the end of any period (regulation or overtime) and time expires on the scoreclock before the referee can award the penalty shot, the shot will still be taken.

RULE 172 – AWARDING A PENALTY SHOT/INTERFERENCE OR THROWING OBJECTS

i. If a player or team official shoots or directs a discarded or broken stick or other piece of equipment or object at the puck or puck carrier while play is in the defending zone of the player committing the foul, the referee will award a penalty shot.

ii. If a player or any team official illegally enters the game from the players' bench or any other part of the arena and interferes with an attacking skater who is on a breakaway, the referee will award the opposing team a penalty shot.

iii. If a player or team official throws or shoots a stick or any part of it or any object, or who directs (with any part of his body) a stick or part of it or any object, in the direction of the puck or puck carrier who is on a breakaway, the referee will award the opposing team a penalty shot.

iv. If a player on the ice throws or directs a stick or any part of it or any object at the puck or puck carrier in his defending zone, the referee will award the opposing team a penalty shot.

v. If a player or team official on the players' bench or in the penalty box throws or directs a stick or any part of it or any object at the puck or puck carrier in his defending zone, the referee will award the opposing team a penalty shot.

RULE 173 – AWARDING A PENALTY SHOT/LAST TWO MINUTES OF REGULATION/OVERTIME

i. If a player deliberately displaces his goal frame from its normal position during the last two minutes of regulation time or at any time in overtime, the referee will award the opposing team a penalty shot.

ii. If in the last two minutes of regulation time or at any time in overtime, a team makes a deliberate illegal substitution to create a too-many-men situation, a penalty shot will be awarded to the opposition.

iii. Deliberate illegal substitution occurs when a team intentionally sends extra skaters onto the ice during game action for the purpose of gaining an advantage, causing a stoppage in play, or preventing a goal.

iv. Incorrect substitution during game action will not be considered deliberate illegal substitution, the offending team will be assessed a bench-minor penalty unless this becomes a tactic as in Rule 173-iii.

v. If a captain of a team that is two men short in the last two minutes of regulation time or at any time in overtime requests an equipment measurement that is not upheld, the referee will award a penalty shot against the team requesting the measurement.

RULE 174 – AWARDING A PENALTY SHOT/PLAYER DISPLACING GOAL NET

i. If a player deliberately displaces his goal frame from its normal position when an attacking skater is on a breakaway, the referee will award the opposing team a penalty shot.

RULE 175 – AWARDING A PENALTY SHOT/SKATER FALLING ON PUCK

i. If a skater falls on, holds, gathers the puck into his body, picks up the puck with his hands, or conceals the puck with his hands from the ice in the defending zone goal crease, the referee will award the opposing team a penalty shot.

RULE 176 – PENALTY-SHOT PROCEDURE/OVERVIEW

i. In cases where a skater is fouled in a manner that warrants a penalty shot, the skater fouled must take the penalty shot. If he is injured and unable to take the shot, any non-penalized skater who was on the ice at the time of the infraction may take it.
ii. For the purposes of the penalty-shot procedure, "injured" means that a team doctor must confirm with the referee that the skater is physically unable to take the penalty shot. If, in the opinion of the referee, the skater is faking an injury, subsequent punishment may be meted out by the proper authorities against the skater and/or coach.
iii. In cases where the skater fouled is not identifiable, the coach of the team taking the penalty shot can designate any skater who was on the ice at the time of the infraction to take the shot so long as that skater was not about to be penalized.
iv. If a penalty shot is awarded for a reason other than a foul against a specific skater, the coach of the team taking the penalty shot may designate any skater on the ice at the time of the infraction to take the shot so long as that skater was not about to be penalized.
v. The coach of the defending team is allowed to change goaltenders prior to a penalty shot, but the incoming goaltender is not allowed a warmup of any kind.
vi. Should two penalty shots be awarded to the same team at the same stoppage of play (for two separate fouls), only one goal can be scored. Should the first penalty shot result in a goal, the second penalty shot is automatically cancelled, but the appropriate penalty is assessed for the second infraction. If the first shot is unsuccessful, the second shot is taken. The order of the penalty shots will be decided by the order of the infractions during game action.
vii. Only a goaltender or backup goaltender is allowed to be the goaltender during a penalty shot or penalty-shot shootout.
viii. A skater is only allowed to be the goaltender during a penalty shot or penalty-shot shootout if both the starting goaltender and the backup

goaltender are injured or serving penalties which have removed them from the game.

RULE 177 – PENALTY-SHOT PROCEDURE/TAKING THE SHOT

i. The players of both teams must skate to their respective benches and leave the ice surface entirely, remaining there during the taking of the penalty-shot. Only the two opposing goaltenders defending the shots, the skater taking the shot, and the on-ice officials are allowed to be on the ice.

ii. The referee places the puck on the centre-ice faceoff spot.

iii. The skater taking the shot must be on his own side of centre ice prior to the start of the penalty shot.

iv. The goaltender must stay in his goal crease until the skater has touched the puck at centre ice. If the goaltender comes out of his goal crease before that instance, the referee will raise his arm and allow the shot to be taken. If the skater scores, the goal will stand. If he does not score, he will be allowed to re-take the penalty shot, and the goaltender will be issued a warning. If the goaltender leaves his goal crease a subsequent time against this skater on this shot, he will be assessed a misconduct penalty and a player designated by the coach through the captain must go to the penalty box. If he does not score, the player will be allowed to re-take the shot. For a third violation, a goal will be awarded to the skater taking the penalty shot.

v. If a goaltender commits a foul against a skater during a penalty shot and no goal is scored, the goaltender will be assessed the relevant penalty and a player designated by the coach through the captain must go to the penalty box. The shooter will be allowed to re-take the shot. If a goaltender commits a foul for a second time against this skater on this shot, and no goal is scored, the referee will assess a misconduct penalty to the goaltender and another skater designated by the coach through the captain must go to the penalty box. The shooter will re-take the shot. For a third violation against this skater on this shot, if no goal is scored, a goal will be awarded.

vi. The penalty shot officially begins when the referee blows his whistle for the skater to start the shot. The skater must, within a reasonable time of hearing the referee's whistle, play the puck and proceed towards his opponent's goal line in continuous motion and attempt to score.

vii. If the skater misses the puck and does not touch the puck on his way past it as it sits on the centre-ice faceoff spot, he can return and continue with the penalty shot. As soon as the skater touches the puck in any manner, the penalty shot can be said to have started.

viii. Once the puck has left the skater's stick and the shooting motion or attempt has been completed, the penalty shot is considered over. No goal can be scored by a second shot of any kind.

ix. The skater is allowed to use the full width of the ice so long as he demonstrates continuous forward movement of the puck towards the goal net.

x. The penalty shot is considered complete once:
   1. The puck leaves the skater's stick as a result of shooting;
   2. The goaltender has made a save;
   3. The skater has not kept the puck in continuous forward movement;
   4. The puck touches the boards anywhere between the centre red line and icing line and does not go directly into the goal net;
   5. The puck advances past the icing line for any reason or in any way;
   6. A goal is scored.

xi. If a skater mishandles the puck or falls, but the puck continues in a forward motion, he may catch up to it, regain possession, and continue his shot in the normal manner.

xii. If a goal is scored on a penalty shot, the ensuing faceoff will take place at centre ice. If no goal is scored, the ensuing faceoff will take place at the nearest end zone faceoff spot to where the penalty shot was attempted.

RULE 178 – PENALTY-SHOT PROCEDURE/SPECIFIC SITUATIONS

i. If a player from the opposing team interferes with or distracts a skater taking the penalty shot, and because of such action the shot fails, the referee will allow the skater to re-take the penalty shot and assess a misconduct penalty to the offending player.

ii. If a team official from the players' bench of the defending team interferes with or distracts a skater taking the penalty shot, and because of such action the shot fails, the referee will allow the skater to re-take the penalty shot and assess a game-misconduct penalty to the offending official.

iii. The 'spin-o-rama' move in which a skater makes a 360-degree turn as he approaches the goal net is not allowed.

iv. The 'lacrosse-like' manoeuvre in which a skater flips the puck onto the blade of his stick and skates with it in this fashion is not allowed.

v. When a skater and goaltender have been selected by their respective coaches to take a shot and defend the goal net against this shot, neither can be changed if the shot must be re-taken due to a violation of rules or a foul committed by the goaltender unless one or both sustained an injury. In this case, the coach may designate another skater to take the shot or the backup goaltender to defend the goal net.

vi. During the course of a penalty shot or penalty-shot shootout, when the puck enters the goal net and the goal frame comes off its moorings or is not in the correct position as a result of the goaltender's action or of the goaltender "trying to make the save," the goal will be allowed without video-goal judge review.

vii. During the course of a penalty shot or penalty-shot shootout, if the goal net comes off its moorings or is not in the correct position as a result of the goaltender's action or the goaltender "trying to make the save," and the puck does not go into the goal net, no goal will be awarded.

viii. Any methods used by the skater taking a penalty shot or penalty-shot shootout in order to distract the goaltender will result in the shot being considered complete, and no goal will be awarded.
ix. If a spectator interferes with the penalty shot so that either the skater is unable to take his shot properly or the goaltender is unable to play his position properly, the referee will rule the shot to be re-taken.
x. If a penalty-shot goal is scored during a power-play situation, the penalized skater will not be allowed to return to the ice.
xi. The penalty shot will be taken with the scoreclock frozen at the time of the whistle. It does not run during the penalty-shot process.

RULE 179 – AWARDED GOALS

i. For the referee to award a goal to a team without the puck going into the goal net, the defending goaltender must have been removed from the ice for an extra skater prior to the infraction.
ii. A goal will be awarded if a goaltender has been removed from the ice and the puck is in the three-dimensional space of the goal crease and a skater from his team deliberately:
    1. Falls on, holds, or gathers the puck into his body;
    2. Picks up the puck with his hands;
    3. Covers his hand on the puck.
iii. A goal will be awarded if a goaltender has been removed from the ice and an attacking skater who is on a breakaway is fouled from behind to prevent a clear opportunity to score.
iv. A goal will be awarded if a goaltender has been removed from the ice and a skater of his team displaces the goal frame from its normal position when an attacking skater is on a breakaway.
v. A goal will be awarded if a goaltender has been removed from the ice and a player or any team official from his team illegally enters the game from the players' bench or any other part of the arena and interferes with an attacking skater on a breakaway
vi. A goal will be awarded if a goaltender has been removed from the ice and a player or team official from the players' bench or penalty box, by means of his stick or any other object or any part of his body, interferes with the movement of the puck outside the opponent's defending zone blue line.

RULE 180 – AWARDED GOALS/BLOCKING THE GOAL NET

i. If a player leaves any object in front of his goal net and the puck hits such objects, preventing the puck from entering the goal net while the goaltender is off the ice having been substituted, a goal will be awarded.
ii. If a goaltender leaves his stick or other equipment or piles snow or other objects in front of his goal net prior to coming off the ice to be substituted by a skater, and any of such obstacles prevent the puck from entering the goal net, a goal will be awarded.

SECTION 12 – RULES SPECIFIC TO GOALTENDERS

OVERVIEW – This section includes all rules and regulations which pertain to goaltenders. Any reference to "goaltender" refers equally to "backup goaltender".

RULE 181 – GOALTENDER WARMUP

i. Once the puck has been faced off to start a game, any goaltender subsequently entering the game is not allowed a warmup at any time (see Rule 202-vii for exception).

ii. "Goaltender" refers to the starting goaltender re-entering the game at any point, the backup goaltender, a third goaltender, or a skater who is forced to dress and play the position of goaltender.

RULE 182 – GOALTENDER AS CAPTAIN OR ALTERNATE CAPTAIN

i. A goaltender cannot be captain or alternate captain for his team during a game.

RULE 183 – PROTECTION OF GOALTENDER

i. At no time is contact initiated by a skater with an opposing goaltender acceptable. As a result, the goaltender can never be reasonably responsible for expecting a bodycheck. Contact, whether incidental or otherwise, may be with a stick or any part of the body.

ii. A penalty will be assessed in every case where a skater makes unnecessary contact with an opposing goaltender. Incidental contact is allowed when the goaltender is in the act of playing the puck outside his goal crease, provided the attacking skater makes a reasonable effort to minimize or avoid such contact.

iii. If an attacking skater is pushed, shoved, or fouled by an opponent so as to cause him to come into contact with the goaltender, such contact is not deemed to be contact initiated by the attacking skater, provided the attacking skater has made a reasonable effort to avoid the contact.

iv. An attacking skater is not allowed to jab, poke, or slash the goaltender's glove whether it is on the ice or in the air after the goaltender has made a save.

v. An attacking skater is not allowed to knock the goaltender's stick out of his hand by any means.

vi. A goaltender outside of his goal crease is not allowed to interfere with an attacking skater who is attempting to play the puck or to check an opponent.

RULE 184 – GOALTENDER AND GOAL CREASE

OVERVIEW – The goaltender's ability to play his position is based on his ability to move freely in his goal crease. Although an attacking skater is allowed to skate through the goal crease, he runs the risk of incurring a penalty or nullifying a goal by doing so. Furthermore, any contact the attacking skater initiates with a goaltender, either directly or by pushing an opponent into the goaltender, also runs the risk of incurring a penalty or nullifying a goal.

i. If an attacking skater establishes position in the goal crease, play will be stopped and the ensuing faceoff will take place at the nearest faceoff spot in the neutral zone.
ii. An attacking skater who commits a foul on a goaltender, regardless of the goaltender's ability to play his position or where the puck is being played, will be assessed at least a minor penalty.
iii. If a goaltender is outside his goal crease and an attacking skater prevents the goaltender from returning to his crease or prevents the goaltender from playing his position properly while a goal is scored, the goal will not be allowed, and the attacking skater will be assessed a minor penalty for interference.
iv. If an attacking skater is in the goal crease and visually obstructs the goaltender's ability to play his position when the puck enters the net, no goal will be allowed and no penalty will be assessed.

RULE 185 – GOALTENDER AND GOAL CREASE/GOAL ALLOWED

i. If an attacking skater is in the goal crease at the moment the puck crosses the plane of the goal line and in no way affects the goaltender's ability to make a save or play his position properly, the goal will be allowed.
ii. If a skater of the attacking team is pushed, shoved, or fouled by a defending skater to cause him to be in the goal crease when the puck enters the goal net, the goal will be allowed unless the attacking skater had sufficient time to get out of the goal crease.
iii. An attacking skater who makes incidental contact with a goaltender out of his goal crease while both try to gain possession of the puck will not be penalized. If a goal is scored at this time, the goal will be allowed.
iv. If an attacking skater establishes position outside the goal crease but in front of the goaltender, obscuring the goaltender's sightline but making no contact, and a goal is scored, it will be allowed (unless there is a violation of Rule 151-iii).

RULE 186 – GOALTENDER AND GOAL CREASE/GOAL DISALLOWED

i. If an attacking skater makes contact with a goaltender in the goal crease during game action, he will be assessed a minor penalty for interference. If a goal is scored at this time, it will not be allowed.

ii. An attacking skater who makes intentional contact with a goaltender during game action will be assessed a minor penalty for interference. If a goal is scored at this time, it will not be allowed.
iii. If an attacking skater pushes an opponent in any way during game action which causes that opponent to make contact with his own goaltender, and a goal is scored at this time, it will not be allowed.
iv. If an attacking skater establishes position inside the goal crease, obscuring the goaltender's sightline but making no contact, and a goal is scored, it will not be allowed.
v. An attacking skater who makes contact other than incidental with a goaltender who is out of his goal crease during game action will be assessed a minor penalty for interference. If a goal is scored at this time, it will not be allowed.

RULE 187 – GOALTENDER EQUIPMENT/GENERAL

Measurements and dimensions of all goaltender equipment are specified under separate document.

i. All protective equipment must be worn entirely under the uniform except gloves, facemask, and goaltender's pads.
ii. The measurement of goaltender's equipment, with the exception of the stick, may be requested only immediately after the end of the first or second period.
iii. With the exception of skates and stick, equipment worn by the goaltender must be constructed solely for the purpose of protecting the head and body and must not include any garment or addition which gives the goaltender undue assistance in tending goal or "making himself bigger".
iv. Abdominal aprons, extending down the front of the thighs on the outside of the pants, are prohibited.
v. Graffiti-type designs, patterns, artwork, drawings, or slogans which are abusive or obscene and refer to culture, race, or religion are not allowed on any equipment.
vi. The referee can request that a goaltender remove any personal accessories should the accessories be regarded as dangerous. If these personal accessories are difficult to remove, the goaltender should tape them or put them safely under his game sweater in such way that they are no longer dangerous. In this case, the goaltender will be required to leave the ice during this process, and a warning will be issued to his team.
vii. For a second violation of Rule 187-vi, the referee will assess a misconduct penalty to the offending goaltender.

RULE 188 – BLOCKING GLOVE/GOALTENDER

i. The blocking glove must be rectangular.
ii. The flap protecting the thumb and wrist must be fastened to the blocker and follow the contour of the thumb and wrist.
iii. Raised ridges are not allowed on any portion of the blocking glove.

RULE 189 – CHEST AND ARM PROTECTION/GOALTENDER

i. No raised ridges are allowed on the front edges or sides of the chest pad, the inside or outside of the arms, or across the shoulders.
ii. Layering at the elbow is allowed to add protection but not to add stopping area.
iii. Shoulder cap protectors must follow the contour of the shoulder cap without becoming a projection or extension beyond or above the shoulder or shoulder cap.
iv. On each side, the shoulder clavicle protectors are not to extend or project above or beyond the shoulder or shoulder cap or extend beyond the armpit. No insert is allowed between the shoulder clavicle protector and the chest pad that might elevate the shoulder clavicle protector.
v. If, when the goaltender assumes the normal crouch position, the shoulder or shoulder cap protection is pushed above the contour of the shoulder, the chest pad will be considered illegal.

RULE 190 – FACEMASK/GOALTENDER

i. Goaltenders must wear a facemask at all times during game action. The facemask must be constructed in such a way that a puck cannot enter through the openings.
ii. All goaltenders in the age category Under-18 must wear a facemask constructed in such a way that neither a puck nor a stick blade can enter through the openings.
iii. A goaltender is allowed to wear a facemask of a different colour and design than that of his teammates.
iv. The backup goaltender is not required to wear his helmet and facemask when he crosses the ice to return to his players' bench after intermission.

RULE 191 – KNEE PROTECTION/GOALTENDER

i. Knee protection must be strapped and must fit under the thigh pad of the pants.
ii. Flaps attached to the inside of the goaltender's pads above the knee that are not worn under the thigh pad of the pants are not allowed.
iii. The knee strap pad is the pad that separates the inside of the knee from the ice.

iv. The knee protection must be worn with the strap tight so that it does not obscure any portion of the “five hole”. The padding between the knee strap pad and the inner knee channel is not affected by this measurement standard.
v. Medial rolls (raised seam ridges) are not allowed.

RULE 192 – NECK AND THROAT PROTECTOR/GOALTENDER

i. All goaltenders 18 years and younger must wear a neck and throat protector regardless what event or tournament they are playing in.

RULE 193 – PADS/GOALTENDER

i. A piece of any material covering the space between the ice and the bottom of the goaltender pads in front of the skates is not allowed.
ii. Graffiti-type designs, patterns, artwork, drawings, or slogans which are abusive or obscene and refer to culture, race, or religion are not allowed. The pads, however, can be of any non-fluorescent colours.
iii. No attachments such as plastic puck foils are allowed to any part of the pads.

RULE 194 – PANTS/GOALTENDER

i. Goaltender pants are produced by an IIHF supplier to specific IIHF guidelines. These may not be altered in any way without consent from an IIHF representative.
ii. No internal or external padding is allowed on the pants leg or waist to provide protection (i.e., no ridges, inside or out).
iii. If the goaltender is wearing his pants shells loosely, allowing him to close the open space between his legs above his pads when he is in the crouch position, the shells will be considered illegal.
iv. Thigh protectors inside the pants must follow the contour of the leg. Square thigh protectors are considered illegal.

RULE 195 – SKATES/GOALTENDER

i. A goaltender’s skates must have a non-fluorescent protective cowling at the front of each boot.
ii. The skate blade must be flat and cannot be longer than the boot.
iii. Any blades, projections, or “cheaters” added to the boot in order to give the goaltender additional contact to the ice surface are prohibited.

RULE 196 – STICK/GOALTENDER

i. A goaltender’s stick must be made of wood or other material approved by the IIHF. It must not have any projections, and all edges must be bevelled.

ii. The shaft, from the butt end to the blade, must be straight.
iii. The butt end of a goaltender's stick must have a form of protection. If the cap at the top of a metal stick has been removed or falls off, the stick will be considered dangerous equipment.
iv. It is forbidden to insert any material into the hollow shaft of the stick to alter its weight, substance, or purpose.
v. Adhesive, non-fluorescent tape of any colour may be wrapped around the stick at any place. Fluorescent-painted sticks are not allowed.
vi. The maximum length of the shaft of a goaltender's stick is 163 cm (64") from the top of the shaft to the heel; the maximum width is 3 cm (1 3/16"); the maximum thickness is 2.54 cm (1").
vii. The shaft consists of two parts. The lower section (shank) down to the heel must not be more than 71 cm (30") long and not more than 9 cm (3 ½") wide. Both parts of the shaft must be straight.
viii. The maximum length of the blade is 39 cm (15 3/8") along the bottom, from the heel to the toe. The maximum height is 9 cm (3 ½") except the heel which can be 11.5 cm (4 ½"). The maximum curvature of the blade is 1.5 cm (5/8").

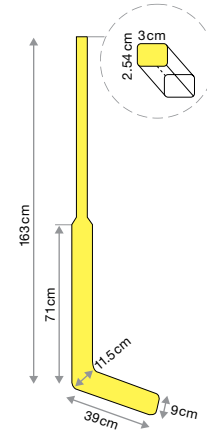

RULE 197 – SWEATERS/GOALTENDER

i. Goaltender sweaters are produced by an IIHF supplier to specific IIHF guidelines. These cannot be altered in any way without consent from an IIHF representative.
ii. No "tying down" of the sweater is allowed at the wrists if this creates a tension across the sweater such that a webbing effect occurs in the armpit.
iii. No other tie-downs or additions are allowed anywhere on the sweater to create a webbing effect.
iv. A sweater is illegal if its length is such that it covers any area between the goaltender's legs.
v. The sleeves must not extend past the fingers of the catching and blocking gloves.

RULE 198 – THROAT PROTECTOR/GOALTENDER

i. A goaltender is allowed to attach a throat protector to the chin of his facemask. It must be made of a material that will not cause injury.

RULE 199 – UNIFORMS/GOALTENDER

i. A goaltender is allowed to wear a facemask of a different colour and design than that of his teammates
ii. A goaltender is allowed to use skates and gloves of a different colour than that of his teammates.

RULE 200 – GAME ACTION/GOALTENDER

i. If a goaltender is hit in the facemask by a shot during game action, the referee may stop play if there is no immediate scoring chance.
ii. If a goaltender's facemask comes off during game action with his team in possession of the puck, the referee will stop play immediately. The ensuing faceoff will take place at the nearest faceoff spot to where the puck was situated when game action was stopped.
iii. If a goaltender's facemask comes off during game action with the opposing team in possession of the puck, the referee will stop play if there is no immediate scoring chance. The ensuing faceoff will take place at one of the defending team's faceoff spots.
iv. If a goaltender's facemask comes off during game action and the puck enters the goal net before the referee blows his whistle to stop game action, the goal will be allowed.
v. If the puck hits a goaltender's facemask and goes into the goal net, the goal will be allowed.

RULE 201 – THROWING THE PUCK FORWARD/GOALTENDER

i. If a goaltender has the puck in either glove and places it on the ice in front of him and propels the puck forward with his stick, skate, or any other part of his body or equipment, no penalty will be assessed.
ii. If a goaltender throws the puck forward and the puck is first played by a teammate, the referee will stop play, and the ensuing faceoff will take place at an end zone faceoff spot nearest to where the throwing occurred.
iii. If a goaltender throws the puck forward and the puck is first played by an opponent, game action will be allowed to continue.

RULE 202 – GOALTENDER SUBSTITUTIONS

i. If a goaltender skates to his players' bench during a stoppage in play for any reason, he must be substituted unless the stoppage is for a team or television timeout. He cannot delay the start of game action to adjust, fix, or replace equipment.
ii. If he has a broken stick or wishes to replace his stick for any reason, he must stay in the goal crease and ask a teammate to make the change.
iii. When a goaltender substitution is made during a stoppage of play or a timeout, the goaltender who left the game cannot re-enter the game until play has resumed.

iv. The goaltender on ice and substitute goaltender are allowed to change during game action just as skaters do, but they are subject to the same rules for “changing on the fly”.
v. No warmup is ever allowed for a substitute or incoming goaltender (see Rule 202-vii for exception).
vi. If a goaltender sustains an injury or becomes ill, he must be ready to play immediately after receiving quick medical attention on ice. If the injury causes undue delay, the injured goaltender must leave the game and be replaced, although he may subsequently return at any time.
vii. If, during the course of a game, both goaltenders of a team are unable to play, the team will be allowed to dress a skater from the players’ bench to play as a goaltender. He has ten minutes in which to dress and be ready to play, but if he is ready prior to ten minutes he is allowed to use the remaining time for warmup on ice.
viii. If the situation in Rule 202-vii occurs, neither of the two regular goaltenders is allowed to return to the game.
ix. In IIHF competitions where three goaltenders are registered and one of the two goaltenders on the game sheet is incapacitated, the applicable IIHF By-Law applies.

RULE 203 – ILLEGAL SUBSTITUTION/GOALTENDER

DEFINITION: A skater coming onto the ice to replace a goaltender must wait until the goaltender is within 1.5 metres (5') of his players’ bench.

i. If a goaltender proceeds to his players’ bench for the purpose of being substituted for an extra skater, but the substitution is made prematurely, the referee will stop play when the offending team gains possession of the puck.
ii. When play is stopped in the attacking half of the ice, the ensuing faceoff will take place at the centre-ice faceoff spot.
iii. When play is stopped in the defending half of the ice, the ensuing faceoff will take place at the nearest faceoff spot in the zone where play was stopped which provides the offending team no territorial advantage.

RULE 204 – FACEOFFS/GOALTENDER

i. A goaltender cannot participate in a faceoff.

RULE 205 – ICING AND THE GOALTENDER

i. If a goaltender leaves his goal crease or is situated outside his goal crease when icing is signalled, and he makes a move in the direction of the puck, the icing call will be cancelled even if he returns to his crease.
ii. If a goaltender is outside his goal crease when the puck is shot down the ice and icing is signalled, icing will be in effect if he moves back into his goal crease immediately.

iii. If a goaltender is outside his goal crease when the puck is shot down the ice and icing is signalled, no icing will be called if he makes no attempt to move back into his goal crease immediately.
iv. If a goaltender is on his way to the players' bench during game action and an icing is signalled, icing will be called if he makes no attempt to play the puck and either continues to the players' bench or returns directly to his goal crease without attempting to play the puck.
v. If a goaltender is on his way to the players' bench during game action and an icing is signalled, no icing will be called if he plays or attempts to play the puck.

RULE 206 – TIMEOUTS AND THE GOALTENDER

i. A goaltender is allowed to go to his players' bench only during a team or television timeout.

RULE 207 – GOALTENDER PENALTIES/OVERVIEW

i. A goaltender who fouls an attacking skater will be assessed at least a minor penalty.
ii. A goaltender never serves a penalty or penalties assessed to him or his team which requires him to sit in the penalty box.
iii. Any additional penalties which are assessed to a goaltender at the same stoppage of play apply and must be served by a skater on his team who was on the ice at the time play was stopped to assess the penalty (provided that skater did not incur penalties himself).
iv. A skater who serves a penalty for a goaltender must have been on the ice at the time of the whistle to assess the penalty.
v. For a first misconduct penalty to a goaltender, he continues to play. This penalty must be served by a skater who was on the ice at the time game action was stopped (provided that skater did not incur penalties himself).
vi. A goaltender who is assessed a second misconduct penalty in a game (which results in an automatic game-misconduct penalty) must leave the game and be replaced by the backup goaltender.
vii. For major, game-misconduct, and match penalties, the goaltender himself is ejected.
viii. In case of major or match penalties to a goaltender, the five-minute penalty must be served by a skater on his team who was on the ice at the time play was stopped (provided that skater did not incur penalties himself).
ix. In any instance when a goaltender is ejected from a game, the backup goaltender must be the first option to replace the ejected goaltender before a skater can dress as a goaltender.
x. When a goaltender is assessed more than one minor or major penalty at the same stoppage of play, one skater of his team designated by the coach through the captain who was on the ice at the time the

play was stopped can serve any and all of these penalties (provided that skater did not incur penalties himself).

xi. If a goaltender is assessed both a minor penalty and misconduct penalty at the same time, one skater who was on the ice at the time game action was stopped must serve the minor penalty and a second skater who was on the ice at the time game action was stopped must serve the full 12 minutes. Both players must be designated by the coach through the captain.

RULE 208 – GOALTENDER PENALTIES/DESCRIPTION

i. A goaltender is subject to all penalties outlined in Section 10 – Description of Game Penalties. Additionally, there are rules specific to his position on ice, his equipment, and his role in the game as outlined below.

RULE 209 – BEYOND CENTRE RED LINE/GOALTENDER

DEFINITION: A goaltender is not allowed to participate in game action across the centre red line at any time.

i. A minor penalty will be assessed for violation of this rule.
ii. Both skates must be over the centre red line for a penalty to be assessed.
iii. A goaltender who participates in team celebrations in the attacking half of the ice following a goal will be assessed a minor penalty.
iv. This rule is superseded by rules for fighting if the goaltender skates over the centre red line to engage in a confrontation.

RULE 210 – BROKEN STICK/GOALTENDER

DEFINITION: A stick that is not fully intact, has a broken blade or shaft, or is no longer whole is considered broken and, as such, illegal.

i. A goaltender must drop a broken stick immediately. If he participates in game action with a broken stick he will be assessed a minor penalty.
ii. A goaltender whose stick is broken is forbidden to receive a stick thrown onto the ice from either the players' bench or from a spectator, but he may receive a stick from a teammate on the ice at the time without having to proceed to his players' bench to obtain a new one. This exchange, however, must be made hand-to-hand. See also Rule 120-iii and 120-iv.
iii. A goaltender who skates to his players' bench during a stoppage of play to replace his stick, and then returns to his goal crease, will be assessed a minor penalty. However, if he is substituted until play has resumed, no penalty will be assessed.
iv. A goaltender is allowed to go to the players' bench and change his stick during game action.

v. At no time is a goaltender allowed to grab an opponent's stick: (1) from an opponent on ice who may either be holding the stick or who may have dropped it to the ice; (2) from an opponent sitting on his players' bench; (3) from the stick rack at the opponent's bench. Any violation of this rule will result in a minor penalty.
vi. If a goaltender whose stick is broken receives a stick during game action from a teammate in the penalty box, the goaltender receiving the stick will be assessed a minor penalty.
vii. A goaltender may use a skater's stick.
viii. A goaltender cannot use more than one stick at any one time.

RULE 211 – DANGEROUS EQUIPMENT/GOALTENDER

DEFINITION: A goaltender's equipment must conform to safety standards, be of acceptable quality and working order, and be worn inside his uniform (except gloves, facemask, and pads).

i. The team of a goaltender who participates in game action with illegal equipment will first be issued a warning by the referee. Failure to comply with the warning to adjust, replace, or secure any equipment as per the referee's instructions will mean any player from that team subsequently violating rules for dangerous equipment will be assessed a misconduct penalty.

RULES 212–217 – DELAY OF GAME/GOALTENDER

DEFINITION: An intentional act to slow the game, force play to be stopped, or hinder the start of play.

RULE 212 – DELAY OF GAME/GOALTENDER – ADJUSTMENT OF EQUIPMENT

i. A goaltender who stops game action or delays the start of game action to repair or adjust his equipment will be assessed a minor penalty.

RULE 213 – DELAY OF GAME/GOALTENDER – DISPLACED GOAL FRAME

i. A goaltender who deliberately displaces the goal frame from its normal position will be assessed a minor penalty.
ii. If a goaltender displaces the goal frame from its normal position in the last two minutes of regulation time or at any time in overtime, a penalty shot will be awarded to the opposition.
iii. If a goaltender displaces the goal frame from its normal position during a penalty shot or during a penalty-shot shootout, a goal will be awarded unless Rule 178-vi or 178-vii applies.

RULE 214 – DELAY OF GAME/GOALTENDER – FREEZING THE PUCK ALONG BOARDS

i. A goaltender who holds or plays the puck with his stick, skates, or body along the boards in such a manner as to cause a stoppage of play will be assessed a minor penalty, even if he is being checked.

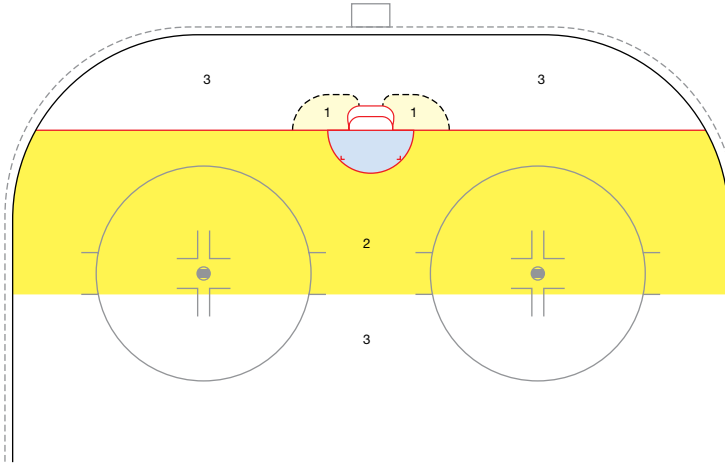

1 Goaltender is allowed to freeze the puck only when the goaltender's body remains at least partially in the goal crease.

2 Goaltender is allowed to freeze the puck only when he is pressured.

3 Goaltender is not allowed to freeze the puck.

RULE 215 – DELAY OF GAME/GOALTENDER – GOING TO PLAYERS' BENCH DURING STOPPAGE

i. A goaltender who goes to his players' bench during a stoppage of play that is not a television timeout or a team timeout, except to be replaced, will be assessed a bench-minor penalty.

RULE 216 – DELAY OF GAME/GOALTENDER – REMOVING FACEMASK

i. A goaltender who deliberately removes his facemask during game action in order to stop play will be assessed a minor penalty.

RULE 217 – DELAY OF GAME/GOALTENDER – SHOOTING OR THROWING THE PUCK OUT OF PLAY

i. A goaltender who shoots, throws, or bats the puck directly out of the playing area from inside his defending zone anywhere in the rink (except where there is no protective glass) during game action, without any deflection will be assessed a minor penalty. The determining factor will be the position of the puck when it is played.

ii. A goaltender will not be penalized if he deflects the puck over the protective glass while making a save, but if he makes a save and in the same motion bats or swats the puck out of play, he will be assessed a minor penalty.
iii. A goaltender who deliberately shoots the puck out of play anywhere on the ice during game action or a stoppage will be assessed a minor penalty.

RULE 218 – DROPPING THE PUCK ON GOAL NETTING/ GOALTENDER

DEFINITION: A goaltender is not allowed to drop the puck on top of the goal netting or on the back of the goal net to cause a stoppage in play.

i. A goaltender who deliberately drops the puck onto the goal netting or on the back of the goal net to cause a stoppage of play will be assessed a minor penalty.
ii. If the puck bounces onto the goal netting, a goaltender is allowed to cover the puck with his glove to prevent an opponent from playing it.

RULE 219 – FIGHTING/GOALTENDER

DEFINITION: Hitting an opponent with gloves on or removing gloves to engage in fisticuffs.

i. A goaltender who uses his blocker glove to punch an opponent in the head, neck, or face will be assessed a match penalty.
ii. A goaltender who removes his glove and blocker to engage in a confrontation with an opponent will be assessed a misconduct penalty in addition to any other penalties.
iii. A goaltender who starts a fight will be assessed a match penalty.

RULE 220 – HOLDING THE PUCK IN GOAL CREASE/GOALTENDER

DEFINITION: After making a save, a goaltender is allowed to freeze the puck in his goal crease so long as he is being pressured by an opponent. If he is not being pressured and has time to make a play safely to a teammate, he is obliged to do so.

i. Unless he is being pressured by an opponent, a goaltender who holds the puck more for than three seconds will be assessed a minor penalty.
ii. A goaltender who is not under pressure and deliberately drops the puck into his pads, body, or equipment in order to gain a stoppage in play will be assessed a minor penalty.

RULE 221 – HOLDING THE PUCK OUTSIDE GOAL CREASE/ GOALTENDER

DEFINITION: A goaltender is not allowed to fall on the puck to cause a stoppage in play in certain situations if his body is outside the goal crease.

i. A goaltender whose body is entirely outside the goal crease, and when the puck is behind the icing line or beyond the hash marks, falls on or gathers the puck into his body, or holds or places the puck against any part of the goal net or the boards, will be assessed a minor penalty whether or not he is being pressured by an opponent.

ii. A goaltender who falls on or gathers the puck into his body in the area between the icing line and the hash marks of the end zone faceoff circles will be assessed a minor penalty unless he is being pressured by at least one opponent.

RULE 222 – ILLEGALLY BLOCKING GOAL NET OR PILING SNOW/GOALTENDER

DEFINITION: A goaltender is not allowed to leave his stick or other equipment or pile snow or other objects in front of his goal net which prevents the puck from entering the goal net. It is his responsibility to keep his goal crease clear of obstacles.

i. A goaltender will be assessed a minor penalty if he leaves his stick or other equipment or piles snow or other objects in front of his goal net, and any of such obstacles prevents the puck from entering the goal net while he is on the ice.

RULE 223 – LEAVING GOAL CREASE DURING PLAYER CONFRONTATION/GOALTENDER

DEFINITION: A goaltender must remain in his goal crease during a player confrontation on ice except if that confrontation moves into his goal crease.

i. A goaltender who leaves the immediate vicinity of his goal crease to participate in any way in a confrontation will be assessed a minor penalty.

ii. A goaltender who is outside of his goal crease (i.e., to play the puck behind the goal net, to go to the players' bench) and becomes involved in a player confrontation will not be assessed a penalty for leaving his goal crease, but he is subject to other penalties based on his actions during that confrontation.

iii. If a player confrontation takes place in his goal crease, the goaltender can leave his goal crease without penalty. Additionally, he must leave his goal crease or skate to a corner or any area in his defending zone nearest to his goal crease which is not part of a player confrontation if instructed to do so by an on-ice official.

RULE 224 – TOO MANY MEN – GOALTENDER

DEFINITION: A goaltender cannot play the puck or make contact with an opponent when leaving the ice if the substituting player has already come onto the ice.

i. All rules apply to a goaltender for too many men as they do for skaters (see Rule 166).
ii. At no time during game action is a team allowed to have two goaltenders on the ice except for the time it takes one goaltender to change with another goaltender "on the fly".

RULE 225 – PENALTY SHOTS/FOULS BY A GOALTENDER

i. If a goaltender commits a foul on an attacking skater who is on a breakaway, the referee will award the opposing team a penalty shot regardless if the foul takes place from behind or not.
ii. If a goaltender deliberately displaces the goal frame from its normal position during the last two minutes of regulation time, or at any time in overtime, the referee will award the opposing team a penalty shot.
iii. If a goaltender deliberately displaces the goal frame from its normal position when an attacking skater is on a breakaway, the referee will award the attacking skater a penalty shot.
iv. If a backup goaltender enters the game illegally and interferes with an attacking skater who is on a breakaway, the referee will stop play and award the opposing team a penalty shot. If the player scores a goal prior to the whistle, the goal will stand and the penalty shot will be cancelled.
v. If a goaltender removes his facemask when an attacking skater is on a breakaway, the referee will stop play and award the opponent a penalty shot.

RULE 226 – AWARDED GOALS/FOULS BY A GOALTENDER

See also Rule 177-v

i. If, during the course of a penalty shot, the goaltender moves or dislodges the goal frame, a goal will be awarded unless otherwise provided by these rules (see Rule 178-vi and 178-vii).
ii. If, during the course of a penalty shot, the goaltender removes his facemask, a goal will be awarded.
iii. If, during the course of a penalty shot, the goaltender throws his stick at the puck or puck carrier, a goal will be awarded.

SUMMARY OF PENALTIES

PENALTY	RULE	STANDARD
Abuse of Officials	116	Minor/Bench minor
Abuse of Officials – intentional contact	116	Match (MP)
Bench minor	117	Bench Minor
Biting	118	Match (MP)
Boarding	119	Minor
Broken Stick/Playing with Replacing	120	Minor
Butt-ending	121	Double Minor + Misconduct
Charging	122	Minor
Checking from Behind	123	Minor + Misconduct
Checking to the Head or Neck	124	Minor + Misconduct
Clipping	125	Minor
Closing hand on puck	126	Minor
Cross-checking	127	Minor
Dangerous equipment	128	Warning/Misconduct
Delay of Game	129–137	Minor/Bench minor
** Displaced goal frame	130	Minor
** Falling on the puck	131/172	Minor
** Freezing the Puck	132	Minor
**Goal Celebration	133	Warning/Minor
** Late Lineup	134	Minor
** Shooting/Throwing Puck out of Play	135	Minor
** Substitution after Icing	136	Warning/Minor
** Violation of Faceoff Procedures	137	Warning/Minor
Diving or Embellishment	138	Minor
Elbowing	139	Minor
Engaging with spectators	140	Match (MP)
Fighting	141	Major + GM
** Removing gloves	141	Misconduct
** First player off players' bench or out of the penalty box	141	Double minor + GM
** Other players beavng players' bench	141	Misconduct
** Other players leaving penalty box	141	Minor + GM
Head-butting	142	Match (MP)
High-sticking	143	Minor/Double Minor
** Accidental Injury	143	Double minor
Holding	144	Minor
Holding the stick	145	Minor
Hooking	146	Minor
Illegal Stick/Stick Measurement	147	Minor/Bench minor
Incorrect access to/from penalty box	148	Minor
Injured Skater Refusing to Leave Ice	149	Minor

ADDITIONAL OPTIONS	INJURED PLAYER
Misconduct/GM	
Misconduct/GM	
Major + GM/MP	Major + GM/MP
Major + GM/MP	Match
Major + GM/MP	Major + GM/MP
Major + GM/MP	Match
Major + GM/MP	Match
Major + GM/MP	Major + GM/MP
Penalty Shot	
Major + GM/MP	Major + GM/MP
Penalty Shot	
Penalty Shot	
Major + GM/MP	Major + GM/MP
MP	
Major + GM/MP	Major + GM/MP
Major + GM/MP	Major + GM/MP
Misconduct	
Misconduct	

PENALTY	RULE	STANDARD
Interference (on Skater)	150	Minor
Interference (on Goaltender)	151	Minor
Kicking	152	Match (MP)
Kneeing	153	Minor
Leaving Penalty Box Prematurely	154	Minor
Playing without helmet	155	Minor
Pulling Hair, Helmet, Cage	156	Minor
Refusing to Start Play	157	Bench Minor
Roughing	158	Minor/Double Minor
Slashing	159	Minor
Slew-footing	160	Match (MP)
Spearing	161	Double Minor + Misconduct
Spitting	162/169	Match
Taunting	163	Misconduct
Team Official Entering Playing Area	164	Game misconduct (GM)
Throwing a Stick or Object	165	Minor/Bench minor
** From the Bench	165	Additionnal GM
Too Many Men	166	Bench Minor
Tripping	167	Minor
Unsportsmanlike Conduct	168	Minor/Bench Minor
Illegal Hit (Women)	169	Minor

GM = Game Misconduct

MP = Match Penalty

ADDITIONAL OPTIONS	INJURED PLAYER
	Major + GM/MP
	Major + GM/MP
Major + GM/MP	Major + GM/MP
Minor + GM	
Major + GM	
Stop play	
Major + GM	
Major + GM/MP	Major + GM/MP
Major + GM/MP	MP
Penalty Shot	
Penalty Shot	
Major + GM/MP	Major + GM/MP
Misconduct/GM	MP
Major + GM/MP	Major + GM/MP

APPENDIX 1 – RECORDING STATISTICS

See also IIHF Case Book – Scoring a Goal

GOALS AND ASSISTS

i. A goal will be credited in the scoring records to the player who propelled the puck into the opponent's net or to whomever on the offensive team was the last player to touch the puck before it entered the attacking net.
ii. When a goal has been scored, a maximum of two assists can be credited to the player(s) who last touched the puck before the scorer. If no player other than the scorer touched the puck prior to the start of possession by the attacking team, the goal will be marked as "unassisted".
iii. The player who scores the winning goal in a penalty-shot shootout will be the only player to be credited with a goal during the PSS.
iv. The first name to appear after the goalscorer's refers to the first assist or the last player to touch the puck before the scorer.
v. Each goal and all assists will count as one point in the player's statistical record.
vi. No assists are added to goals which : (a) do not enter the net (awarded goals); (b) are credited from the penalty-shot shootout; (b) are counted as a result of an "own goal". (see definition OWN GOAL)

EMPTY-NET GOAL

A goal scored while the opposing goaltender is on his players' bench and not on ice tending the goal. The goaltender is not credited with a goal allowed if he is on the players' bench.

EVEN-STRENGTH GOAL

A goal scored when both teams have the same number of skaters on the ice.

EXTRA-ATTACKER GOAL

A goal scored by a team whose goaltender is on the players' bench in favour of an extra skater.

FACEOFF WIN/LOSS

Determined by the team that gains immediate possession of the puck after a faceoff.

GAME-WINNING GOAL

In a game, the goal scored which represents one more than the total scored by the opposition (i.e., if a team wins a game 5–2, the player who scores the third goal is credited with the game-winning goal); In a penalty-shot shootout, it is the decisive goal in the shootout (i.e., if a team

wins the shootout, 2–0, the player who scored the first goal is credited with the winning goal)

GOALTENDER LOSS
The goaltender who surrenders the game-winning goal (i.e., if a team loses 6–4, the goaltender who surrendered the fifth goal is credited with the loss).

GOALTENDER WIN
The goaltender who is in goal when the winning team scores the game-winning goal (i.e., if a team wins 6–4, the goaltender who is in goal for the winning team when it scores the fifth goal is credited with the win).

GOALS AGAINST
Goals allowed by a goaltender while he is on the ice. Empty-net goals are not charged to a goaltender. A goaltender who surrenders the winning goal during a penalty-shot shootout will also be charged with one shot on goal and one goal allowed.

GOALS AGAINST AVERAGE
Calculated by dividing the number of goals a goaltender allows by minutes played and multiplying this number by 60 (the length of a regulation game).

OWN GOAL
A goal scored by virtue of a defending player shooting the puck directly into his own goal net. A puck that deflects off the stick or any part of a defending player's body and enters the goal net is not considered an own goal.

PENALTY MINUTES BY NUMBERS
Minor penalty = 2 pim
Major penalty = 5 pim
Misconduct penalty = 10 pim
Game Misconduct penalty = 20 pim
Match Penalty = 25 pim

PLUS/MINUS
Calculated by subtracting the number of goals scored against his team while a player is on the ice (not including power-play goals to either team) from the number of goals scored by his team while a player is on the ice.

POINTS
Calculated by adding goals and assists.

POWER-PLAY GOAL
A goal scored by a team that has one or more skaters on ice than its opponent at the time the goal was scored.

SAVE PERCENTAGE
Calculated by dividing the number of goals a goaltender allows by the total shots he has faced.

SHORT-HANDED GOAL
A goal scored by a team that has one or fewer skaters on ice than its opponent at the time the goal was scored.

SHOT ON GOAL
Any time a puck is directed to the goal and either goes into the net or would have gone into the net had the goaltender (or defensive teammate) not made a save.

SHUTOUT
A game in which a goaltender does not surrender a goal during the course of a full game. If two goaltenders combine to earn a shutout, neither gets credit for a shutout in his own statistical report but the team is credited with a shutout. If a goalie loses 1–0 in overtime or a penalty-shot shootout, he does not get credit with a shutout.

TIME ON ICE
The amount of time a player is on the ice during game action (i.e., when the clock is running).

REFEREE AND LINESMEN SIGNALS

REFEREE SIGNALS

RULE 61 – TEAM TIMEOUT
Using both hands to form a “T” in front of the chest.

RULE 74 – HAND PASS
Using open palm of hand in a pushing motion.

RULE 184-i – ATTACKING PLAYER IN THE GOAL CREASE
Semi-circular motion by one arm at chest height made parallel to the ice surface, simulating the goal crease, and then extending the other arm horizontally with the hand pointing in the direction of the neutral zone.

RULE 92 – PLAYER CHANGE SIGNAL
The referee allows a five second period to the visiting team to make a player(s) change. After the five seconds, the referee shall raise his arm, which indicates that the visiting team may no longer change any player and the home team has five seconds to change players.

RULE 94 – GOAL SCORED
An extension of the arm pointing at the goal to indicate the puck has entered the net.

RULES 107 AND 109 – MIS-CONDUCT PENALTY AND GAME-MISCONDUCT PENALTY
Both hands on the hips.

RULE 110 – MATCH PENALTY
Place the palm of one hand on top of the helmet.

RULE 114 – DELAYED PENALTY IN EFFECT
Extended the non-whistle arm fully above the head. It is acceptable to point at the player first and then extend the arm above the head.

RULE 119 – BOARDING
Striking the clenched fist of one hand into the open palm of the opposite hand in front of the chest.

RULE 121 – BUTT-ENDING
A cross motion of the forearms, one moving under the other. Upper hand is open and the lower hand a clenched fist.

RULE 122 – CHARGING
Rotating clenched fists around one another in front of the chest.

RULE 123 – CHECKING FROM BEHIND
A forward motion of both arms, with the palms of the hands open and facing away from the body, fully extended from the chest at shoulder level.

RULE 124 – CHECKING TO THE HEAD OR NECK
The side movement of the open palm of the hand towards the side of the head.

RULE 125 – CLIPPING
Striking leg with either hand below the knee from behind, keeping both skates on the ice.

RULE 127 – CROSS-CHECKING
A forward and backward motion of the arms with both fists clenched, extending from the chest for a distance of about a half a metre.

RULE 139 – ELBOWING
Tapping either elbow with the opposite hand.

RULES 135 and 217 – DELAYING THE GAME
Placing the non-whistle hand, open palm, across the chest and extended from the shoulder out from the body.

RULE 143 – HIGH STICKING
Holding both fists clenched, one immediately above the other at the height of the forehead.

RULE 144 – HOLDING
Grasping either wrist with the other hand in front of the chest.

RULE 145 – HOLDING THE STICK

Two-stage signal involving the holding signal followed by an indication using two hands to hold a stick in a normal manner.

RULE 146 – HOOKING

A tugging motion with both arms as if pulling from in front toward the stomach.

RULES 150–151 – INTER-FERENCE
Crossed arms with closed fists stationary in front of the chest.

RULE 153 – KNEEING
Tapping either knee with the palm of the hand, while keeping both skates on the ice.

RULE 158 – ROUGHING
Fist clenched and arm extended out to the side of the body.

RULE 159 – SLASHING
A chopping motion with the edge of one hand across the opposite forearm.

WASH OUT
A sweeping sideways motion of both arms across the front of the body at shoulder level with palms down. For the referee, this is used to signal no goal, no hand pass, or no high-sticking. For linesmen, it is used to signal no icing and no offside.

RULE 161 – SPEARING
Jabbing motion with both hands thrusting out immediately in front of the body and then hands lowered to the side of the body.

RULE 167 – TRIPPING
Striking leg with a moving follow through motion with either hand below the knee, keeping both skates on the ice.

RULE 170 – PENALTY SHOT
Arms crossed above the head.

REFEREE SIGNALS (WOMEN)

RULE 169 – ILLEGAL HIT (WOMEN)

The palm of the non-whistle hand is brought across the body and placed on the opposite shoulder.

LINESMEN SIGNALS

RULE 65 – ICING THE PUCK

The back linesman (or referee in the two-man system) signals a possible icing by fully extending either arm over his head. The arm must remain raised until the front linesman or referee either blows the whistle to indicate an icing, or until the icing is washed out. Once the icing has been completed, the back linesman or referee shall first cross his arms in front of the chest and then shall point to the appropriate faceoff spot and skate to it.

RULE 78 – OFFSIDE

The official must first blow the whistle and then extend the arm horizontally pointing along the blue line with the non-whistle hand.

RULE 82 – DELAYED OFFSIDE

Non-whistle arm fully extended above the head. To cancel out a delayed offside, the linesman must lower the arm to the side.

RULE 166 – TOO MANY MEN
Indication with six fingers (one hand open) in front of the chest.

INDEX

INDEX	RULE
ABUSE OF OFFICIALS	116
AWARDED GOALS	179
AWARDED GOALS/BLOCKING THE GOAL NET	180
AWARDED GOALS/FOULS BY A GOALTENDER	226
AWARDING A PENALTY SHOT/BREAKAWAY	171
AWARDING A PENALTY SHOT/INTERFERENCE OR THROWING OBJECTS	172
AWARDING A PENALTY SHOT/LAST TWO MINUTES OF REGULATION/OVERTIME	173
AWARDING A PENALTY SHOT/PLAYER DISPLACING GOAL NET	174
AWARDING A PENALTY SHOT/SKATER FALLING ON PUCK	175
BENCH-MINOR	117
BEYOND CENTRE RED LINE/GOALTENDER	209
BITING	118
BLOCKING GLOVE/GOALTENDER	188
BOARDING	119
BROKEN STICK/GOALTENDER	210
BROKEN STICK/PLAYING WITH – REPLACING	120
BUTT-ENDING	121
CAPTAIN AND ALTERNATE CAPTAINS	28
CHANGE OF ENDS	50
CHARGING	122
CHECKING FROM BEHIND	123
CHECKING TO THE HEAD OR NECK	124
CHEST AND ARM PROTECTION/GOALTENDER	189
CLIPPING	125
CLOSING HAND ON PUCK	126
COINCIDENT PENALTIES	112
CROSS-CHECKING	127
DANGEROUS EQUIPMENT (DEFINITION)	29
DANGEROUS EQUIPMENT (PENALTY)	128
DANGEROUS EQUIPMENT/GOALTENDER	211
DEFINING ON/OFF ICE	87
DELAY OF GAME/ADJUSTMENT OF EQUIPMENT	129
DELAY OF GAME/DISPLACED GOAL FRAME	130
DELAY OF GAME/FALLING ON THE PUCK	131
DELAY OF GAME/FREEZING THE PUCK UNNECESSARILY	132
DELAY OF GAME/GOAL CELEBRATION	133
DELAY OF GAME/GOALTENDER – ADJUSTMENT OF EQUIPMENT	212
DELAY OF GAME/GOALTENDER – DISPLACED GOAL NET	213
DELAY OF GAME/GOALTENDER – FREEZING THE PUCK ALONG BOARDS	214
DELAY OF GAME/GOALTENDER – GOING TO PLAYERS' BENCH DURING STOPPAGE	215
DELAY OF GAME/GOALTENDER – REMOVING FACEMASK	216

INDEX	RULE
DELAY OF GAME/GOALTENDER – SHOOTING OR THROWING THE PUCK OUT OF PLAY	217
DELAY OF GAME/LATE LINEUP	134
DELAY OF GAME/SHOOTING OR THROWING THE PUCK OUT OF PLAY	135
DELAY OF GAME/SUBSTITUTION AFTER AN ICING CALL	136
DELAY OF GAME/VIOLATION OF FACEOFF PROCEDURES	137
DELAYED OFFSIDE	82
DELAYED OFFSIDE/HYBRID ICING	83
DELAYED PENALTY CALL	114
DELAYED START TIME OF PENALTIES	113
DETERMINING FACEOFF LOCATION/ATTACKING ZONE	57
DETERMINING FACEOFF LOCATION/CENTRE-ICE SPOT	56
DETERMINING FACEOFF LOCATION/DEFENDING ZONE	55
DETERMINING FACEOFF LOCATION/GENERAL	52
DETERMINING FACEOFF LOCATION/INJURY	54
DETERMINING FACEOFF LOCATION/PENALTIES ASSESSED	53
DISALLOWING A GOAL/GAME ACTION	97
DIVING OR EMBELLISHMENT	138
DOORS	16
DOPING	6
DROPPING THE PUCK ON GOAL NETTING/GOALTENDER	218
DURATION OF PENALTIES/GAME MISCONDUCT	109
DURATION OF PENALTIES/MAJOR	105
DURATION OF PENALTIES/MATCH	110
DURATION OF PENALTIES/MINOR AND MAJOR	106
DURATION OF PENALTIES/MINOR AND MISCONDUCT	108
DURATION OF PENALTIES/MINOR – BENCH MINOR	104
DURATION OF PENALTIES/MISCONDUCT	107
ELBOW PADS	30
ELBOWING	139
ENGAGING WITH SPECTATORS	140
FACEMASK/GOALTENDER	190
FACEOFFS AFTER OFFSIDE	80
FACEOFFS/GOALTENDER	204
FACIAL PROTECTION & MOUTH GUARD	31
FALSE FACEOFFS	59
FIGHTING	141
FIGHTING/GOALTENDER	219
FLUORESCENT MATERIAL	32
FORFEIT GAMES	22
GAME ACTION/GOALTENDER	200
GENDER PARTICIPATION	2
GLOVES	33
GOAL CREASE AS IT PERTAINS TO SCORING GOALS	95
GOAL NET	20

INDEX	RULE
GOALS WITH THE SKATE	96
GOALTENDER AND GOAL CREASE	184
GOALTENDER AND GOAL CREASE/GOAL ALLOWED	185
GOALTENDER AND GOAL CREASE/GOAL DISALLOWED	186
GOALTENDER AS CAPTAIN OR ALTERNATE CAPTAIN	182
GOALTENDER EQUIPMENT/GENERAL	187
GOALTENDER PENALTIES/DESCRIPTION	208
GOALTENDER PENALTIES/OVERVIEW	207
GOALTENDER SUBSTITUTIONS	202
GOALTENDER WARMUP	181
HAND PASS	74
HEAD-BUTTING	142
HELMET	34
HIGH STICKING THE PUCK INTO THE GOAL NET	76
HIGH STICKING THE PUCK/GAME ACTION	75
HIGH-STICKING	143
HOLDING	144
HOLDING THE PUCK IN GOAL CREASE/GOALTENDER	220
HOLDING THE PUCK OUTSIDE GOAL CREASE/ GOALTENDER	221
HOLDING THE STICK	145
HOOKING	146
HOW THE GAME IS PLAYED	43
ICE SURFACE MARKINGS/CREASES	19
ICE SURFACE MARKINGS/FACEOFF CIRCLES AND SPOTS	18
ICE SURFACE MARKINGS/ZONES	17
ICE SURFACE/FIT TO PLAY	8
ICING AND THE GOALTENDER	205
ICING THE PUCK/GAME SPECIFICS	66
ICING THE PUCK/HYBRID	65
ILLEGAL ACCESS OF OPPONENT'S PLAYERS' BENCH	89
ILLEGAL HIT (WOMEN)	169
ILLEGAL STICK – STICK MEASUREMENT	147
ILLEGAL SUBSTITUTION/GOALTENDER	203
ILLEGALLY BLOCKING GOAL NET OR PILING SNOW/GOALTENDER	222
IMPLICATIONS OF PENALTIES	101
INCORRECT ACCESS TO OR FROM PENALTY BOX	148
INELIGIBLE PLAYER IN A GAME	23
INJURED ON-ICE OFFICIALS	86
INJURED SKATER	85
INJURED SKATER REFUSING TO LEAVE THE ICE	149
INTENTIONAL OFFSIDE	84
INTERFERENCE	150
INTERFERENCE BY SPECTATORS	64
INTERFERENCE ON A GOALTENDER	151

INDEX	RULE
INTERNATIONAL ICE HOCKEY FEDERATION (IIHF) AS GOVERNING BODY	1
KICKING	152
KNEE PROTECTION/GOALTENDER	191
KNEEING	153
LEAVING GOAL CREASE DURING PLAYER CONFRONTATION/GOALTENDER	223
LEAVING THE PENALTY BOX PREMATURELY	154
LENGTH OF PLAY	44
MEASUREMENT OF A PLAYER'S EQUIPMENT	41
MEASUREMENT OF A SKATER'S STICK/PENALTY-SHOT SHOOTOUT	42
NECK AND THROAT PROTECTOR/GOALTENDER	192
NECK AND THROAT PROTECTOR/SKATER	35
OBJECTS ON ICE	11
OFFSIDE	78
OFFSIDE SITUATIONS	79
ON-ICE OFFICIALS	4
ONSIDE	81
OVERTIME PERIOD	62
PADS/GOALTENDER	193
PANTS/GOALTENDER	194
PENALTIES IN OVERTIME	115
PENALTIES ON SCORECLOCK	102
PENALTY BOXES	10
PENALTY SHOTS AND PENALTY-SHOT SHOOTOUT AS PART OF THE GAME	170
PENALTY SHOTS/FOULS BY A GOALTENDER	225
PENALTY SITUATIONS	111
PENALTY-SHOT PROCEDURE/OVERVIEW	176
PENALTY-SHOT PROCEDURE/SPECIFIC SITUATIONS	178
PENALTY-SHOT PROCEDURE/TAKING THE SHOT	177
PENALTY-SHOT SHOOTOUT	63
PLAYER CHANGE DURING GAME ACTION	88
PLAYER CHANGE DURING STOPPAGE	91
PLAYER CHANGE ON ICING CALLS	93
PLAYER CHANGE PROCEDURE	92
PLAYER ELIGIBILITY/AGE	3
PLAYERS DRESSED	24
PLAYERS ON ICE DURING GAME ACTION	27
PLAYERS' BENCH INSIDE BLUE LINE/OFFSIDE	90
PLAYERS' BENCHES	9
PLAYING SHORT-HANDED	103
PLAYING WITHOUT A HELMET	155
PROCEDURE FOR CONDUCTING FACEOFFS	58
PROPER AUTHORITIES AND DISCIPLINE	5

INDEX	RULE
PROTECTION OF GOALTENDER	183
PROTECTIVE GLASS	14
PROTECTIVE GLASS/DAMAGED	77
PROTECTIVE NETTING	15
PUCK	47
PUCK IN PLAY	49
PUCK OFF END NETTING	70
PUCK OFF THE GOAL NET	72
PUCK ON DASHER	68
PUCK ON GOAL NET (BASE AND TOP)	69
PUCK OUT OF PLAY	67
PUCK OUT OF SIGHT	71
PUCK STRIKING AN ON-ICE OFFICIAL	73
PULLING HAIR, HELMET, CAGE	156
REFUSING TO START PLAY	157
RINK BOARDS	13
ROUGHING	158
SCORECLOCK	45
SCORING A GOAL	94
SCORING A GOAL/GOAL FRAME OFF	98
SHIN PADS	36
SKATES/GOALTENDER	195
SKATES/SKATER	37
SLASHING	159
SLEW-FOOTING	160
SPEARING	161
SPITTING	162
STANDARD DIMENSIONS OF RINK	12
STARTING GAME ACTION	51
STICK/GOALTENDER	196
STICK/SKATER	38
SWEATERS/GOALTENDER	197
TAPE	39
TAUNTING	163
TEAM COMPOSITION	21
TEAM OFFICIAL ENTERING THE PLAYING AREA	164
TEAM OFFICIALS AND TECHNOLOGY	26
TEAM PERSONNEL	25
TEAM TIMEOUT	61
TELEVISION TIMEOUTS	60
TERMINOLOGY	7
TIMEOUTS AND THE GOALTENDER	205
THROAT PROTECTOR/GOALTENDER	198
THROWING A STICK OR OBJECT	165
THROWING THE PUCK FORWARD/GOALTENDER	201
TOO MANY MEN	166

INDEX	RULE
TOO MANY MEN – GOALTENDER	224
TRIPPING	167
UNIFORMS/GOALTENDER	199
UNIFORMS/SKATER	40
UNSPORTSMANLIKE CONDUCT	168
USE OF VIDEO-GOAL JUDGE TO DETERMINE GOALS	99
WARMUP	48
WHEN PENALTIES CAN BE CALLED	100
WHISTLE	46

NOTES

NOTES

NOTES

International Ice Hockey Federation
Brandschenkestrasse 50
Postfach
CH-8027 Zurich

Phone +41 44 562 22 00
Fax +41 44 562 22 39
E-mail office@iihf.com

www.**IIHF**.com

International Luge Federation

IRO
INTERNATIONAL
LUGE REGULATIONS

- ARTIFICIAL TRACK -

2016 Edition

www.fil-luge.org

Approved at the 64th FIL Congress on June 17, 2016
in Lake Placid / USA

2016 Edition
International Luge Regulations
Artificial Track

§ 1 General Regulations 3

§ 2 FIL Competitions, Awarding
1. FIL Competitions 5
2. Procedure for the Awarding of FIL Competitions 5

§ 3 Competition Regulations
1. Disciplines 6
2. Competitions Runs 6
3. Regulations for Eligibility 6
4. Age Requirements 6
5. Seeded Groups 7
6. Competition Program 8
7. Cancellations, Competition Schedule 16
8. Authorization to Participate in Training 16
9. Authorization to Participate in Competition 17
10. Rankings 17

§ 4 Race Administration, Jury, Technical Delegate, International Judge
1. Race Administration 19
2. Jury 20
3. Technical Delegate 20
4. Combined Task of the Jury and Technical Delegates 21
5. International Judge 21

§ 5 Sled, Equipment and controls
1. General Regulations on Sled 22
2. General Regulations on Equipment 28
3. Inspection of the sled and race equipment 30

§ 6 Medical Service 34

§ 7 Advertising Regulations
1. Applicability, Measuring Procedure 35
2. Race Clothing 35
3. Safety Helmet 35
4. Visor 35
5. Caps, Headbands and other Headgear 35
6. Start Numbers 35
7. Luge Shoes 36
8. Gloves 36
9. Racing Sled 36
10. Athlete 36
11. Forbidden Advertising 36

§ 8 Training, Weigh-in, Individual Supplemental Weights
1. International Training Courses 37
2. Paid Training 37
3. Official Training 37
4. Weigh-In 39
5. Individual Supplemental Weights 39

§ 9 Race Preparation
1. Entries 41
2. Entry Fee 41
3. Draw 41

§ 10 Start, Finish, General Rules, Timing, Results
1. Start 43
2. Finish 43
3. General Rules 44
4. Timing 45
5. Results 46

§ 11 Disqualification, Protests
1. Violation of the Rules 48
2. Protests 48

§ 12 Awarding of Titles, Awards Ceremony
1. Titles for FIL World Championships 50
2. Titles for Continental Championships 50
3. Awarding of Titles in Case of a Reduction of Runs 50
4. Certificates 50
5. Medals 50
6. Pins for Competitors and Officials 51
7. Gifts of Honor and Mementos 51
8. Awards Ceremony and Conclusion of the Event 51

§ 13 Concluding Regulations 52

Supplements:

1. Regulation for Artificial Luge Tracks 53
2. Rules for Instruction of International Judge 56
3. Regulations for Audio-Visual Media Rights 58
4. Olympic Rules 60
5. Individual Weight Allowances 64

§ 1 General Regulations

1. The International Luge Regulations for Artificial Track (IRO) include the regulations for an orderly staging of all competitions of the sport of luge on artificial tracks including championships and international competitions of the FIL.
It is also valid for the luge competitions during Olympic Winter Games (OWG), please refer to Supplement 4.

2. The sanctioning body and event organizers as well as the participating nations, sport clubs, teams, athletes, judges and all assigned helpers are obliged to adhere to the following regulations and use them during the staging of competitions on artificial tracks during Olympic Winter Games, FIL Championships and international competitions provided that there are no IOC regulations, FIL statutes or resolutions of FIL bodies ruling against it.

3. Athletes registered by their National Federations (NFs) can participate in all FIL competitions if they have a valid FIL license.
The licenses are filled out by the respective National Federation on behalf of the FIL and are newly signed by the President of the respective NF or by a person authorized by him/her every season.
With the signature of the National Federation's representative, it has to be confirmed that
   a) the athlete is a member of his/her federation or one of its associated clubs,
   b) the athlete is insured for practicing the sport of luge also in foreign countries,
   c) the athlete has a medical certificate that is based on a medical examination conducted during the last 12 month or a subsequent medical examination in the event of a serious injury, and states that from a point of view of sports medicine, he/she is fit for practicing the sport of luge,
   d) the athlete has received such a basic training that one could expect the athlete to be able to master luge tracks used for competitions in a safe way.

   The license only becomes valid after the athletes declare in writing that they bindingly acknowledge the statutes and regulations of the FIL, especially the IRO, the Law and Procedure Regulations of the FIL and that they have knowledge of the contents of all regulations.
The license has to be submitted to the race director prior to each competition.

4. The event organizer authorized to stage FIL competitions is obligated to conclude a liability insurance for the entire duration of the competition in which the extent of the coverage is to be regulated through a written agreement.
Any liability of the FIL will be explicitly excluded.

5. All national federations have the right to apply for the staging of FIL Championships and international competitions according to the regulations of the IRO.
With the application to host an event, the respective National Federation acknowledges the IRO regulations and all other FIL regulations.
Deviations from these regulations only become effective if they are explicitly approved by the FIL bodies responsible according to the statutes.

6. Athletes, FIL officials, National Federations, physicians, coaches, managers and other participants in the sport of luge are obligated to comply to the Anti-Doping Code of the FIL during and outside competitions.

7. Each participating athlete and official must behave fairly and in a sportsmanship like manner during a competition. Violations of the "Fair Play" Principle will be checked and lead to appropriate sanctions.

8. In case of discrepancies between the text of the IRO and the text of other FIL regulations or instructions of FIL bodies, the regulations of the IRO are decisive unless previous regulations of the FIL statutes state otherwise.

9. The word “athlete” used in the IRO includes both female and male competitors.

10. The sport year of the FIL starts on July 1st and ends on June 30th of the following year.

11. Violations against the regulations of the IRO result in disqualifications and/or other sanctions, which are specified in the Law and Procedure Regulations.

§ 2 FIL Competitions, Awarding

1. <u>FIL Competitions</u>

1.1 **Luge competitions during Olympic Winter Games (OWG)**

1.2 **FIL Championships, Rotation**

1.2.1 World Championships (FIL WCh)
- in each sport year, with the exception of the year in which the OWG will be staged

1.2.2 Continental Championships
(European Championships (ECh) / America Pacific Championships (APCh) /
Asian Championships (ACh)
- in every sport´s year as ”Race in Race” / World Cup (WC)

1.2.3 Junior World Championships (JWCh)
- in each sport´s year

1.2.4 Continental Championships Juniors
(European Juniors Championships (JECh) / Junior America Pacific Championships (JAPCh)
- in every sport´s year as ”Race in Race” / Juniors World Cup (JWC)

1.2.5 U23-World Championships
- in each sport year, except in the sport year in which the OWG take place as “Race in Race” / FIL WCh

FIL Championships (numbering) The Championships are numbered in a continuous order even if awarded championships are cancelled:

47th WCh 2017	XXIII OWG 2018	48th WCh 2019
48th ECh 2017	49th ECh 2018	50th WCh 2019
6th APCh 2016/17	7th APCh 2017/18	8th APCh 2018/19
2nd ACh 2016/17	3th ACh 2017/18	4th ACh 2018/19
32th JWCh 2017	33th JWCh 2018	34th WCh 2019
38th JECh 2017	39th JECh 2018	40th WCh 2019
6th JAPCh 2016/17	7th JAPCh 2017/18	8th JAPCh 2018/19

1.3 **International Competitions**

1.3.1 World Cup (WC)
The staging of World Cup races in blocks is allowed (i.e. three World Cup races in two weeks).

1.3.2 Team Relay World Cup (TWC)

1.3.3 Sprint World Cup (SWC)

1.3.4 Junior World Cup (JWC)
- min. 4 races

1.3.5 Youth A Word Cup (YAWC)
- min. 4 races
  1 drop result in the event of 5 or more YAWC competitions

Junior World Cup and Youth A World Cup are staged in one event.

1.3.6 Nations Cup (NC)
World Cup and Nations Cup are staged in one event.

1.3.7 Three-Tracks Tournament (Dreibahnen-Tournee DT)

1.3.8 FIL Youth Games

1.3.9 Other international competitions

2. **<u>Procedure for the awarding of FIL Competitions</u>**

2.1 The FIL Congress awards the FIL World Championships and the Junior World Championships a maximum of 4 years in advance.
The awarding is done upon written application from the National Federation.
The application according to the current form has to be submitted to the President of the FIL twelve weeks prior to the Congress.

2.2 The Executive Board awards the World Cup races with corresponding bidding criteria upon application by the National Federations.

2.3 All other FIL competitions are confirmed by the Executive Board.

§ 3 Competition Regulations

1. Disciplines

1.1 FIL competitions are staged in the following disciplines:

- Women - Singles
- Men - Singles
- Doubles
- Team Relay (§ 3, 6.7)
- Sprint competition
- Junior Team competition (§ 3, 10)

1.1.1 The Team Relay competition is obligatory during FIL WCh, ECh, and JWCh.

1.1.2 The Sprint competition is obligatory during FIL WCh. (§ 3, 2.6)

2. Competition Runs

	Singles	Doubles	Team Relay / Team Competition
FIL Championships	2	2	1
International Competitions	2	2	1

2.1 If a run is cancelled, disqualifications and eliminations as a result of a crash that have occurred during this run are not valid.

3. Regulations for Eligibility

		Women	Men	Doubles
3.1	FIL Championships	4	4	3
3.2	World Cup	4	5	3
3.3	Nations Cup refer to § 3, 6.5.1 Additional starters allowed for NC	2	3	2

- Additional starters will not be awarded WC points

3.4 Junior World Cup / Youth A World Cup:

	Junior	Youth A	Together
Men's singles	6	6	maximum 10
Women's singles	5	5	maximum 8
Doubles	3	3	6

4. Age Requirements

4.1 FIL competitions are staged in the following age classes:

- General Class
- Juniors
- Youth A
- Youth B
- Youth C
- Youth D
- Seniors

4.2 Athletes who compete in youth and junior competitions must belong to the following age classes:

Juniors	Maximum Age	Year of Event - 20
	Minimum Age	Year of Event - 19
Youth A	Maximum Age	Year of Event - 18
	Minimum Age	Year of Event - 15
Youth B	Maximum Age	Year of Event - 14
	Minimum Age	Year of Event - 13
Youth C	Maximum Age	Year of Event - 12
	Minimum Age	Year of Event - 11
Youth D	Maximum Age	Year of Event - 10

(Minimum age and maximum age = age class)

4.2.1 During a competition taking place at the beginning of the season (July 1st - December 31st), the athlete belongs to the age class valid for him/her during a competition starting on the following 1st of January.

4.2.2 Athletes belonging to the Youth Class A are eligible to start in the Junior Class.

4.2.3 Athletes belonging to the Youth Class B are eligible to start in the Youth Class A.
They can start with a 14 kg youth sled or a 16 kg youth sled B and/or a 24 kg youth double sled respectively.

4.2.4 The Youth Classes C and D may only start with a 14 kg youth sled and a 24 kg double sled in their classes.

4.3 For the OWG, FIL Championships and international competitions in General Class, athletes must have reached their sixteenth (16th) birthday during the sport year (§ 1, 10).

4.4 During the staging of competitions for seniors, athletes must have reached their 35th birthday.

5. Seeded Groups

5.1 During FIL competitions, seeded groups will start in all disciplines in the General Class, Junior and Youth A Class except in the Team Relay competition and in the team competition.

5.2 **Composition of seeded groups at FIL Championships and World Cup races (General Class)**
15 men
12 women
12 doubles
The seeded groups are set up by name.
At the beginning of each season, the seeded groups are set up new.
Athletes who are officially resigned are deleted from the seeded group/list.
The names of athletes from the seeded groups are to be confirmed by the team captain before each draw.

5.3 **Composition of seeded groups at Junior World Championships, Junior World Cups, and Youth A World Cups**
JWCh and JWC/YAWC:
Group A = twelve (12) athletes and/or double teams as per name (JWCh § 3, 6.9.3)
JWC/YAWC:
Group B = athletes and/or double teams with JWC/YAWC points as per name
Remaining group = athletes and/or double teams without JWC/YAWC points as per name
The names of athletes from the seeded groups are to be confirmed by the team captain before each draw.

5.4 **Calculation of seeded places**
The current positions in the seeded groups General Class (seeded list) result from the World Cup point ranking of the three previous World Cup races. The points from the Sprint World Cup to not count in the determination of the current places for the seeded groups.

For the Junior Class and Youth A Class, the current positions in the seeded groups A and B (seeded list) result from the current Junior or Youth A World Cup point ranking. For the 1st Junior World Cup and Youth A World Cup, the overall World Cup ranking of the previous season is valid. Beginners will start in the remaining group.

5.5 Junior World Championships, Junior World Cup, and Youth A World Cup: The seeded groups will generally be filled up to their full number.
In the absence of an athlete, the next ranked athlete moves up.

6. Competition Program

6.1 FIL World Championships in General Class (WCh)

6.1.1 Preliminary run:

- The seeded groups do not participate in the preliminary run; all other athletes determine their start position in the preliminary run for the 1st competition run.
- Start order according to the current seeded list, best place to last place. If athletes are tied in points, the start order is determined by a draw by the jury.
- Athletes without WC points will be placed at the end of the start list according to a draw.

Seeded group:
The seeded groups are newly formed for FIL World Championships. (§ 3, 5.4)
The starting order of the seeded group will be drawn:
Men: 1 - 7 + 8 - 15, Women: 1 - 6 + 7 - 12, Doubles: 1 - 6 + 7 - 12)
The 1st competition run will be as follows:

- Men 1 - 7, 8 - 15, 16 - last place according to placing in preliminary run
- Women 1 - 6, 7 - 12 13 - last place according to placing in preliminary run
- Doubles 1 - 6, 7 - 12, 13 - last place according to placing in preliminary run

Start order for the 2nd competition run

- Men 25 - 1 according to placing in 1st competition run
- Women 20 - 1 according to placing in 1st competition run
- Doubles 18 - 1 according to placing in 1st competition run

- Athletes, which do not qualify for the 2nd competition run, will be ranked according to their placing in the 1st competition run.
- If an athlete crashes in one of his race runs and does not cross the finish line he will be listed in the results with a DNF.

6.1.2 Qualification for FIL World Championships
Each athlete must participate in at least two International FIL competitions (before the WCh) in the current season. If an athlete in the current season before the FIL ITW has a ranking number in the Overall World Cup standing higher than top 32 men, 24 women or 24 doubles, participation in the FIL ITW is mandatory.

6. 2 Sprint World Championships (SWCh)

6.2.1 Participation eligibility per NF
4 men (singles)
4 women (singles)
3 doubles

6.2.2 Admission requirements
Athletes who are registered within the scope of the FIL World Championships regulations (§ 3, point 3.1) are eligible to start at the FIL Sprint World Championships

6.2.3 Registration/entry According to the IRO

6.2.4 Competition

The Sprint Cup is carried out in Singles and Doubles with one Qualifying run and one (1) competition run.

1) Qualifying run

All athletes take part in the qualifying run; the fastest 15 athletes in each discipline qualify for the Sprint World Championship Final.
Start order for the Qualifying run:
Place 15 – 1 and 16 – to the end according to the current "General class" World cup standing

2) Sprint World Championship Final (1 run)

Start order Place 15 - 1 according to the placement in the qualifying run.

6.2.5 Competition format

- Start: from the discipline start heights with shortened measured stretch start – finish (flying start);
- The timing starts after about 100 to 150 m after the start block;
- Finish light barrier unchanged;
- No coaches are permitted in the start area;
- During the competition, only the athlete starting next may enter the start area;
- The start order of the disciplines is set by the FIL in coordination with the OC;
- Track maintenance/preparation prior to each discipline

6.2.6 Scoring system

All athletes who do not qualify for the final run will have counted the result after the qualifying (16th place until end) counted.
If an athlete crashes in the final or in the qualifying run, this athlete will be considered in the results as a DNF.

6.2.7 Awards ceremony and awarding of titles ("Sprint World Champion in Luge")

As in the FIL WCh

6. 3 **U 23 World Championships** (U 23 WCh)

The U23 WCh will be staged as "race in race" with the World Championships (§ 2, 1.2.1)

- Athletes who participate in the U23 World Championships must comply with the following age regulations:
  - Maximum age: year of the event -23
  - Minimum age: in accordance with IRO § 3, 4.3
- The participating athletes must be registered for the FIL World Championships in the framework of the authorization to participate (§ 3, 3.1).
- Awarded title: Women/Men and Doubles, if at least three (3) athletes/athlete
- pairs/teams have reached a result in their respective discipline.
- The title holders and the rankings are determined from the rankings of the FIL-WCh race.
- Separate results list is drawn up for the U 23 World Championship rankings.

6.4 **Continental Championships** (European Championships (ECh), America Pacific Championships (APCh), Asian Championships (ACh)

6.4.1 Eligibility per NF

- 4 Men (S)
- 4 Women (S)
- 3 Doubles

6.4.2 Disciplines / Awarding of Titles

- Single and Double
- Team Relay (European Championships only)

6.4.3 The Continental Championships are staged as “Race in Race” at a World Cup.
6.4.4 Athletes who are registered for this World Cup in accordance to the authorization (§ 3,3.1 and § 3,3.2) are eligible to start.
6.4.5 Eligible athletes who did not qualify for this World Cup will be ranked according to the ranking in the Nations Cup.
6.4.6 Additional starters from the Nations Cup cannot be ranked (ECh, APCh, ACh), even if a registered athlete does not compete.
6.4.7 At the ECh, titles are awarded in the disciplines, men/women – singles, doubles, and Team Relay.
6.4.8 At APCh and ACh titles are only awarded if at least three (3) athletes/athlete pairs/teams have reached a result in their respective discipline.
6.4.9 The title holders and the rankings are determined from the rankings of the World Cup race.
6.4.10 A separate results list is drawn up for the championship rankings.

6.5 World Cup in General Class / Nations Cup

6.5.1 Nations Cup / Qualification for World Cup
The Nations Cup is carried out at every World Cup Event.
- Nations Cup and Qualification for the World Cup race will be carried out in one run.
- The qualification will take place if more than 17 men, 12 women and 12 doubles (without additional starters) are at the start.
- If the field of participants is smaller than the number of participants allowed to participate in the WC, then the result from the Nations Cup is drawn on to determine the start position in the WC race (last ranked- to first ranked athlete)
- Should an athlete not reach an end time, then he will be allocated the last start position before the seeded group. Should more than one athlete crash, then the start order of the crashed athletes will be drawn by the jury.

6.5.2 Participation NC
Non seeded athletes have to participate on Nations Cup/Qualification to be eligible to participate at the World Cup.
Athletes of the seeded group do not participate in the Nations Cup/Qualification.
In the absence of athletes from the seeded group, no athlete will move up.
For all other athletes (not for additional starters), the Nations Cup is considered as the qualification for the World Cup.

6.5.3 Start order for the Nations Cup / Qualification for World Cup
The start order arises from the current list of seeded groups:
Men - 16th place to the end / Women - 13th place to the end / Doubles - 13th place to the end,
Afterwards, athletes who do not come from the seeded list will start, these athletes will be drawn.
Additional starters will be placed at the end of the start list according to a draw.

6.5.4 Qualification for World Cup races
The fastest 17 men, 12 women and 12 doubles will qualify for participation in World Cup races.
In the absence of athletes of the seeded group, the qualified participants will be increased by this number.
- Additional starters cannot qualify for the World Cup race.

6.5.5 Participation in World Cup races

	Men (32)	Women (24)	Doubles (24)
Seeded Group	15	12	12
Qualification / NC	17	12	12

The size of the field will be adjusted only by a tie in points or placing and also in the case of the absence of athletes of the seeded group.

6.5.6 Start order for World Cup races
1st competition run:
- Last place to first place from the Qualification or NC
- Seeded group according to draw

2nd competition run:

- According to the results of the 1st competition run, last place to first place.

If there is no Nations Cup (failure), then
1st competition run:

- Last place to seeded group from current seeded list
- Athletes without World Cup points according to a draw
- Seeded group according to draw

2nd competition run:

- According to the results of the 1st competition run, last place to first place.

6.5.7 Nations Cup: Allocation of World Cup points for non-qualified athletes
Non-qualified athletes are awarded the following World Cup points:
Men: 18th place in Nations Cup = 8 World Cup points etc. according to list in § 3, 10.1
Women: 13th place in Nations Cup = 16 World Cup points etc. according to list in § 3, 10.1
Doubles: 13th place in Nations Cup = 16 World Cup points etc. according to list in § 3, 10.1
If the size of the World Cup field is adjusted (see point 6.5.5), then points awarded to Nations Cup athletes will be adjusted accordingly.

- Additional starters will not be awarded any World Cup points.

6.5.8 World Cup: Allocation of World Cup points in the case of a default
Athletes who participate in the World Cup, including seeded and athletes qualified through the Nations Cup, but who do not achieve a result because of a crash in the first or second run, or a DNS in the either run, will be awarded the amount of World Cup points which are normally given to the top ranked non-WC qualified athlete in each discipline (pt. 6.5.7).
For seeded athletes this rule (DNS) shall only be applied if the athlete starts in the final training for seeded athletes.
This rule does not apply:

- in the case of a disqualification
- for the Sprint World Cup

6.6 **Sprint World Cup** (SWC)

6.6.1 Participation The participants for the Sprint World Cup qualify by placing / ranking in the current World Cup races:

- WC Men Rank 1 - 15
- WC Women Rank 1 - 15
- WC Doubles Rank 1 - 15

If waiving or failure to start of an athlete/athlete couple, there is no moving up, only qualified athletes are allowed (WC 1 - 15) to start.

6.6.2 Competition

- The Sprint World Cup will be a one Run Race (1)
- As the final competition at WC events without Team Relay World Cup
- WC points according to IRO (§ 3, 10.1)

6.6.3 Competition format

a) Starting order: After placement / qualification in the World Cup race in reverse start order (Rank 15 - 1);
b) Start: original start heights (without starting gate) with a shortened measurement path Start - Finish (flying start);
c) The start has to be done within 20 seconds in singles and within 35 seconds in doubles after the start release;
d) Time measurement starts about 100 to 150 meters after the start ramp;
e) Finish cell (light beam) unchanged;
f) No coaches in the starting area/zone; except in the case of a technical defect
g) During the competition, only the next-starting athlete is allowed to enter the starting area;
h) the start order of the disciplines will be defined in the daily schedule;
i) All disciplines start successional; there is no track preparation between disciplines.

6.6.4 World Cup Points

- The Sprint World Cup points are incorporated consecutively into the Overall World Cup score.
- The Sprint World Cup points do not count for the current seeded list calculation.

6.6.5 Overall Standing - For the Overall Sprint World Cup Standings the end times of the

- Sprint World Cup races will be added.
- In the Overall Standings only athletes are accepted which has achieved a result in all undertaken Sprint World Cup Races.

6.6.6 The Sprint WC competitions and the resulting WC points are not included in calculating the quota places, or for any "FIL minimum requirement" for the Olympic Games.

6.7 Course of Team Relay Competition

6.7.1 Eligibility to participate

Only one Team Relay team per nation may participate in the competition (1 man, 1 woman, 1 doubles)

Athletes participating in the Team Relay competition must be qualified for the WC / NC or for the FIL championships.

- No additional starters are allowed in the Relay competition.

6.7.2 Registration/entries

- The day before the Team Relay competition, all NFs participating have to register their teams by name in writing at the latest by 5:00 p.m. or at most 10 minutes after the last competition of the day is completed, whichever comes later.
- After the registration deadline, a substitution is possible for justified reason, e.g. injury or illness of an athlete.
- Athletes who complete their competition on the same day of the Team Relay must be registered in writing with the Sport Coordinator at most 10 minutes after their competition ends.

6.7.3 Time of Team Relay competition

- The Team Relay competition is staged in one run as the event's last discipline.
- Changes of the time when the competition must be staged by the event organizer are determined by the FIL.

6.7.4 Determination of the "nations ranking" for the Team Relay World Cup

The "Team Relay nations ranking" is determined as follows:

- current World Cup point standings in the singles and doubles disciplines;
- only the best ranked athletes are determined for each NF (1 woman, 1 man, 1 doubles);
- the points of the best placed athletes of each NF are added;
- the total of points is the placing in the "Team Relay nations ranking";
- if a Team Relay competition is held on the 1st World Cup weekend the "Team Relay nations ranking" is calculated on the basis of the World Cup point standings of the previous season.

6.7.5 For determining the "nations ranking" for the Team Relay competition at FIL WCh (General Class) and OWG:

- the ranking in the three individual disciplines (women's/men's singles and doubles) in the current FIL WCh or OWG is valid;
- per NF only the best placed athletes are derived from the results: 1 woman, 1 man, 1 doubles;
- the points (§ 3, 10.1) of the best placed athletes or the respective NF are added together;
- the total determines the ranking in the Team Relay nations ranking for the FIL WCh / OWG.

6.7.6 Start order World Cup

- At the 1st Team Relay competition the start order follows the "Team Relay nations ranking" (point 6.7.4) in reversed order (last ranked to rank 1).
- After the 1st Team Relay WC, the start order is the reverse order of the current Team Relay World Cup rankings (last to first place).
- New teams/NFs start first by draw.
- Order of disciplines per team: women's singles / men's singles / doubles

6.7.7 Start order FIL WCh (General Class) JWCh and OWG

- according to the nations ranking for the Team Relay at FIL WCh and OWG (point 6.7.5.) in reverse order. In the case of a tie, the race ranking in doubles determines the placement in the nations ranking.

6.7.8 Competition schedule

- All three sleds of one team start one after the other from one start height.
- The first sled starts in a >normal< way within 30 sec; the start gate is already open. Arriving at the finish, the athlete releases the contact to open the start gate by hand at the touch pad. The time is still running.
- The second sled may start as soon as the gate opens.
- The start of the third and last starter is analogous to the start of the second one.
- Starters number 2 and 3 receive two signals (announcements / sound of a horn) indicating where the slider currently is, as an orientation to the time approximately remaining until the start.
- As soon as the third starter reaches the touch pad, the time stops and the overall time for the relay team is determined.
- Between the first and the second starter as well as between the second and the third starter a split time is kept between the opening of the start gate and the first light barrier in which the reaction time is registered.
- The start interval per team is fixed at approx. 4 minutes.
- If an athlete <u>does not</u> trigger the touch pad with his hand, that Relay team is disqualified.

6.7.9 Start order / Start preparation

- The athlete enters the start box and takes the starting position alone with his/her sled.
- Any help by a coach is prohibited (except in the case of a technical defect). It is only permitted to hand the sled over into the start area.

Start process

- The first sled starts "normally" with an open start gate (30’’ preparation)
- The second and third athlete may only start when the start gate opens, the set of Team Relay lights turns to green, and/or an acoustic signal is heard.
- In the starting position, the athlete’s sled or toe-caps may not touch or push open the start gate.
- Guidance: via the Team Relay lights, the position of the sled in the track will be acoustically and visually displayed 2 times for the athlete competing next.
- The first warning (single signal tone, Team Relay light red) on the 1st or 2nd third of the track, the second warning (double signal tone, Team Relay light changes to red/yellow) and is triggered in the 3rd third of the track.

Start area

- At each track, the start area is defined and marked by the TD.
- Coaches are not allowed within the start area.
- Walkie talkies or cell phones which assist athletes are forbidden in the immediate start area.
- During the races only those athletes starting next are allowed to enter the start area.
- Except for the start leader and the responsible FIL official/judge no other person is allowed in the start area.

False start

- If an athlete touches the start gate with their foot or runner or causes the start gate to open before the gate is opened, he causes a false start.
  The FIL official/judge who watches and supervises the start process will take note of a false start as the first authority and report it to the race director.
- The start process may be supervised with the help of a video unit. In case of a dispute, the video will be evaluated in order to identify a false start.
- A false start will result in the disqualification of the Relay Team.
- The team will complete the race regardless if a false start is called.

6.7.10 Measurements Finish touch pad:

- Diameter: 38.5 cm (measured horizontally),
- Height: 60 cm (measured vertically)
- Distance between track and touch pad: 100 cm, measured vertically from the ice Surface to the bottom edge of the touch pad.
- Distance from the start handles to the start gate: within 30 - 50 cm

6.7.11 Determination of the overall ranking

The points achieved in the Team Relay World Cup are added up for the Overall World Cup standings (IRO §3, 10.6).

6.8 **Junior World Cup** (JWC), **Youth A World Cup** (YAWC)

6.8.1 Grid Race (Junior World Cup)

In the Grid Race (1 run) the start positions for the JWC race are determined.

a) The Grid Race replaces the seventh (last) training run for the Juniors.
b) The start positions for the JWC race are awarded through the ranking in the Grid race.
c) Start order according to the current list of seeded athletes 1 - end
   - Group A 1 - 12, seeded group
   - Group B 13 - x, according to the seeded list
   - Rest group athletes without JWC points (draw at the end of the start list)
d) In the case of a tie in points, the start order is drawn.

Start numbers JWC:

a) The start number allocation for the JWC race takes place through the placement in the Grid race.
b) The athletes of group A approached the starting places 1 - 12 and the athletes of the B and the rest group starting places 13 - end.
c) The B and rest groups are considered to be a group together.
d) In the case of a crash, the athlete receives the last start number assigned to his group.
e) In the case of a disqualification, the athlete is assigned to the last grid position in the field of participants.
f) In the case of multiple defaults (DNF,DSQ), the start order of these athletes will be drawn
g) At a double World Cup, one grid race is staged for the first World Cup.
h) The starting order for the second World Cup is determined by the results of the first World Cup (1 - end).
i) Should the Grid Race not take place, the start order for the JWC in group A is drawn, group B starts according to the placement in the current overall World Cup. The rest group is drawn.
j) Start order 1st JWC, if the Grid Race does not take place:
   - Group A, - Group B, - athletes required to move up *, - rest group.

6.8.2 Junior World Cup, Start Order

1st competition run:

- Places 1 - 12, according to placing in the grid race (only Athletes from the seeded group)
- Places 13 - end, Athletes from the B and Rest group according to placing in the Grid Race

2nd competition run:

- places 32 - 1, 33 to the end, according to the standings of the 1st run

6.8.3 Regulation for athletes moving up from Youth A for the 1st JWC (this regulation only applies to the 1st JWC of every season)

Start Order Grid race

- Group A 1 - 12, seeded according to overall JWC point standings (previous year)
- Group B 13 - x, according to overall JWC point standings (previous year)
- athletes required to move up*, according to overall YAWC point standings (previous year)
- Rest Group new athletes (by draw)

(*Athletes moving up from the Youth A Class to Junior Class, changing classes)

- After the 1st JWC in the current season, all athletes without JWC points are drawn in the rest group.

6.8.4 Youth A World Cup, Start Order

1st competition run:

- Group A 1 - 12 seeded (by draw)
- Group B 13 - x according to current WC point standings
- Rest group new athletes (by draw)

2nd competition run:

- places 32 - 1, 33 to the end, of the standings of the 1st run

6.9 **Junior World Championships** (JWCh)

6.9.1. Procedure JWCh

- 6 official training runs for all athletes
- + Preliminary run for the non-seeded athletes
- + final training for the seeded athletes (1 run)

The seeded final training is held in the disciplines. Start order according to the current JWC point standings, places 1 - 12 (men, women and doubles).

6.9.2 Preliminary run:

The seeded group A does not participate in the preliminary run, all other athletes determine their start number for the 1st competition run in the preliminary run.

- Start order according to the current seeded list, best place to last place. In the event of a tie in points, the jury draws the start numbers.
- Athletes without points are drawn at the end of the starting field.
- Non-seeded athletes from the General Class who do not have any JWC points, must participate in the preliminary run.
- The start order is drawn, start number 1 - to…

6.9.3 Draw

- Seeded group A: the start order for the 1st competition run is drawn.
- Athletes from the General Class who do not have any JWC points but are currently in the seeded group in the General Class in WC, are drawn in the seeded group A. The seeded group A is increased by this number.

6.9.4 Start order JWCh:

1st competition run

- 1 - 12 seeded group A (by draw)
- 13 - end according to the standings in the preliminary run (first to last)

2nd competition run

- Men: 25 - 1 according to placing in the 1st competition run
- Women: 25 - 1 according to placing in the 1st competition run
- Doubles: 20 - 1 according to placing in the 1st competition run

6.9.5 Athletes who do not qualify for the 2nd competition run are ranked according to the standings in the 1st competition run.

6.9.6 Minimum FIL Requirement for JWCh Eligibility

Each athlete must have participated in the current season (before the JWCh) in at least two international competitions of the FIL (§ 2, 1.3) or must participate in the FIL ITW.

6.10 **Team Competition Program in the Junior Class**

6.10.1 Eligibility to participate (§ 3, 3.1 and 3.4)

- A team consists of four athletes (1 man, 1 woman, and 1 doubles).
- It is not permitted to start in two disciplines.
- Two nations which are not able to form their own team may come together to form a team.
- A NF that has one team cannot be represented with athletes in a second team.

6.10.2 Registration for the team competition

- The participating NFs must register their team in writing by 5:00 pm the day before the team competition. If the competitions the day before the team competition run later, the teams must be registered no later than 10 minutes after the last competition has ended.
- After the registration deadline, substitution is possible for justified reasons, e.g. injury or illness of an athlete.
- The registration of those athletes who complete their competition on the same day must be made in writing to the TD Juniors no later than 10 minutes after completion of the competition.

6.10.3 Additional training run

If the team competition is held before the individual disciplines, athletes who have not participated in the team competition could receive an additional training run.
The decision is made by the race director after consultation with the jury.

6.10.4 Order of nations (when the team competition is held in the disciplines)

- The order of nations will be drawn.
  - First discipline - start number 1 to end
  - Second discipline - end to start number 1
  - Third discipline - according to intermediate ranking beginning with last ranked team.
- The order of the individual disciplines is variable.

6.10.5 Start heights Team competition in Team Relay format

- If possible, all three disciplines start from the same start height in the Team Relay format (woman, man, doubles) but without the finish touch pad.
- If the equipment is available, the start is done with a start gate (reaction start).

Start order

- At the 1st Team Relay competition the start order follows the "Team Relay nations ranking" (§ 3,6.7.4) in reverse order (last ranked to rank 1).
- After the 1st Team Relay WC, (JWC) the start order is the reverse order of the current Team Relay World Cup rankings (last to first place).
- New teams/NFs start first by draw.
- The total time for the team is calculated by adding the three run times.
- Order of disciplines per team: women's singles / men's singles / doubles.
-

6.10.6 The team competition is fundamentally held as the last discipline of the event.

6.10.7 At the JWCh, the team competition (pt. 6.10.5) can be held instead of the Team Relay (§ 3, 6.7) if the relay equipment is not available.
The start order is the reverse order of the "nations ranking for the Team Relay" (§ 3, 6.7.5).

6.10.8 If a Team Relay is held at the JWCh, a free of charge Team Relay training must be held during the official training.

6.10.9 Refer to point § 3, 10.6 for the calculation of results and overall results of the team competition.

7. Cancellations, Competition Schedule

7.1 The race director is authorized in agreement with the jury and the technical delegate, to adapt the start order of the race runs to television requirements and weather conditions in order to ensure a fair race for everybody involved.

7.2 The race director can decide to cancel a discipline upon consultation with the technical delegates.

8. Authorization to participate in training

An athlete is authorized to participate in training if

a) he/she fulfills the general athletic demands of the sport and has successfully completed a FIL luge school. The confirmation is provided by the responsible FIL coach.

If in doubt, an athletics test will be carried out by the responsible FIL coach, of which the athlete must fulfill the minimum requirements.

b) he/she has not started for another nation during the respective sport year
c) a valid license is submitted
d) the age class regulations are adhered to
e) he/she has been registered for the competition in correspondence with the regulations for eligibility under (§ 3, 3)
(Exception: Athletes who do not participate in the competition, but start as forerunners).

9. Authorization to participate in competition

An athlete is authorized to participate in a competition, if

a) meets the minimum requirement for competition (FIL WCh § 3, 6.1.2), JWCh § 3, 6.9.6),
b) he/she participated in the training,
c) he/she achieved a time difference of up to a maximum of 7% from the group's best time in one of his/her official training runs in the respective group during one of their scheduled training sessions,
For Juniors / Youth A, this rule is only applied at the Junior World Championships (JWCh) and the Youth Olympic Games (YOG),
d) he/she has completed two training runs,
This rule is valid for all Junior and Youth Competitions.
e) At one event, an athlete may only start in one age group (JWC or YAWC).
Exception: In the Junior Team Competition, Youth A athletes can also start if the Youth A discipline start height is the same as the competition start height of the team competition.
f) he/she does not participate as an official in this competition.

10. Rankings

10.1 World Cup

For the results achieved in a World Cup, Nation's Cup, Team Relay, or Sprint World Cup competition, the following points per race are awarded:

Men / Women / Doubles / Team Relay

1st	Place	100	Points	15th	Place	26	Points	29th	Place	12	Points
2nd	Place	85	Points	16th	Place	25	Points	30th	Place	11	Points
3rd	Place	70	Points	17th	Place	24	Points	31st	Place	10	Points
4th	Place	60	Points	18th	Place	23	Points	32nd	Place	9	Points
5th	Place	55	Points	19th	Place	22	Points	33rd	Place	8	Points
6th	Place	50	Points	20th	Place	21	Points	34th	Place	7	Points
7th	Place	46	Points	21st	Place	20	Points	35th	Place	6	Points
8th	Place	42	Points	22nd	Place	19	Points	36th	Place	5	Points
9th	Place	39	Points	23rd	Place	18	Points	37th	Place	4	Points
10th	Place	36	Points	24th	Place	17	Points	38th	Place	3	Points
11th	Place	34	Points	25th	Place	16	Points	39th	Place	2	Points
12th	Place	32	Points	26th	Place	15	Points	40th	Place	1	Point
13th	Place	30	Points	27th	Place	14	Points	41st	Place	and continuing	
14th	Place	28	Points	28th	Place	13	Points			with 1 point each	

a) For World Cup ranking, no results can be dropped.
b) In doubles, the teams are ranked.
c) If a doubles team starts again with another athlete, this new team will be ranked separately.
d) The winner of the overall World Cup is the athlete/athlete pair with the most points from the WC + SWC.

e) The winner of the Team Relay overall World Cup is the team with the most points.
f) Ties are awarded the same rank.
g) Athletes/Team Relays/Teams that are listed as a DNS for a specific event will not be recorded in the rankings for that event.
h) Athletes/Team Relays/Teams that are listed as a DNF or DSQ for a specific event will be shown in the rankings as either DNF or DSQ as the case may be.

Nations Ranking
For the nations ranking, the points of all athletes from a National Federation are added according to the overall World Cup ranking.

10.2 **Junior World Cup**
- Ranking like World Cup.

10.3 **Youth A World Cup**
- Ranking like World Cup.

10.4 **Nations Cup**
- Ranking like World Cup,
- Allocation of World Cup points refer to § 3, 6.5.7

10.5 **Three-Tracks Tournament (Dreibahnen-Tournee)**
- Ranking like World Cup.

10.6 **Team Relay Competition / Team Competition Juniors**
- The results of the Team Relay competition / team competition are based on the total cumulative time of the three sleds.
- Overall rankings of nations will be made at the end of all competitions.
- The points will be allocated according to the World Cup rankings.
- Should there be a tie between two or more teams, the times from all competitions will be added and ranked accordingly.

§ 4 Race Administration, Jury, Technical Delegate, International Judge

1. Race Administration

The race administration includes the race director, start leader, finish leader, and chief of track.

1.1 **Race Director**

1.1.1 The race director is fully responsible for the staging of the competition.

1.1.2 For training and competition, the race director declares the track open, if

- the confirmation by the chief of track and the technical delegates has been submitted,
- all officials have taken their posts and the technical equipment has been found to be in working order after examination and/or testing,
- the facilities for the communication are available and at least the phone connection between start and finish is in working order,
- the medical service is available.

1.1.3 If the jury or the technical delegates detect deficiencies which influence the orderly staging of the event, the race director has to have the deficiencies remedied.

1.1.4 If accidents occur or if the technical equipment fails, the race director closes the track until proper continuation of the event is guaranteed.

1.1.5 The race director has the right to refer an athlete to the race doctor for a medical assessment if this athlete is injured or ill or if for any other reason, his/her start involves a specific risk to his/her health or life.
If the race doctor confirms a specific risk to the health or life of the athlete in writing, the race director is entitled to withdraw the permission to start in official training and/or competition from an athlete (§ 6, 2).

1.1.6 The race director must inform the chairperson of the jury and the technical delegates of all incidents.

1.1.7 In case of violations against the IRO, the race director will make the initial necessary decisions.
He/she is obligated to personally convince himself/herself of the offence.
Items or corresponding pieces of evidence for a possible disqualification must be submitted to him/her by the judges, jury and respective technical delegate (§ 11, 1.2).

1.1.8 The race director has the right, after consultation with the Technical Delegate, to bar an athlete from the training / competition if he/she cannot meet the demands of the track.

1.2 **Start Leader**

1.2.1 The start leader is responsible for overall supervision of the start area.
He/she is in charge of testing and weighing the sled and equipment of the athletes and is to supervise the start process.

1.2.2 The start leader shall immediately notify the race director of any infraction of the rules.

1.2.3 The start leader must be in command of the technical terms in English or German.

1.3 **Finish Leader**

1.3.1 The finish leader is responsible for coordinating all activities including the staging of the competition at the finish area as well as for the proper running of timing and controls at the finish.

1.3.2 The finish leader shall immediately notify the race director of any infraction of the rules.

1.3.3 The finish leader must be in command of the technical terms in English or German.

1.4 **Chief of Track**

1.4.1 The chief of track is responsible for flawless maintenance of the track during training and competition.
He hands over the track to the technical delegate.

1.4.2 He/she must immediately report reasons against use of the track to the race director.

1.4.3 The chief of track has to take care that the ice temperature during a competition run is kept constant by at least - 3° Celsius in the shade.
The technical delegate has to be informed about any changes of the ice temperature due to regulation in the refrigeration plant.
The ice temperature has to be visibly displayed within the start area.

2. Jury

2.1 Appointment

2.1.1 The members of the jury for the OWG / YOG, FIL World Championships (General Class), and Junior World Championships will be proposed by the Sport Commission. The Executive Board will make the final decision.

2.1.2 The proposed candidates must be members of a National Federation or a Commission of the FIL (Technical or Sport) and must have an International Judge License.

2.1.3 When staging an international competition, the authorized National Federation proposes three candidates to the FIL Executive Board.

2.1.4 The decision on the appointment to the jury will be confirmed in writing to the National Federation, the event organizer, and the nominated judges.

2.2 Composition

2.2.1 The jury includes the chairperson and two additional members.

2.2.2. At all FIL competitions, the 3 members of the jury must belong to different National Federations.

2.3 Duties

2.3.1 The jury is the highest authority present. In accordance with the IRO, it is charged with decision making power for the duration of a competition.

2.3.2 Members of the jury are not permitted to assume a technical function or a race official's position during an event.

2.3.3 Along with their supervisory duties, the jury makes a decision on all written protests with a simple majority vote.

2.3.4 Each member of the jury has access without prior notice to all technical equipment and facilities which are necessary for the staging of an event.

2.3.5. The jury must be available from the beginning of training. During Junior World Cups, the jury should be available for the last training, however they must be available for the draw at the latest.

2.3.6 If a jury member is not able to participate, the remaining jury members and the chairperson of the organization of the competition decide upon the assignment of a new jury member.

2.3.7 The Sports Director has to completely fill out the race report and mail it according to the distribution code.

3. Technical Delegate

3.1 Appointment

3.1.1 Three technical delegates will be proposed by the Technical Commission for the OWG / YOG and FIL Championships (WM, EM, JWM). The Executive Board will make the final decision.

3.1.2 For all other FIL competitions (WC, JWC, YAWC), the FIL Executive Board will appoint **one** permanent technical delegate of the FIL.
The organizing NF will appoint two additional technical delegates. These technical delegates will be responsible for individual tasks given to them by the permanent technical delegate, and they shall be available to the permanent technical delegate in an assisting function.

3.2 Composition

3.2.1 The technical delegates are representatives of the FIL.
They provide assistance to the event organizers through their expertise and via their supervisory and inspection duties, ensure technical observance of the IRO.

3.2.2 The technical delegates have to own an International Judge License.

3.2.3 The FIL always provides a full-time technical delegate at all competitions (FIL Championships, WC, JWC/YAWC). This technical delegate may not work for any other National Federation while performing his/her duties during training and competitions.

3.2.4 Technical delegates at OWG and FIL Championships must be members of the FIL Executive Board or Expert Commissions. One of the technical delegates should be a member of the FIL Technical Commission.

3.3 **Duties**

3.3.1 The technical delegate has access without prior notice to all technical facilities and equipment necessary for the staging of an event.

3.3.2 During the days of training, the technical delegates, in agreement with the race director, must grant the National Federations the opportunity to have their sleds and equipment examined.

3.3.3 Before each training and competition run, the technical delegates must inspect the track and the facilities and will transfer the track to the race director only when the inspection has justified it and when the chief of track has handed the track over to the technical delegate.

3.3.4 The jury or the race director is to seek the expert opinion of the technical delegate about various decisions, protests and so forth (§ 11, 1.2).

4. Combined Task of the Jury and Technical Delegates

Before all competitions, the race director, the chairperson of the jury, and the technical delegates have to determine the action plan for the jury and the technical delegates.

5. International Judge

5.1 Only judges possessing an FIL International Judge License may serve in a position of race leadership in FIL competitions.

5.2 International judges must officiate a minimum of one competition each sport year and attend repetitive training provided by the National Federations or the FIL once every two years, pertaining to changes in the IRO, to remain active.

5.3 International judges who have not officiated a competition or attended repetitive training pertaining to IRO changes for a period of five years will be withdrawn as an international judge and must re-acquire the International Judge License.

5.4 The National Federations must provide instruction for judges who wish to acquire the International Judge License or remain active.

5.5 National Federations which have no internationally approved judges to carry out FIL competitions must request international judges from the FIL for these competitions.
According to the FIL travel cost reimbursement plan, compensation is to be paid by the NF staging the competition.

§ 5 Sled, Equipment and controls

1. General Regulations on the Sled

1.1 The primary components of the sled are:

- 2 Runners
- 2 Steels
- Sling seat or pod seat
- 2 Bridges

Steering must result from the function of the above mentioned sled components.
On a doubles sled, steering may be supplemented by foot supports for the person on the back.

1.2 The weights including attached accessories are:

Sled	Minimum	Maximum	Basis for calculation
Singles	21 kg	25 kg	23 kg
Doubles	25 kg	30 kg	27 kg
Youth Sled B		16 kg	
Youth Sled		14 kg	
Youth Doubles		24 kg	

a) Increased weight of the sled (> 23 kg or > 27 kg) must be subtracted from the AW (additional weight) or RC (race clothing).

b) Athletes belonging to the Youth Class B who are starting in the Youth Class A with a 14 kg youth sled (in singles) or with a 16 kg youth B sled and/or a 24 kg youth sled (in doubles) may not adjust the missing weight on the sled through additional weight.

1.3 **Sled measurements**

1.3.1 Singles pod

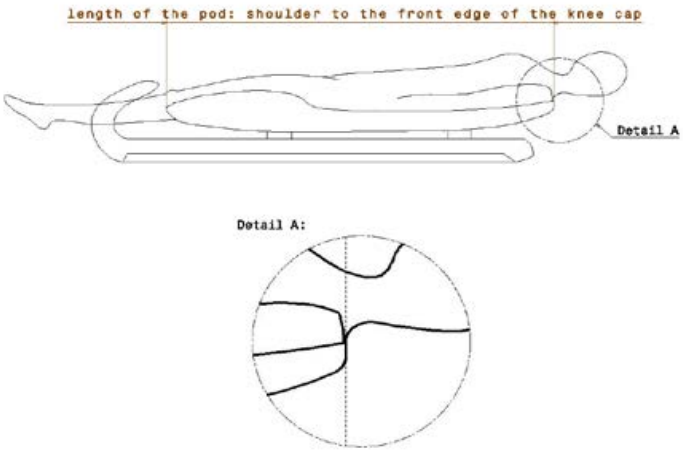

- The pod may not extend past the shoulders in the back and not past the front edge of the athlete's knee cap in the front.

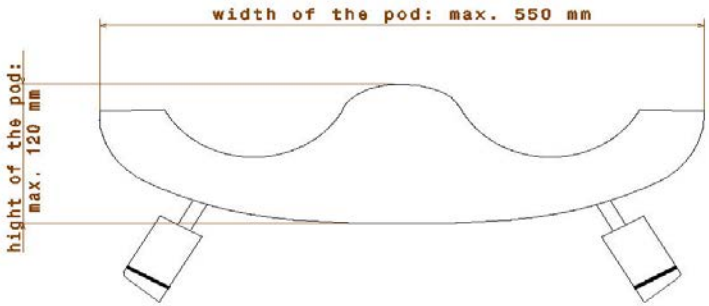

1.3.2 Doubles pod

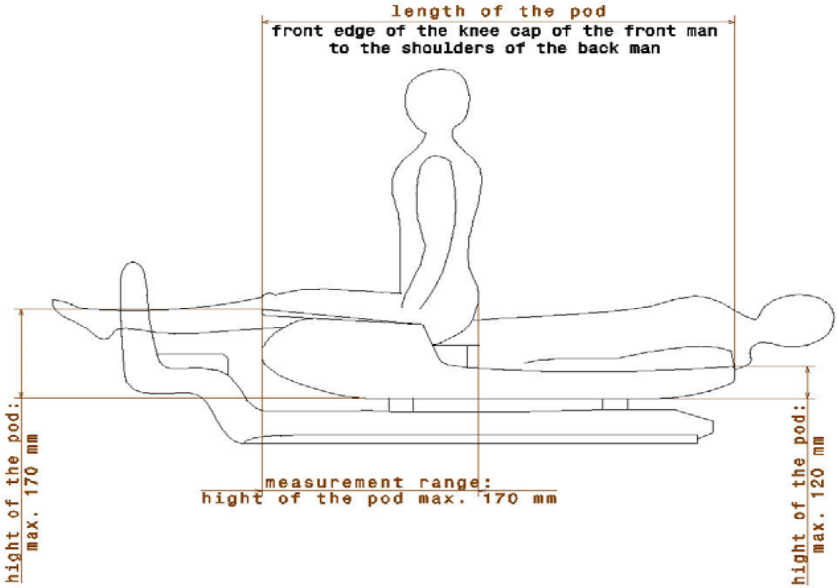

a) For doubles, the front edge of the knee caps of the front man and the shoulders of the back man are the decisive measuring points.

b) The sitting position of the doubles athletes has to be one behind the other.

c) The length of terraced seat can reach to the end of the buttocks of the front man at the most.

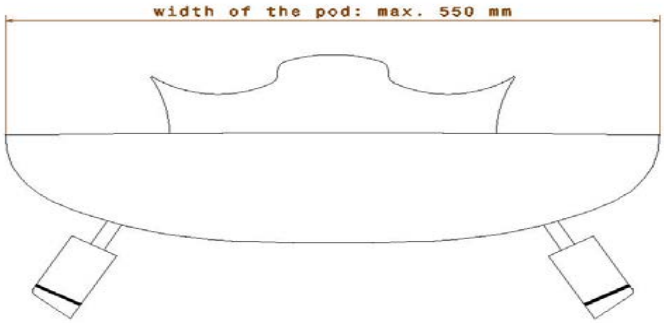

1.3.3 Runner

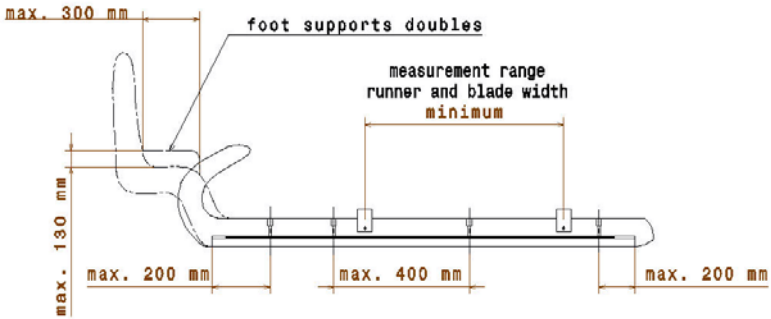

a) The foot supports for the back man of the doubles sled must not be longer than 300 mm. The allowed height of the runner in that area is not allowed to exceed 130 mm (sketch 1a). The width of the runner is not allowed to exceed 50 mm.

b) The first and last screw/bolt mounting the steel to the runner must be within 200 mm from the beginning and the end of the steel.

c) The mounting screws/bolts may not be further than 400 mm apart.

d) The runner must be at least 25 mm wide from the area of the middle of the rear bridge to the middle of the forward bridge.

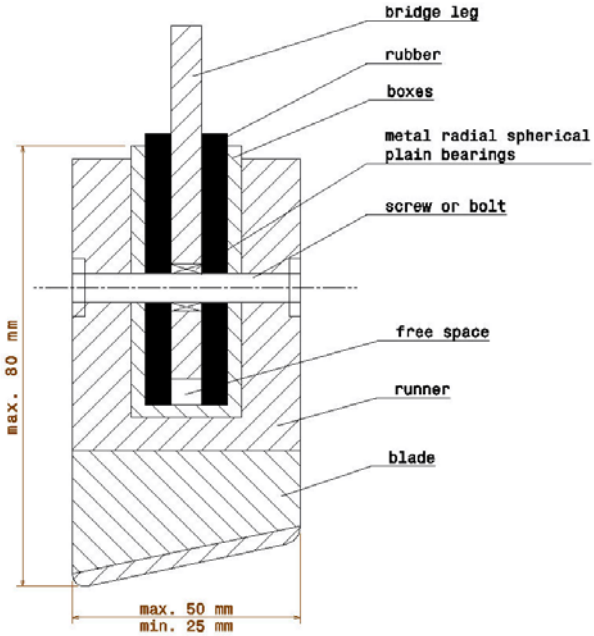

a) The dimensions of the runner plus blade must not exceed 50 mm in width and 80 mm in height.
b) The weight of the upper-part of the sled (bridges with pod seat) must be connected all the way through on each leg of the bridge with a screw or a bolt.
c) The mobility of the four bridge legs in the area of the screws or bolts is allowed by using a radial spherical bearing and/or a through-hole.
d) The rubber inserts which cover the leg of the bridge must be open on the bottom so that the stipulated free space is given
e) Any use of rubber and springs in this area with the exception of the rubber insert which covers the bridge leg is prohibited.

1.3.4 Bridges

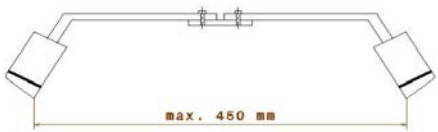

a) The bridge consists of two or more parts for the purpose of alignment. These must be securely fixed by screws or bolts and may not be adjusted or changed during a run.
b) The weight of the upper-part of the sled (bridges with pod seat) must be connected all the way through on each leg of the bridge with a screw or a bolt.
c) The mobility of the four bridge legs in the area of the screws or bolts is allowed by using a radial spherical bearing and/or a through-hole
d) Any use of rubber and springs in this area with the exception of the connection between bridges and seat pod and the rubber insert which covers the bridge leg is prohibited.

1.3.5 Steels

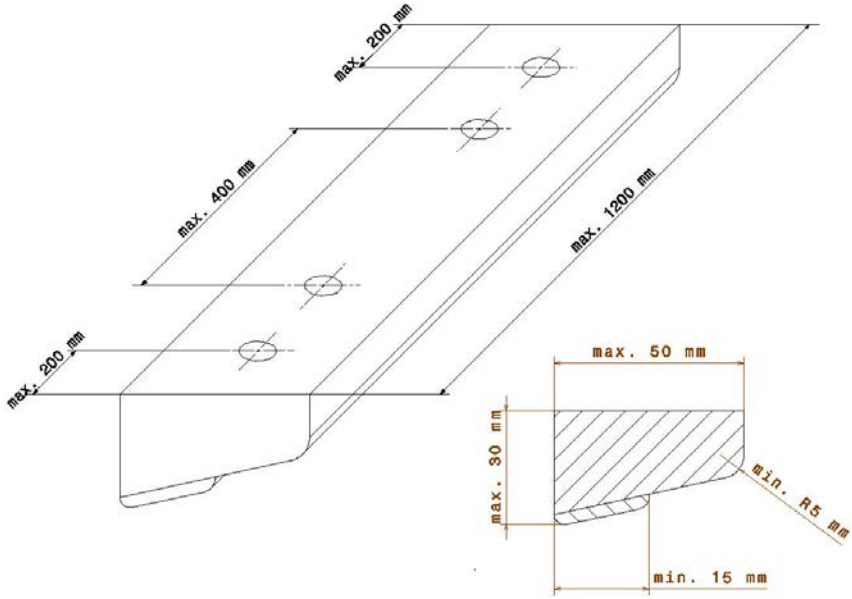

a) The steel must be screwed/bolted to the runner by at least 4 screws/bolts.
b) The steels can be comprised of one or several parts. If the steel comprises several parts, then these parts must be bonded, welded, or riveted form- fittingly and securely together to form one piece.
c) The steels may be drilled or milled lengthwise, however a margin must remain
d) The steel may not be cut crosswise.
e) Guide pins and/or guide rails for stabilizing the steel are not allowed.
f) In the interest of safety, the outer edges of the blades including the laminate must be rounded or sloped to a radius of at least 5 mm

1.3.6 Gap measurement runner / steel

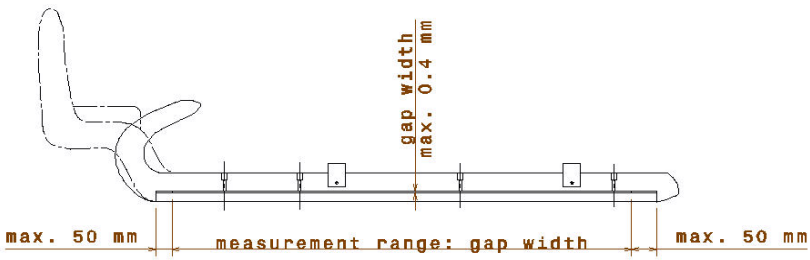

- The gaps between the runner and the steel may measure up to 0, 4 mm.
- The area (connection) between runner and steel is not allowed to be covered - only 5 cm at the front and at the back end of the steels.

1.3.7 Inlay to change the angle of the steel

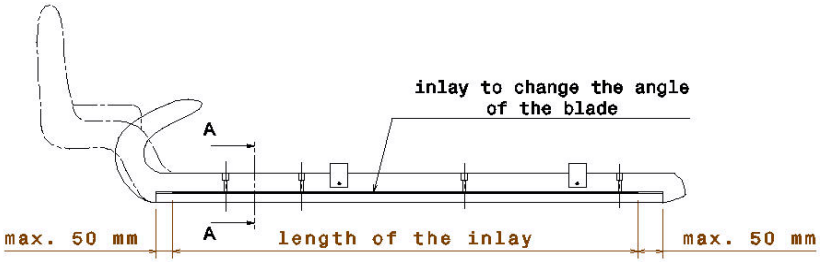

Section A-A:

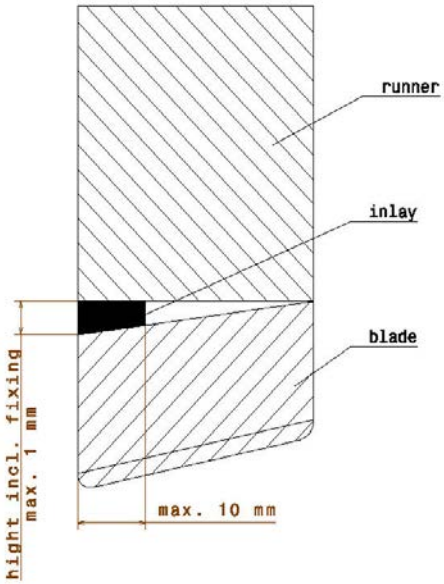

a) Between the runner and the steel, only a continuous inlay, 1mm thick and 10 mm wide, to change the angle of the steel is permitted. The beginning and end of the inlay must be no longer than 5 cm measured from the beginning and the end of the steel.

b) Inlays may be fixed with double-sided adhesive tape, but may not exceed 1mm with the adhesive tape.

1.3.8 Connection runner, steel (steel screws/bolts, steel-screws/bolts-connector)

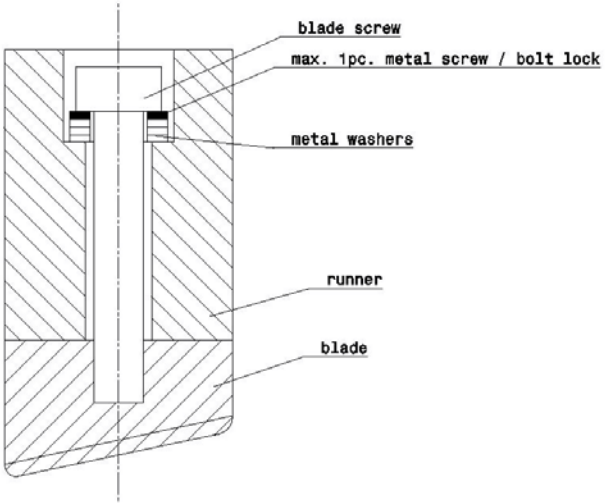

- All metal washers are allowed
- A maximum of 1 metal screw/bolt lock is allowed
- Any use of additional rubber or springs in this area is prohibited

2. General Regulations on Equipment

a) All items of race clothing, including helmet and luge shoes, must conform to or be adapted to the body contours of the competitor.
b) Aerodynamically formed connections between the head and upper body are not permitted.
c) A neck strap is permitted; however, it may not lead to (or cause) an aerodynamically improved form of the race clothing.
d) Additional protective equipment (pad(s)) must conform to the competitor's body contour and is permitted to be a maximum of 10 mm in thickness.
e) Under no circumstances may additional weight be attached to the sled.
f) Additional weight must be carried on the body on the torso and/or thigh and must not be able to shift freely. It should be attached and distributed in such a manner that bruises or other injuries will not occur.
g) Additional weight, including fixings and body protection, may not exceed a maximum thickness of 20 mm except
h) On the back of the competitor where it can be 30 mm thick in an area which is 25 cm wide and centered on the axis of the body.
i) Each competitor must use proper race clothing in training and competition.

2. 1 **Gloves**

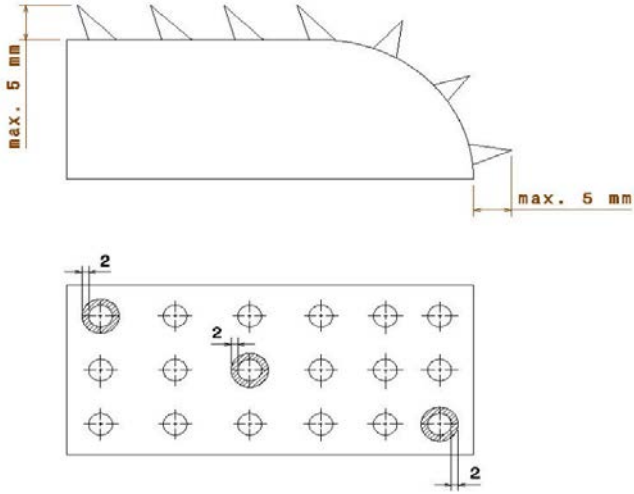

- The effective length of the spikes of the gloves: maximum 5 mm, measured in the axis.
- The fastening of individual spikes must guarantee that each spike must have an edge of at least 2 mm on three sides

2.2 **Safety Helmet**

Wearing a safety helmet according to the FIL guidelines for safety helmets is mandatory.

2.3 **Luge shoes, training/competition**

Wearing luge shoes according to the FIL guidelines for luge shoes is mandatory at FIL competitions.

2.4 **Race Suit**

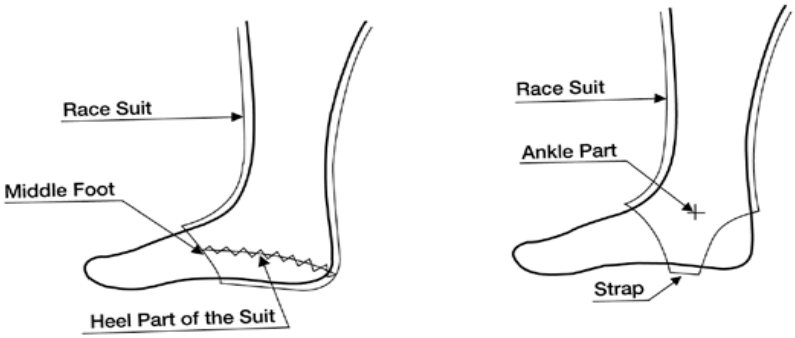

a) It is mandatory to wear a race suit.
b) For racing suits, only textile fabrics may be used, the exterior surface of which must not be plasticized or otherwise sealed.
c) It has to be possible for each National Federation to buy the racing suit material or finished racing suits from all the respective manufacturers.
d) The race suit has to end in the middle of the foot.
e) If the race suit is fastened up over the heel, then the heel has to be a part of the suit.
f) If the race suit ends in the ankle-part, it must have a strap.
g) It is forbidden to tape the race suit to the foot or with the socks.
h) Bootie covers are forbidden.

2.5 **Start Numbers**

a) During FIL competitions, bibs provided by the FIL and the organizer are to be used for start numbers.
b) The start number has to appear on the chest and on the back.
c) The Executive Board and/or the event organizer can stipulate a second start number (for example: sticker).
d) Start number bibs must be elastic, sleeveless, and adhere closely to the upper body. They must not be changed
e) Start number bibs must not be taped at the bottom edge; they may only be fastened at the height of the hip bone using two snap fasteners.
f) Taping of the start number bibs at the bottom edge with a maximum width of 6 cm is only allowed in the youth and junior classes
g) Tucking in the start number bibs at the sides and shoulders is only permitted if by doing so neither the number nor the inscriptions are affected.
h) It is forbidden to bind the shoulder straps together at the back.
i) With doubles, both athletes have to wear a start number bib.

- For Junior/Youth A World Cups and other international races for Junior and Youth classes, the event organizer may also use start number stickers if the quantity of bibs or the sizes are not available.
  This is not applicable to the Junior World Championships.

3. Inspection of the sled and race equipment

a) All inspections of the sled must be carried out with appropriate expenditure of force and without excess use of force. The inspections must not lead to any damage to the sled.
b) Checking the sled dimensions is done in a right angle to-the vertical and horizontal middle axis of the component being inspected.
c) During the measuring process, the sled must be lying on the table on its own without the support of an official.
d) Positions for inspecting the length of the sled pod:

Singles	supine
Doubles front man	sitting, knees extended, belt on
Doubles back man	supine

e) At the first World Cup event of every season, all sleds are to be presented to the TD for the measuring of the pod. In the event of a positive evaluation, on official FIL sticker is put onto the sled.
f) If an athlete makes changes to the pod during the season or enters the World Cup series at a later date, he has the weekly opportunity to present the sled for technical pre-inspection.
g) The pressure is measured by the TD with a mechanical device on the runner/steel, runner, bridge connector, and the steel-screw/bolt-connector and spots freely chosen.
h) The Executive Board annually decides on the pressure (Nm) to be used on the inspection device and the resulting maximum measurement value.

i) The inlay between runner and steel is measured using a digital sliding caliper adjusted to 1.1 mm. Inserts that can be moved freely through the sliding caliper are classified as conforming to the rules.
j) The exchange of, or modifications to, the sled during a discipline are permitted in accordance with the rules.
k) The results of the inspections are to be noted in the official records.

3.1 **Inspection at the start**

- After the beginning of the official measurement, the sled must not be removed from the designated start area. This also pertains if there is a delay in starting.
- After inspection in the start area to the inspections at the finish, the sled must neither be exchanged nor the blades warmed.
- Every sled preparation to improve the gliding process is not allowed after the official inspections at the start.

3.1.1 Temperature of the steels

a) An official temperature check of the steels, using an approved digital device with a measuring accuracy of 1/10 degree, is to be conducted by the official involved with steel measurement between the call to start and start preparation.
b) Results are to be entered in the official records in 1/10 degrees.
c) The temperature of the steels will be taken in four locations: The temperature of one steel will be measured at the rear bridge attachment, and of the opposing steel at the front bridge attachment. The temperature of each steel will also be measured once each at a random location between the bridge attachments.
d) At the start, a control blade 50 cm long, corresponding to the profile of a blade, is to be set up as permanent equipment attached in a location sheltered from the sun, and is to be used as a basis for temperature measurement.
The control steel may not be placed in an exposed area and must be protected from drafts.
e) The temperature of the control blade is to be taken 30 minutes before the start and is to be repeated every 15 minutes from that time.
f) The results of these temperature checks are to be posted in 1/10 degrees on a notice board that is visible to everyone.
g) The temperature of the steels on each athlete's sled may not be greater than 5°C above the control temperature. The control temperature is established from the control steel located at a height of 1/2 to 1 meter from the ground. Should the temperature of the control steel fall below negative 4°C, the steel temperature may continue to be 1°C.
h) For measuring the temperature at the start and finish, three official identical temperature gauges including sensors are to be made available.
i) At the start, one gauge is used by the judge for the official measurements, one gauge is available for control measurements.
j) Official measurement and control measurement should be recognizable as such without any doubt and both gauges are to be marked differently.
k) The first gauge is used in the start room for the official measuring. Only two sleds at a time can be brought up for the official measuring. Each sled will only be measured once appropriately.
l) The second gauge is used for control measurements.
m) The third gauge is available at the finish for control measurements.
n) All gauges may only be used by the judge assigned to it and may not be given to someone else.
o) The temperature of the steels of the forerunners is also checked. If the temperature is too high she/she may not start if blades are too warm.

3.1.2 Weight checks of athlete and sled

a) Every athlete steps on the scale at the start with his sled (in the case of doubles, one athlete with the sled, the other athlete without the sled (§ 8, 4.1).The sum of the body weight, weight of the race clothing and additional weight is not to be exceeded.
b) The weighing procedure at the start will be supervised by a technical delegate.

c) The scale must reflect incremental units of 100 g.
d) A gauged scale must be installed for the pre-competition weigh-in for the athletes under supervision of a judge both at the start (women's, men's, and doubles' starts) and at the finish. These scales must be placed at the disposal of the athletes 1 ½ hours before the beginning of the race. .
e) Control weights (5 x 20 kg) must be available for calibrating the scales (start, finish, changing room).
f) At the Winter Olympic Games and FIL Championships, scales must be set up under the same prerequisites in both start areas.
g) At junior/youth races, the sled and athlete-weigh checks can-be carried out at the finish for organizational reasons).

3.1.3. The cavities/gap measurements between runner and steel

- The sled is inspected in a reclined position. Touching, lifting, or pressing the steels is not permitted.
- If the judge can insert the distance gauge 0.5mm into the empty space (gap) up to half of the width of the steel, this is reported to the TD and this sled is inspected by the TD in the finish area.
- If the distance gauge (0.5mm) is able to clear the empty space over the entire width of the steel, then this results in a violation.

3.1.4 Start Numbers

- The start number is to be checked visually.

3.1.5 Race equipment

- The race equipment is to be checked visually.
- If the zipper of a race shoe breaks after the official controls at the start, the race shoes may be exchanged. The athlete, however, must start within the given start period - no extra time is granted. The change must be reported to the TD in order for it to be inspected at the finish.

3.2 **Inspections at the finish**

3.2.1 Drawing the athlete to be inspected

- At the finish, every athlete must activate the random generation or draw a ball under the supervision of a jury member or Technical Delegate.
- For doubles, only one athlete activates the random generator (draws a ball); however both athletes must go to the inspection with the sled.

World Cup Singles	1st Run	2x RED, 1x RED/BLU from the seeded group 3x RED from the remaining competitors
	2nd Run	BLU from the 1st run 1 Sled from the 1st - 3rd placed athletes (BLU)
World Cup Doubles	1st Run	2x RED, 1x RED/BLU from all competitors
	2nd Run	BLU from the 1st run 1 Sled from the 1st - 3rd placed athletes (BLAU)
World Cup Team Relay	1 Run	2x RED, 1x RED/BLU from all competitors
Sprint WC M/W/D	1 Run	2x RED, 1x RED/BLU from all competitors

Championships, OWG Singles	1st Run and 3rd Run	2x RED, 1x RED/BLU from the seeded group 3x RED from the remaining competitors

	2nd Run and 4th Run	Steel temperature of the best 10 Athlete pairs in the 1st or 3rd Run BLU from the 1st or 3rd Run 1st -3rd placed athletes in the 2nd or 4th Run (BLU)
Championships, OWG Doubles	1st Run	2x RED, 1x RED/BLU from all competitors
	2nd Run	Steel temperature of the best 10 athlete pairs in the 1st Run BLU from the 1st Run 1st -3rd placed athletes (BLU)
Championships Team Relay	1 Run	2x RED, 1x RED/BLU from all competitors 1 Sled from 1st -3rd placed athletes (BLU)
Sprint Championships M/W/D	1 Run	2x RED, 1x RED/BLU from all competitors 1st-3rd placed athletes (BLU)

a) After the first run, the sled of the athlete who has drawn the RED/BLU lot will be marked by the TD and inspected after the 2nd run for compliance with § 5.
b) If in the second or fourth run, this athlete uses another sled than in the first or third run, he or she must also present the marked sled from his or her first or third run, so that it can be inspected.
c) At junior competitions, the inspections will be carried out as in the general class.
d) At Youth A competitions, the inspections will be carried out randomly.
e) The inspection of the sled and equipment can be carried out randomly on further athletes at by order of the technical delegate
f) The type and extent of the drawn and additional inspections are subject to the judgment of the TD.

3.2.2. <u>Inspections RED</u>

- Temperature of the steels
- Weight checks
- Sled measurements
- Inspection of equipment

3.2.3. <u>Inspections BLUE</u>

- Pressure measurement
  - Runner/steel
  - Runner
  - Bridge – connector
  - Steel screw/bolt – connector without screw/bolt lock
- Inlay to change the angle of the steel
- Bridges
- Steels
- Runners

§ 6 Medical Service

1. General Regulations

During official training of the competition and race runs of any FIL competition, and International Training Week for the FIL World Championships general class, the following must be available:

a) A race physician with knowledge of emergency care.
During official training, the presence of a race physician may only be dismissed according to point 1.1a when a time frame for the emergency aid has been legally determined for the particular nation hosting an event and when its compliance is guaranteed.

b) A minimum of one ambulance with one paramedic / ambulance officer.
The ambulance must also be equipped with appropriate resuscitation equipment and be suitable/ capable of accessing all roads around and along the track; it must be placed in such a way that, in accordance with the local conditions, a fast pick up of the ill or injured athlete is possible from all areas of the track.

c) A room exclusively used for first-aid treatment which is marked as such.

Should the race physician and/or the ambulance be medically required, the race or official training must be interrupted until their services according to the above-mentioned regulations are again guaranteed.

2. Responsibilities

The race physician and/or the ambulance crew are responsible for the primary care of injuries and illnesses of the athletes.
The race doctor has to certify in writing to the race director when there is a specific risk to life or health by the participation of an athlete as a result of an injury or illness or for any other medical reason (§ 4, 1.1.5).

3. Evacuation of injured athletes

The event organizers must guarantee that injured persons can be transported away from any point along the entire length of the track without obstruction or difficulties.

§ 7 Advertising Regulations

1. Applicability, Measuring Procedure

1.1 **Applicability**

All these regulations are valid during FIL competitions as well as for media and PR activities and are applicable to athletes and officials.

1.2 **Measuring Procedure**

a) The size of a commercial marking or trademark is the surface within a line following the actual surrounding of the integrated marking.
b) If the trademark is integrated within an area of different color, the total area of the different color is to be measured.
c) The correctness of the measuring of the size of the trademark will be under the responsibility of the National Federations.
d) At FIL competitions, the race director, technical delegates and jury have the right to carry out control measurements at any time.

2. Race Clothing

a) Articles of clothing may carry manufacturers' identifications and/or trademarks of other sponsors.
b) The total surface of the trademarks together on the clothing (except head coverings, gloves and shoes) of one person shall not exceed 450 sq cm.
c) The complete surface can be divided into ten parts at the most.
d) The complete surface of a single part may not exceed 100 sq cm.
e) Trademarks of the same sponsor may not appear one above the other or one beside the other.
f) The markings on the clothing will be measured when the clothing is not worn.
g) The respective National Federation is responsible for maintaining the advertising regulations.
h) The use of a manufacturer's specific graphic design - even though this design may also be registered - will not be counted as advertising spaces.

3. Safety Helmet

- Athletes' safety helmets may display two (2) trademarks of the manufacturer with a maximum size of 15 sq cm, one each side, placed over the ears.
- The advertising surface on the front of helmets may only be used by the FIL (60 sq cm).
- It is permitted to wear a national emblem on the helmet (max. 30 sq cm) and also the name of the athlete (maximum twice, height of the writing maximum each 15 mm) at the back of the helmet without obstructing the official FIL advertising.

4. Visor

- Visor straps have to conform to commercially available products.
- The width of the visor strap is limited to 4 cm.

5. Caps, Headbands, and other Headgear

Caps, headbands, and other headgear may each have a maximum of three (3) trademarks of the manufacturer and/or other sponsors, with a total surface of 90 sq cm maximum.

6. Start Numbers

- Advertising inscriptions on start numbers are permitted.
- The advertising surface must be smaller than the section bearing the start number.
- During FIL Championships and World Cups of the General Class, the start number bibs provided by the FIL sponsor have to be worn during the official training.

7. Luge Shoe

- Luge shoes may only show one manufacturer’s trademark of 15 sq cm in size on each shoe.
- The trademarks can be divided in two parts.

8. Gloves

- Gloves may only show one manufacturer’s trademark on each glove.
- The marking can be divided into two parts.
- The total surface of the commercial marking per glove is limited to 15 sq cm.

9. Racing Sled

- On the entire sled, in addition to the manufacturer's trademark, a maximum of six commercial markings may be displayed; maximum of three trademarks on the bottom of the sled.
- The size of the advertising surface on the bottom of the sled may not exceed 900 sq cm.

10. Athlete

Advertising with athletes is only allowed with permission of the National Federation responsible. Name, title, and picture of the athletes can only be used once for each advertisement.

11. Forbidden Advertisement

Provided there are no stricter national laws, following advertisement is prohibited:

1. on the athlete and sled: advertising for tobacco, illegal drugs or alcohol.
   Exception: advertising for non-alcoholic beer and, regarding athletes of age (18), advertising for products with an alcohol percentage of less than 10 %.

2. at the sports venue and on bibs: advertising for tobacco, illegal drugs or products with an alcohol percentage of more than 10 %. The FIL Executive Board can allow an exception of this prohibition following a request from the event organizer or the venue operator.

3. advertising conveying religious, racial or any other discrimination.

§ 8 Training, Weigh-in, Individual Supplemental Weights

1. International Training Courses

1.1 The NF that is holding a FIL World Championship (General Class) or Junior World Championship must provide an International Training Week before the staging of the championship in the respective season.
At least 6 training days with a minimum of 4 training runs daily have to be offered to all interested National Federations.
If the organizers do not adhere to this requirement, the Executive Board can reject the next application for an event.

1.2 Organizers hosting a FIL World Cup or Junior/Youth A World Cup must make available three (3) days of paid training (five (5) days for juniors/Youth A) to all teams prior to the event in that season. These days must be scheduled during the pre-season / preparation period and cannot be scheduled during the normal event paid training and official training schedule immediately prior to the event. A minimum of four (4) training runs each day must be offered.

1.3 The execution of international training sessions is strictly a matter of the National Federation (with exception of the OWG/YOG). The terms of these training sessions are to be set up by mutual agreement and under their own responsibility.

2. Paid Training

2.1 Two days before the beginning of official training, organizers of FIL World Championships (General Class) and Junior World Championships are obligated to offer paid training.
- The track must be prepared before each group's training.
- Paid training is to be coordinated and supervised by the Sports Director/technical delegate.
- National Federations have to register for the paid training one week prior to the beginning of that training.

Junior/Youth A World Cup:
- At least one day with a training session of at least three runs must be offered before the official Training.

2.2 If it is known in advance that there is not enough time for this paid training (as in the case of the "Drei-Bahnen-Tournee") then the organizers of the FIL competition must provide a minimum of 3 training days.
This training must take place prior to the competition during a week when there is no World Cup or championship race scheduled.

3. Official Training

3.1 Systematic Training

3.1.1 A training run on a shortened course (systematic training) has to be offered for singles and doubles.
3.1.2 If an athlete / doubles team does not take a systematic training run, he or she will be removed from that training run without substitution.
3.1.3 If the event organizer provides more than 3 training runs of paid training, there is no obligation to provide systematic training.

3.2 Official Training Runs

3.2.1 For FIL competitions, the organizers must hold free of charge at least five (5) training runs for singles and five (5) training runs for doubles.
These training runs should include one (1) night run if there is to be a night run in the competition. These runs are to be timed and are to be conducted on the entire length of the course.

3.2.2 During Junior/Youth A World Cups and Junior World Championships, seven (7) official training runs have to be provided free of charge.

3.2.3 The start order for the NFs for training will be drawn at the first team captain's meeting.
Before the draw, it will be determined by the race director which nation in the drawn start order will begin the respective training run.

3.2.4 Two full days will be made available for official training by the organizers.
There are no exceptions.

3.2.5 Reduction of the number of training runs
If conditions prevail which make it impossible for the competitors to complete their stipulated training runs, i.e. warm wind, snowfall, etc., the race director in discussion with the technical delegates can interrupt training and set up a new training time.
Regarding the number and completion of training runs, the race director will make a decision after conferring with the technical delegates.

3.2.6 Only the competitors eligible to participate in the respective competition may take part in the training (§ 3, 8).

3.2.7 Doubles athletes may start from the men's or doubles start in singles training.

3.2.8 All unauthorized training by competitors on the track other than at the designated training times is forbidden.

3.2.9 In substantiated cases, with approval of the jury, the race director must allow competitors who have arrived late due to no fault of their own, to complete the minimum number of training runs if time allows them to do so.

3.2.10 In conjunction with the technical delegate, the race director is empowered to add additional official training runs.

3.2.11 During competitions that are held within a shorter period of time, the Sports Director in agreement with the race director makes the arrangements for training.
It is to be guaranteed that all National Federations have the same conditions.

3.2.12 If the competition's planning results in a break of two or more days for athletes, an additional training run must be made available to them**.**

3.3 Rules for World Cup training

3.3.1. Number of training runs

a) At the first World Cup of a season, all athletes are offered an equal number of training runs (at least 6 runs).
b) In addition to these 6 training runs, newcomers* to a track will receive on the first training day an extra systematic training run.
(* Newcomers are athletes that have not yet participated in a FIL competition (WC/NC/FIL championships) in the General Class in their discipline on this track. For doubles, this applies if the team in the same composition has never before participated in a doubles competition in the General Class at this track)
c) Athletes, who <u>cannot qualify</u> through the Nations Cup for the WC race, receive 9 training runs at the next WC.
An additional systematic training run for track newcomers is not granted;
d) All other registered participants for the World Cup will receive 6 training runs on two or three days of training;
e) Systematic training can be held on the first training day as part of the 6 or 9 runs offered.

3.3.2 Miscellaneous

a) The NFs must register with event organizers using the FIL online registration tool.
b) Personnel changes must be reported at the 1st Team Captains' Meeting to the race director;
c) The training is conducted in groups of approximately 23 to 28 participants.
d) The groups train in the start order Men's start – Women's start - Doubles start;
e) The track must be prepared before each group (under the responsibility of the technical delegate with the chief of track).
f) Training is scheduled and coordinated by the Sports Director.
g) The start order for training is determined by the first team captains' meeting.
h) If athletes should compete in both disciplines – men and doubles – the team captain must nominate the second training of these athletes in another group.

i) Should athletes have a break of two days in the planning between the last training run and the first race run, an additional training run must be made available these athletes.
j) Travel days are allowed for and fixed in the annual schedule.
k) Event organizers must offer 5 training runs per registered sled free of charge.
l) All other training runs are offered against payment.

3.4 At World Cup races and FIL World Championships, training partnerships train within the groups at paid training as well as during official training contiguously in the start order: Men's start – Women's start - Doubles start.

3.5 **Timing**
When the respective start level is reached, the run times are to be presented in writing through a time sheet with a start time and at least three intermediate times.

4. Weigh-In

4.1 The weigh-in (men with shorts and women T-shirts, shorts) takes place under the direction of the judge responsible for the weigh-in before the draw.
- When weighing women, a female judge must be present.
- The location and time of the weigh-in are to be announced at the first Team Captain's meeting.
- Upon confirmation of the events schedule, the FIL Executive Board, based on the proposal of the Technical Commission, will determine at which events a weigh-in will be carried out. (2 - 3 times per season).
- For new athletes or for athletes with weight changes, a weigh-in may be done every week at each competition. The result is valid for the following competitions.
- At the weigh-in, athletes competing in doubles event must notify the judges on who will be stepping on the scale with the sled during the competition.

4.2 A jury member or technical delegate must be present.

4.3 At least one heated room is to be provided by the organizers for the aforementioned weigh-in procedure.

4.4 At the draw, all participating National Federations receive a list of their athletes from the organizers on which the following weight information is noted: name, body weight, additional weight, weight of race clothing, and total weight permitted for the race.

5. Individual Supplemental Weights

5.1 Additional weights may be carried in singles' competitions for women, men, junior women and junior men, youth A women and men as well as in doubles, General Class, Junior Class, and Youth A Class.

5.1.1 The maximum amount of additional weight permitted is as follows:
- Women, Junior Women, Youth A Men 10 kg
- Men, Junior Men 13 kg
- Youth A Women 8 kg
- Doubles (General Class, Junior Class and Youth A Class) 10 kg

5.1.2 **Men** may use additional weight amounting to **100%** of the difference between body weight and a base weight of 90 kg.
5.1.3 **Women** may use additional weight amounting to **100%** of the difference between body weight and a base weight of 75 kg.
5.1.4 **Doubles athletes in General Class** may use additional weight amounting to **75%** of the difference between body weight and a base weight of 90 kg.
Additional weight is not allowed if the body weight of the front person and back person together exceeds **180 kg**.

If one of the partners weighs more than 90 kg, the weight exceeding the 90 kg mark will be added to the lighter partner.
If there should still be a difference between the partner's weight and the 90 kg mark, the difference can be compensated according to the weight table.

5.1.5 **Junior men** may use additional weight amounting to **75%** of the difference between body weight and a base weight of 90 kg.

5.1.6 **Junior women** may use additional weight amounting to **75%** of the difference between body weight and a base weight of 75 kg.

5.1.7 **Youth A men** may use additional weight amounting to **75%** of the difference between body weight and a base weight of 75 kg.

5.1.8 **Youth A women** may use additional weight amounting to **50%** of the difference between body weight and a base weight of 70 kg.

5.1.9 **Doubles athletes in Junior Class** may use additional weight amounting to **50%** of the difference between body weight and a base weight of 90 kg.
Additional weight is not allowed if the body weight of the front person and back person together exceeds **180 kg**.
If one of the partners weighs more than 90 kg, the weight exceeding the 90 kg mark will be added to the lighter partner.
If there should still be a difference between the partner's weight and the 90 kg mark, the difference can be compensated according to the weight table.

5.1.10 **Youth A doubles** athletes may use additional weight amounting to **50%** of the difference between body weight and a base weight of 75 kg.
Additional weight is not allowed if the body weight of the front person and back person together exceeds **150 kg**.
If one of the partners weighs more than 75 kg, the weight exceeding the 75 kg mark will be added to the lighter partner.
If there should still be a difference between the partner's weight and the 75 kg mark, the difference can be compensated according to the weight table.

5.1.11 The additional weight must be worn by each competitor individually. Under no circumstances may additional weight be attached to the sled.

5.1.12 The weight of the race clothing may amount to 4 kg and may be compensated for in all disciplines.

§ 9 Race Preparation

1. Entries

1.1 Each NF has to submit entries for its competitors, including additional starters, to the organizers using the FIL online registration form by the deadline appearing in the invitation to the race.

1.2 Continental Championships (Race in Race WC / JWC)
NFs which have more athletes competing than are eligible for participation in FIL Championships (§ 3 point 3), must submit the names of the athletes for the championship rankings to the race director in writing before the draw.

2. Entry Fee

Entry fees for all athletes must be paid to the official designated by the NF prior to the start of the draw who then issues a receipt.
Entry fees remain the property of the sponsoring NF.
For all FIL competitions, the amount of the entry fee for each competitor in each discipline will be determined in Euro by the FIL Executive Board.
Entry fees paid for competitors will not be refunded.

3. Draw

3.1 Time and location of the draw are stated in the invitation to the competition.

3.2 The race director is the chairperson of the draw.
- The draw takes place after completion of the training.
- The draw by name and/or NFs takes place after the announcement of the number.
- The draw by number after the announcing of the name is allowed if required due to the creation of a computerized start list.

3.3 During the draw, the jury must be present.

3.4 **FIL World Championships in General Class**

Only the start order for the seeded groups will be an open draw.
- 15 Men: 1 - 7 + 8 – 15
- 12 Women: 1 - 6 + 7 - 12
- 12 Doubles: 1 - 6 + 7 - 12

The rest of the start order will result from the preliminary run (§ 3, 6.1.1).

3.5 **World Cup**
Only the start order for the seeded groups will be an open draw.
- 15 Men: 8 - 15 + 1 - 7 (Bib Nr 18 - 24 + 25 - 32)
- 12 Women: 7 - 12 + 1 - 6 (Bib Nr 13 - 18 + 19 - 24)
- 12 Doubles: 7 - 12 + 1 - 6 (Bib Nr 13 - 18 + 19 - 24)

The rest of the start order will result from the placement of the qualification (§ 3, 6.5.6).

3.6 **Junior World Championships**
- The seeded group A (1 - 12) will be drawn by name / JWCh (§ 3, 6.9.3)
- The rest of the start order is determined by the placement in the preliminary run (§ 3, 6.9.2).

Junior World Cup
- No draw for the seeded group A
  (draw only upon a default in the Grid Race)
- The start numbers are assigned according to the placement in the Grid Race (§ 3,6.8.1)

Youth A World Cup

- The seeded group A (1 - 12) will be drawn by name.
- There is no draw for the group B. The start order results from the overall Youth A World Cup ranking (§ 3, 5.4).
- A necessary draw for athletes with the same number of points will be done by the jury.
- The remaining group will be drawn.

3.7 For the doubles, the names of the team members must be known before the draw.

3.8. Names entered for the doubles competition are binding for the duration of the discipline and may not be changed during the race.

3.9 During the draw, the times of the start order for the competition have to be announced.

3.10 The outcome of the draw (start list) and start order are to be immediately announced publicly. A copy of the start list is to be given to each team captain.

3.11 Exchanging of start numbers is not permitted.

§ 10 Start. Finish, General Rules, Timing, Results, Inspections

1. Start

1.1 **Start Rules**

- In all disciplines, starting from a start ramp is required.
- The start time and start order for the athletes are to be clearly displayed at the start and at the finish.
- The athletes are responsible for informing themselves promptly of the order and their respective start times.
- During the OWG, FIL Championships and World Cup races, 1 - 3 forerunners have to start per
- race run.
- During Junior/Youth A World Cup races, forerunners should also be available.

1.2 **Call to Start**

- The beginning of each heat must be announced over the loudspeaker system along the track 15, 10, 5, 2 and 1 minutes prior to the first starter.
- This applies to all training and competition runs of FIL competitions.
- The call to start must take place in the described countdown mode in order to ensure that all persons present at the track are reliably informed on the beginning of the runs.
- For competitions runs, the call to the start area follows the checking of the sled and athlete in the start area.
  The athlete must go to the start area within two (2) minutes of being called.
- Only one (1) person is permitted to assist a competitor in the start ramp area.

1.3 **Command to Start**

The signal to start has to be carried out acoustically and optically by a time display which is clearly visible to the athlete.

- Start signal lights and start clocks must be installed at all start heights.
- The track is closed to all athletes when the light is red. The athlete at the start may only start if the green light is visible.
- The start must take place within thirty (30) seconds after the "Track is Clear" notice for singles and within 45 seconds after the "Track is Clear" notice for doubles.
- The start is valid if the athlete has left the start handles within this time with a push and has put the sled in motion.
- A flying start is not allowed.
- When an interruption occurs during a competition (with the exception of a determined sweeping interval in case of snowfall), the starter must give the next athlete two (2) minutes preparation time before the signal "Track is Clear" is given.

1.4 **Start Intervals**

Only one sled may be on the run at any one time; exception: Team Relay competition (§ 3, 6.7).
The starter may allow the athlete to start only if the "Track is clear" statement has been relayed to the start leader from the finish.

1.5 **Start Assistance**

Assistance by others in accelerating is forbidden.

2 Finish

2.1 The finish and with it the end of the training or evaluated run is determined by the finish light barrier. Either the athlete or the sled may trigger the finish light barrier, the athlete/athlete pair must be in contact with the sled.

2.2 In the finish area, the Sports Director must arrange a zone where the athlete must be able to leave the track without any help.
An escort in this zone is not allowed.
This is valid for the OWG, FIL Championships and World Cups in the General Class.

2.3 Under the responsibility of the organizers of Championships and World Cups, a time display has to be installed at the end of the outrun where the times of each run and the current ranking of the athlete will be shown sufficiently long enough to be seen by the athletes.

3. General Rules

3.1 Principle Rule

a) During all FIL competitions, the athlete must travel on his/her sled from the start to the finish in a seated or reclined position.
b) If an athlete crashes, he/she must be in contact with the sled when crossing the finish line.
c) A crash is not grounds for disqualification.
d) If a competitor loses any item during a run with the exception of visors, that athlete can be disqualified if the intention to disadvantage subsequent athletes is clear.

3.1.1 Start under protest

A start under protest has to be granted

3.2 Passing the finish line

If an athlete crashes after the FIL marking (line) and before the finish line, then he/she must reach the finish (in doubles, both athletes) in contact with his/her/their sled and trigger the finish line barrier. Pushing, paddling or walking with the sled in order to reach the finish light barrier is not permitted and will lead to a disqualification.

3.3 Workshop

A suitable workshop area is to be placed at the disposal of the athletes by the organizers so that necessary work may be completed on their sleds.

3.4 The entire length of the track is to be checked.

At OWG, FIL Championships, and World Cup races, anemometers must be installed at the exposed areas on all tracks.
The Technical Commission of the FIL decides on the location of these.
If wind speeds of more than 35 km/h (9.8 m/sec) are measured, the technical delegate and the race director decide upon further training and/or racing procedures.

3.5 Track alterations during the execution of a discipline

If weather conditions, such as snow, thaw, etc. create unequal conditions for individual athletes during a race, organizers must provide a readily available work crew.
While the forerunners are starting, the technical delegate determines the intervals of the sweeping as follows:

- sweeping interval (for example after every third athlete)
- sweeping time (for example 1 minute)
- if there is a break during a run, the track is swept until the next athlete starts (break time = sweeping time)
- during the last run, the distribution of the sweeping intervals starts with the best rank
- the race director is responsible for the entire sweeping intervals. The team captains have to be informed.

Any conscious change of track conditions during a race is forbidden.

3.6 Quality of the track

During final training and competition of each discipline (can be one or more runs), the following conditions must be adhered to:

- Change to the ice profile may no longer be done (only damaged areas can be repaired).
- The ice must be superbly prepared (racing condition).
- The ice temperature and water spray temperature must be kept as constant as possible.
- There must be sweeping intervals during snow fall.

This arrangement must be determined by the technical delegate and race director.

3.7 Fundamentally, sun shades must be open during official training and competition. If necessary, sun shades may be shut after consultation with the TD.

3.8 The decision whether the track is prepared prior to a run or not will be made by the technical delegate together with the race director.

3.9 Competitions may be held in extreme weather conditions with a temperature as low as minus 25°C.

3.10 The Executive Board can make exceptions regarding the maximum distance between the start and finish lines for FIL competitions.

3.11 At FIL competitions, the competition stretch can be shortened by a jury decision under special circumstances.

3.12 **Transportation of sleds and athletes**

Along the track, there must be paths or other facilities which make it possible for the athletes to travel with their sleds from the finish to their respective starts without great difficulty. The transportation should be available on time before and after the training or competition.
It is necessary to provide adequate opportunities for parking in the start and/or finish areas.

4. Timing

4.1 **Timing Equipment**

Timing equipment with automatic and printing capabilities is required and must operate with at least one (1) start time, three (3) intermediate times and the finish time with an accuracy of 1,000th of a second.
The official start and finish light barriers have to be marked during training and competition in color across the entire bottom and sides of the track.
All other openings necessary for installing light barriers at the start and finish areas are to be covered.

The installation of additional timing equipment by third parties is forbidden.

4.2 **Timing Equipment's**

a) Two independent timing systems, each consisting of at least one time measuring device, complete set of light beams and independent power supply, must be available and in operation during a competition (A and B systems).
b) The A system comprises all light beams for start, start time, three intermediate times and finish time for each start height as required by the rules.
c) The B system comprises at least the start and finish light beams for each start height to record the run time.
d) The time of day of both timing systems (A and B systems) must be synchronized and have an accuracy of 1,000th of a second.
e) Two evaluation and control computers for the timing system must be available and in operation during a competition.
f) The times measured by both timing systems must be recorded in both evaluation and control computers of the timing system.
g) In case of failure of the A system it must be possible to switch to the B system without time delay. After this, the times measured by the B system will be used for the continuation of the competition. The times recorded by the A system up to this point will remain valid.
h) In case of failure of the evaluation and control computer currently operating, it must be possible to switch to the second computer for controlling the timing system within a short time frame. The ranking valid up to this point is to be saved.
i) A check list will be issued detailing the switching between the two timing systems and the two control computers.
j) Independently from the computer, the light beam times recorded by each timing system must be printed as daytimes on a corresponding timeline printer.

k) For external service providers an online data interface must be available through which they can obtain the measured light beam times (e. g. when TV graphics are required)
l) Uninterrupted power supply must be available for the timing system (time measuring devices and control computers) securing that at least the time of the current sled to the finish is recorded. The power supply of the light beams of the A and B systems must be independent from each other.
m) Start light signals must be available at all official start heights.

4.3 **Preparation**
The timing equipment must be tested and be ready for use at least one (1) hour before the beginning of each discipline.

4.4 **Difficulties**
If a problem occurs with the timing equipment, the timer responsible must immediately inform the race director; the race director may interrupt the race as long as it takes to guarantee proper timing. The athletes who were affected by the timing failure must repeat their runs at the latest within 30 minutes. The race director will decide on the exact starting time.
This also applies during training.

4.5 **Breakdown of timing equipment**
If there is a prolonged breakdown of the electronic timing equipment during a heat, the heat may be annulled by the race director with the consent of the technical delegates.

4.6 **Finish House**
Team officials and competitors are not permitted in the area in which the recording of time is performed during the duration of the competition.

4.7 **Maintenance of the timing equipment**

a) For each season the timing equipment must be maintained by a professional company.
b) A maintenance report will be issued specifying the operations carried out during the maintenance.
c) Records must be kept of all existing deficiencies which cannot be corrected immediately through the regular maintenance activities (e. g. computer damage).
d) In the maintenance report it must be confirmed that the timing equipment is ready for use.
e) The track operator must submit the maintenance report to the FIL Office prior to the first international competition.

5 <u>Results</u>

5.1 The official results are the total sum of the times recorded by the athletes in each individual heat.

5.2 If two or more athletes record the same time for a run, they are awarded the same place.

5.3 The first and family name (last name) and start number of athletes who dropped out or who were disqualified are to be entered in the results lists with the times achieved up to that point.
Under "dropped out ", all applicable athletes are classified as:
- DNS (did not start (e.g. sickness, injury)
- DNF (did not finish due to a crash.
- DSQ (disqualified for violation of the provisions of the IRO)

5.4 The official results list is to be signed by the race director and the chairperson of the jury.
The names of the jury members and of the technical delegates are to be listed.
The full names of all participants are to be entered on the results list.

5.5 At the end of the competition, the official results lists or CD are to be distributed to each National Federation participating in the competition.
One original copy must be sent to the FIL office immediately after the competition.

5.6 **Results and timing lists as evidence**
The official times for each athlete are to be immediately recorded in writing.
All documentary evidence is to be used as a basis for checking and for possible protests.
All documentary evidence is to be kept by the organizer for a period of one year after the end of a competition.

§ 11 Disqualification, Protests

1. Violation of Rules

1.1 A disqualification can be declared by the race director if athletes or teams have violated regulations in the IRO and if the violation is detected between the beginning of training and the end of the competition including all inspections required by the IRO (§ 4, 1.1.7).

1.2 **Procedure during competition**

1.2.1 The TD, the start or finish leader has to immediately inform the race director if a violation has been determined. Participating jury members or TD are also to be informed.

1.2.2 Items or respective pieces of evidence are to be submitted to the race director by the judge, jury member or by the respective TD.

1.2.3 Upon reviewing circumstances in the presence of a jury member or TD, the race director can declare a disqualification.

1.2.4 The team (coach) affected must be immediately informed about this. The athlete is to be informed should there be no coach on site.

1.2.5 A rule violation must be declared to the team or athlete affected at the latest 10 minutes after the end of the respective competition run.

1.2.6 The piece of evidence must be provided to the TD, start or finish leader in order to clarify the situation.

1.2.7 In case of a disqualification, a report on the violation of the rules is to be given to the team captain or athlete affected.

1.2.8 The athlete has the possibility at the start to take his/her run under protest.

2. Protests

2.1 **Reason for a Protest**

If an athlete or a team believes himself/herself to be at a disadvantage due to factors which have occurred during official training, a race run or for another reason during a competition, the team captain/athlete has the right to protest.

A camera flash does not provide a reason for protest.

2.2 **Procedure**

2.2.1 Protests must be made in writing and must be dated and signed by the team captain or the team captain's representative.

2.2.2 The protest must be given to a jury member.

2.2.3 A protest fee of 50 Euros is to be paid when the protest is submitted.

2.2.4 In case of a disqualification, the written protest must be submitted within 10 minutes after receipt of the report according to § 11, 1.2.7. In all other cases, it must be submitted 10 minutes after completing the official training, the competition, or other protest reasons.

2.3 **Settlement**

2.3.1 The jury decides on all protests.

2.3.2 Concerning a protest, the jury must meet within one (1) hour of the submission of the protest.

2.3.3 If the reason for the protest is first known after the ten minutes (noted in point 2.2.4), the jury must deal with the protest and observe the final deadline for submission of the protest which is the conclusion of the competition (awards ceremony).

2.3.4 The jury may call in all persons and items connected with the protest on the spot to help clarify the circumstances.

2.3.5 In the case of a protest, the jury has to decide whether pieces of evidence (for example, films, pictures, video records, etc.) may be presented. However, this material is only used to help in making a decision.

2.3.6 The protest fee is returned in its entirety if the protest is decided in favor of the protesting party.

2.3.7 The team captain/athlete must be informed in writing if a protest is rejected.

2.3.8 If the protest is denied, the protest fee is forfeited and is granted to the organizers of the event. The protest fee must be given to the race director.

2.3.9 The decision of the jury in all protests is final. It may only be appealed against in accordance with the FIL Law and Procedure Regulations.

2.3.10 All decisions made during a FIL competition by the race director, TD or jury member are only valid for this competition.

2.3.11 If violations of the regulations in the IRO are discovered after the conclusion of the competition, including all inspections required by the IRO, then the FIL Executive Board will make the decision in this case.

2.3.12 Reason and result of the infraction must appear publicly and transparently on the result sheet

§ 12 Awarding of Titles, Awards Ceremony

1. Titles for FIL World Championships

The invitation to the race notes the titles to be awarded at the FIL Championships.
These are to be awarded to the winners in the following disciplines:

1.1 Men's Singles with the title:
"World Champion in Men's Singles"

1.2 Women's Singles with the title:
"World Champion in Women's Singles"

1.3 Doubles with the title:
"World Champion in Doubles"
Both competitors receive the same titles and same honors.

1.4 Team-Relay competition with the title:
"Team Relay World Champion"

1.5 Sprint competition, Singles and doubles with the title:
“Sprint World Champion in Men’s Singles”
“Sprint World Champion in Women’s Singles”
“Sprint World Champion in Doubles”

1.6 U 23competition, Singles and Doubles with the title:
“U 23 World Champion”

1.7 The same titles and honors are used for the Junior World Championships, the title for the Team competition: “Team World Champion”

2. Titles for Continental Championships

The titles for Continental Championships are to be bestowed with the same name as the corresponding competition.

3. Awarding of titles in case of a reduction of runs

If the number of runs in a discipline is reduced, titles are only awarded if all athletes participate in at least one run.

4. Certificates

4.1 The certificate is an individual and written confirmation of participation in a championship.
The following must be clearly noted on the certificate:

- Name of the sponsoring NF
- Type of championship and the discipline in which the competitor participated
- Name of the athlete
- Level reached by the competitor in the final rankings
- Signatures of the FIL representative, chairperson of the jury and race director
- Location and dates of the event

4.2 Each competitor and official participating in a championship must receive a certificate.

5. Medals

5.1 For FIL Championships, World Cups, Nations Cups, JWC, YAWC, Team Relay World Cups, and Sprint World Cup, medals are awarded for places 1 to 3.

5.2. The medals are provided as follows:

- By the FIL:
  FIL-World Championships (General Class) and Junior World Championships,
  Overall World Cup in General Class / Junior Class / Youth A Class and Team Relay.
- By the organizers: Continental Championships, individual World Cup, Team Relay, Sprint World Cup, Junior/Youth A World Cup and Nations Cup.

6. Pins for Competitors and Officials

It is the obligation of the NF staging FIL Championships to give pins or badges as gifts at no cost to the athletes and officials.

7. Gifts of Honor and Mementos

The organizers are permitted to give participants in FIL Championships and FIL competitions gifts of honor and mementos.

8. Awards Ceremony and Conclusion of the Event

8.1 Procedure

The organizers must hold the awards ceremony for the champions as well as for the second and third place finishers in each discipline immediately after the competition in the finish area as follows:

- At the awards ceremony of all FIL competitions (FIL Championships, WC, TWC, SWC, JWC and YAWC), flags of the National Federations of the champions and the second and third place finishers must be raised.
  During the ceremony, the champion's national anthem must be played.
- If there are less than three ranked athletes in one discipline, this awards ceremony will not be staged.
- The staging of the official awards ceremony together with the flower ceremony is allowed.
- In the event of a tie for first place, the anthems of both competitors will be played in alphabetical order of family names.
- In the case of a tie in doubles, the family name of the front man is used.
- In the event of a tie, both flags will be raised.
- The same procedure may take place at all international competitions.
- The medals are presented to the top three finishers by the FIL representative. By the representative's absence, the chairperson of the jury awards them in a festive ceremony.

8.2 Awards Ceremony for Overall World Cup and Team Relay World Cup

The champions as well as the athletes placed second and third in the overall World Cup in the men’s, women’s, and doubles’ disciplines receive World Cup trophies provided by the FIL.
The top three ranked athletes in each discipline, as per total scoring, receive medals in gold, silver, and bronze.
The World Cup trophies and medals will be awarded at the awards ceremony of the last competition (World Cup final).

8.3 Awards Ceremony for the Overall Junior and Youth A World Cup

The overall champions of the Junior and Youth A World Cups receive trophies provided by the FIL.
The top three ranked athletes in each discipline, as per total scoring, receive medals in gold, silver, and bronze.
The trophies and medals will be awarded at the respective last competition (final competition).

8.4 Ceremony FIL World Championships

At the conclusion of an awards ceremony at FIL Championships, the FIL President or representative presents the FIL flag in a ceremonious manner to the representative of the NF which will stage the next FIL Championships.

§ 13 Concluding Regulations

1. The IRO is available in German and English.
   In case of unclarity or contradictions, the German text is binding.
   All event organizers are required to provide a translator at all team captains meetings for German and English.
   Furthermore, translator(s) must be on-site during the race day to assist with translation in the event an emergency, protest, or other matter surfaces.

2. Resolutions regarding amendments and additions to the IRO can only be made by an ordinary Congress and require a simple majority as long as the priority regulations of the FIL statutes do not state otherwise.
   Urgency motions to change the IRO are only permitted in adherence to the FIL statutes.

3. In substantiated cases for exceptions, changes in the IRO may be decided by the FIL Executive Board upon proposal by the appropriate expert commission.
   They will be presented for ratification at the next FIL Congress.
   The same is valid in case of controversial interpretations, contradictions and omissions in the regulations of the IRO.

4. Changes and additions to the IRO become valid with the beginning of the following sport year on July 1st. Executive decisions will become valid as of the date agreed on.

5. This edition of the IRO becomes valid from July 1, 2016 onwards.
   At the same time, the former regulations of the IRO become invalid.

Supplement 1

Regulation for Artificial Luge Tracks

1. General

All championships and competitions awarded by the FIL are staged on tracks which are recognized by the FIL and which are officially commissioned.

2. Definition

2.1 Artificial luge tracks are luge tracks which have been specially constructed for the sport of luge by means of specific construction measures.
A difference is made between artificial luge tracks with or without refrigeration system.

2.2 Combined bobsleigh and luge tracks are tracks which have been specially constructed for the sport of bobsleigh and luge by means of specific construction measures.
A difference is made between tracks with or without refrigeration system.

2.3 Shortened tracks are artificial luge tracks with or without a refrigeration system with a minimum length of 400 m.
They are suitable for international competitions.

3. Regulations for the Construction of Tracks

3.1 **Length of the track**
The minimum length of the track between the start and finish lines must be at least 1,000 m for men's singles and at least 800 m for women's singles, doubles and juniors.
As a general rule the maximum length between the start and finish lines for men's singles must not exceed 1350 m. Necessary exceptions due to topography must be approved by the Executive Board.

3.1.1 The gradient of the track should be designed in a way that a speed of approx. 80 km/h is reached approx. 250 m after the start. The average gradient of a track from the men's start to the low point should not exceed 10%. The average gradient of the second half of the track should not exceed 8%. The calculated maximum speed must not exceed 135 km/h. The technically difficult track elements (labyrinth, left-left or right-right combinations) should be incorporated in the first two thirds of the track.

3.2 **Finish outrun**
The gradient of the outrun must not exceed 20% and must give the athletes the possibility for an exit along one side.
The length must be calculated so that a sled, without braking, will not exceed 40 km per hour at the end of the outrun.
The sled must be able to travel further unhindered.
Should a gentle angle or a curve be necessary in the outrun area, this must not be considered as a braking area.

3.3 **Shortened tracks**
3.3.1 Minimum length 400 m
Track components: 1 left curve, 1 right curve, 1 labyrinth, 1 straightaway.

3.3.2 If one wishes to build a shortened track into a full length track according to section 3.1, the shortened section should be the upper part of the final track.
The top speeds on a shortened track must not exceed 80 km/h.

3.4 **Start facilities**

For men, women, doubles, juniors and youth events, the track must be equipped with all the necessary starting structures to guarantee normal execution in all disciplines.
During FIL competitions, it must be possible to close off the starting zone.
The individual components of the start facility are: a horizontal iced surface on which the sitting position on the sled may be taken by the athlete.
Length of the horizontal iced surface to the start handles: at least 2000 mm.
Length of the horizontal iced surface from the start handles to the beginning of the descent: 500 mm (refer to sketch I).
Two start handles adjustable in height on either side of the start area which may be used by the athletes to increase the speed of their start (refer to sketch II).
From the ice to the upper edge of the handles at an equal height: 230 mm - 250 mm.
Inside distance between the two handles: 700 mm.
Length of the handle: at least 150 mm.
Diameter of the handle: 27 mm.
The surface of the handle must be grooved.
The construction of the start handle should be so solid that it cannot be bent upon the athlete's pull off.
The start light barrier must be installed between 5 m and 10 m after the start handles. The start time (from start light barrier to next light barrier) should exceed 3 seconds; if this is not possible, it should be taken immediately after the first curve. Light barriers must be installed in a height of 300 mm above the bottom of the track measured from the concrete. The height must be between 20 cm and 25 cm on the iced track.

3.4.1. The start ramp should have a gradient of 20-25% and a length of min. 10m and max. 30 m. The entry angle should not exceed 8° to the track axis.

3.4.2 Regular start ramps must be included for men's, women's, doubles, Juniors, and Youth A. The locations are set by the Track Construction Commission in the preliminary planning phase.
Two additional short start facilities should be provided for youths and tourists.

3.4 Safety regulations

The track layout and components such as curves, walls, bridges, tunnels, transportation set-ups, etc. as well as all facilities originally belonging to the track must be provided in such a way, that the safety of the user is guaranteed to the greatest extent possible.
If the safety regulations on a track are neglected so that the participants in FIL competitions are exposed to atypical danger to their health, the track may only be released by the technical delegate for further use if these deficiencies are remedied.
If the steps taken are not sufficient in order to guarantee that the internationally recognized safety standards are followed during a competition, the jury, in agreement with the technical delegates is empowered to shorten the track.

3.5 Commissioning

The FIL Executive Board decides on official recognition and approval of an artificial luge track for OWG, FIL Championships and FIL competitions after the following criteria have been fulfilled:

- Examination of the project documentation,
- Inspection during summer construction,
- Release of the project through the designers and construction engineers,
- Release of the track for the test is done by at least two members of the Track Construction Commission,
- The test for the homologation takes at least four days with two test sessions per day. (Approved at the 59th FIL Congress 2011 in Berlin),
- The test must be carried out by at least 3 men and 3 women in singles and 3 doubles from different nations. The participating athletes are suggested by the FIL Executive Board,
- Upon a successful test, the track will be commissioned by the Executive Board of the FIL,

- The final commissioning of the entire track facility will be issued according to the criteria in the Book of Requirements.

The expenses are assumed by the track owner.
The owners are to receive written information concerning the commissioning of an artificial luge track within one (1) month after a positive resolution by the FIL Executive Board.
The members of the FIL will be informed of this decision in the next bulletin.
An official recognition (commissioning) and approval is in general only granted for **5 years**. After expiration of this time period, the track operator has to apply for an extension.
Where construction measures have been performed in the meanwhile, the track has to be approved again. The commissioning can include requirements.

3.7 **Buildings at the track**

- Two start houses (men's start, women's start) with the following rooms:
  - 1 large room for use by the teams (for approximately 60 persons),
  - 1 room for press, radio, and television,
  - Toilets for men and women.
- Start houses at other start levels (juniors and youth),
  - 1 large room for use by the teams (for approx. 30 people),
  - Restrooms for women and men.
- A finish house with the following rooms:
  - 1 room for complete timing,
  - 1 room for jury and technical delegates,
  - 1 room for information services (press, radio, television),
  - 1 soundproof locked room for the announcer with a direct view of the finish and timing,
  - 1 first-aid room,
  - Restrooms for men and women,
  - 1 workshop (with necessary equipment),
  - 1 room for dignitaries,
- Inspection room directly at the finish outrun,
- Stands for honorary guests as well as facilities for press, radio and television above all within the start and finish areas,

Sketch I

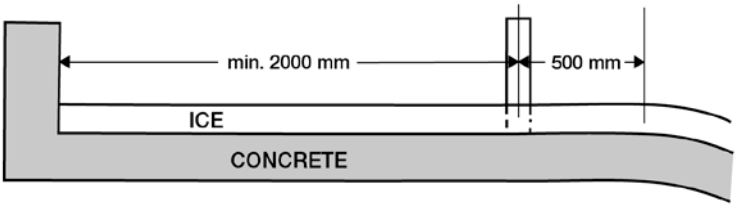

Sketch II

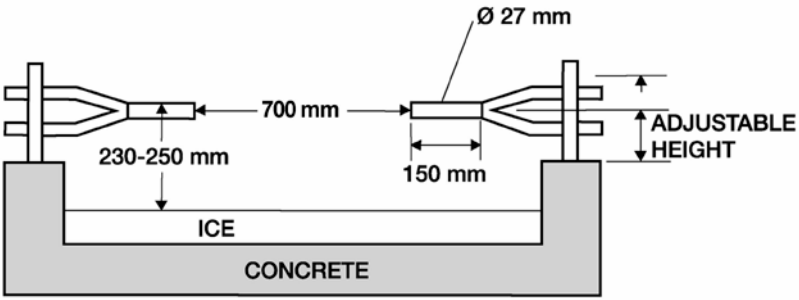

Supplement 2

Rules for Instruction of International Judges

1. Basics

1.1 The training regulation of the FIL is an obligatory work document for all National Federations associated with the FIL.

1.2 During all FIL competitions, judges from the respective NFs may only be appointed if they possess FIL International Judge Licenses acquired in accordance with these instruction regulations.

1.3 The NFs associated with the FIL have the right to conduct the instruction and qualification of international judges under their own responsibility.

1.4 Only persons who are full members of NFs associated with the FIL may be admitted to instruction and qualification as an international judge.

1.5 The International Judge License is personally issued to the applicant after an exam.

1.6 The FIL may withdraw an International Judge License for gross infractions against sportsmanship-like ethics and morals in the conduct of one's duties.

2. Instruction

2.1 The task of the NF is to select qualified persons who may be enrolled for instruction and qualification by the NFs for the International Judge License.
The number of international judges instructed by a NF is not limited.

2.2 For instruction and qualification, the NF must appoint a head instructor and two assistants who have the necessary specialized knowledge to instruct the applicants.

2.3 The instruction and qualification must be under the supervision of the NF in accordance with the lesson plan of these instruction regulations and must not be under the prescribed 22 hours of instruction.

2.4 The period of instruction and qualification may not exceed six months measured from the beginning of instruction to the conclusion of the test.

3. Lesson Plan

3.1 All sections of the IRO.
3.2 All supplements of the IRO.
3.3 Practical work with measuring devices.
3.4 Working during a FIL competition with the assignment of special tasks and discussions.

4. Composition of the Examination Commission

4.1 FIL representative (proctor)
4.2 Chairperson of the Examination Commission
4.3 First assistant to the chairperson
4.4 Second assistant to the chairperson

5. Responsibilities of the Examination Commission

5.1 An Examination Commission is appointed by the NF to administer the final examination to the applicants.
As a rule, the head instructor should belong to this commission.

5.2 The chairperson of the Examination Commission must inform the judge representative of the FIL of the examination date at least eight (8) weeks in advance of the examination so that the FIL proctor may be named and confirmed in writing to the NF.
Expenses for the travel and accommodations of the FIL proctor are assumed by the NF.

5.3 A record is to be made concerning the results of the examination and its execution.
This report must include the signatures of the Examination Commission and the FIL proctor with notation of the place and date of the examination.

5.4 The FIL proctor has to send this record to the judge representative of the FIL.

6. Examination Regulations

6.1 The examination is given in written and oral form.
The examination documents are available from the judge representative of the FIL.

6.2 The Examination Commission determines the length of time for the examination.

6.3 Candidates who use external aids during the examination which seriously put their knowledge or ability into question will be disqualified.

6.4 The examination is passed when the applicant responds correctly to at least three quarters of the posed questions.

6.5 With the approval of the President of the FIL, a special examination may be conducted for a national coach who has been in this position for many years.

7. Issuance of the International Judge License

7.1 The representative of the FIL issues the International Judge License and the International Judge Badge to the applicants in question after they have successfully passed the examination.

7.2 The FIL distributes the International Judge License in the form of a passport identification booklet signed by the FIL President.

7.3 The names of FIL international judges are entered in the FIL Directory of International Officials according to their names and National Federation.

7.4 The FIL member NFs must grant international judges free entry to FIL competitions upon presentation of their identification card even if they are not working at the event(s).

7.5 The FIL Executive Board can withdraw the International Judge License from a judge, if he/she engages himself/herself in activities which harm the reputation of the FIL.

Supplement 3

Regulations for Audio-Visual Media Rights

1. General

1.1 The aim of the FIL is to promote the sport of luge worldwide. In order to come up to this challenge, it is necessary to establish uniform regulations for the coverage of the sport of luge via television, film and other new media (for example Internet) in order to achieve superb and worldwide media presence.

1.2 If there are no other regulations, the FIL is the exclusive and worldwide owner of the rights for audio-visual media for all events taking place on behalf of or with the approval of the FIL.
The following rights belong to the subject audio-visual media:

- television (free or pay TV, all kinds of broadcasting, terrestrial, cable, satellite, etc.)
- film (all formats)
- video (all systems including video games, etc.)
- projection rights
- movie and video pictures on the internet

1.3 If these regulations are not considered, the respective competition can be cancelled from the international FIL events schedule for a certain period to be determined by the FIL Executive Board and/or it can result in sanctions against the respective NF.

2. Award of Television Rights

2.1 **International Competitions (with the exception of championships)**

2.1.1 The FIL authorizes the NFs affiliated with the FIL to make contracts on the awarding of the television rights which concern television broadcasts of luge events - except FIL Championships and Olympic Winter Games - which the Federation organizes in its country for the broadcasting area within its own country.
The NF can delegate this responsibility to individual organizations belonging to the Federation. For the handing over of television rights to television companies outside the organizing country, the FIL is solely responsible.

2.1.2 Prior to signing them, all contract drafts are to be presented to the FIL for approval.
The FIL can only withhold its approval due to an important reason.
An important reason would be if the contract partner cannot furnish production and/or broadcasting guarantees (in sufficient technical quality) and/or the contract partner does not provide an international live signal.
If six months prior to the event, no detailed contract offer has been presented, the FIL reserves the right to award a contract itself.

2.1.3 The NF or the event organizer authorized by the NF is obliged to grant the FIL free access to the live signal (signal with graphics and voice according to international standard).

2.2 **Championships**
Regarding an agreement with television stations concerning the broadcasting rights of FIL Championships, the FIL Executive Board acts together with the organizing NF.
The FIL Executive Board makes the final resolution.

2.3 **Olympic Winter Games**
Agreements regarding the broadcasting rights of the Olympic Winter Games are the responsibility of the IOC.

2.4 **Commentator Booths**
The NF or the event organizer authorized by the NF has to guarantee the FIL that sufficient commentator booths are available.

3. Video, Film, and Other Rights

After agreement by the FIL, the NF is authorized by the FIL, to award the film and video rights in its own country, as long as it is guaranteed that marketing these rights abroad is not possible.

4. Short Reports

The award of short report rights has to be done according to national and international regulations. If a respective request is made at the recording station, the FIL has to be informed at once.

5. Financial Regulation

5.1 **Television**
For championships, the FIL is obliged to give 2/3 of the net income of the sales of the television rights (after deduction of possible taxes or other issue-related expenses) to the organizing NF.

5.2 **Video**
The FIL has to give 2/3rds of the income of the selling of commercial film and video rights to the organizing NF.

6. Miscellaneous

These regulations were acknowledged during the FIL Congress in Rome on June 24-25, 1994, and they were more precisely worded by the Congress in Colorado Springs in May 1998.

Supplement 4

Olympic Rules

1. Validity

For the luge competitions during Olympic Winter Games (OWG), the stipulations of the International Luge Regulations (IRO) are valid.
The following additional rules are valid for the OWG:

1.1 **Competition Runs**

- Singles: 4
- Doubles: 2
- Team Relay: 1

1.2 **Draw, Start Order**

Calculation of seeded groups for individual disciplines results from the World Cup point ranking of the three previous World Cup races from a minimum of three different tracks and a minimum of two different nations.

Draw of the seeded groups A, B, C and rest groups

(A) 1 - 12 (1-6, 7-12),		(B) 13 - 24,	(C) 25 - 36,	37 to the last Start no.

Singles (women and men)

1st run	1 - 12 (A)	13 - 24 (B)	25 - 36 (C)	37 to last start no.
2nd run	12 - 1 (A)	24 - 13 (B)	36 - 25 (C)	last start no. to 37

3rd run 1 - last place (according to placing after 2nd run)
4th run 20th place to 1st place (according to placing after 3rd run)

- Athletes, which do not qualify for the 4th competition run, will be ranked according to their placing in the 3rd competition run.

Doubles

1st run	1 - 12 (A)	13 - 24 (B)	25 - end
2nd run	last place to first place (according to placing after 1st run)		

Team Relay (IRO § 3, 6.7)

- Determination of the nation ranking for the Team Relay competition according to the IRO § 3, 6.7.5

1st Heat of the competition (§ 3, 6.7.3)

- Start order, according to the nation ranking for the Team Relay at OWS in reverse order (§ 3, 6.7.7)

1.3 **Maximum Numbers of Participants per National Federation**

- Women 3
- Men 3
- Doubles 2

1.4 **Education of International Judges**

The Organizing Committee (OC) of the Olympic Winter Games is responsible for the education of the judges appointed for the Olympic Winter Games and has to take care of the respective expenses.

1.5 **Advertising Regulations**

The regulations of the IOC are valid.

1.6 **Nominations / Entry Fee**

According to the regulations of the IOC, the nominations have to be made by the NOC responsible to the OC on the stipulated dates.
The Executive Board of the FIL is to be constantly informed on the nominations by the OC.
No entry fee has to be paid.

1.7 **Inspections at the Finish**

At OWG the drawn sled is marked after the 1st or 3rd run and inspected for compliance with § 5, § 7 after the last run on the current day.

1.8 **Withdrawal Due to Injury / Sickness**

If, during training, an athlete who is nominated for the participation in the singles discipline withdraws due to injury / sickness, then another athlete who belongs to the Olympic team and has completed the minimum number of training runs can be nominated instead.

1.9 **Training**

The Olympic training will be regulated as follows:

- 1 systematic training run per discipline
- 6 training runs per discipline over 3 days

Training groups of NFs may be established by the FIL and Organizing Committee to standardize group size.

- 1st training day, training by groups according to draw of NFs
- 2nd training day, training by groups in reversed order of NFs

  Note: On 1st and 2nd Training days, nations with partnership programs may be placed into the same training group, but the draw within their group will be done by individual nations.

- 3rd training day: joint training according to new draw (no groupings, all nations drawn individually).

- Each day, in accordance with the draw
  - 1st training run first to last by NF,
  - track maintenance,
  - 2nd training run last to first by NF.

- Doubles drivers who participate in singles training cannot participate in singles training assigned to doubles drivers, and they get no systematic run in doubles.
  In case only one athlete from a doubles team participates in singles training, the doubles team can take the systematic run in doubles.
- If a time difference of two (2) or more days exists between two (2) race runs of a discipline, then at least one (1) training run must be added for the athletes participating in the competition before the next race run.
- If a time difference of two (2) or more days exists between two (2) training runs of a discipline, then at least one (1) additional training run must be offered for the athletes participating in the competition.
- If a time difference of two (2) or more days exists between the last training and the first race runs of any discipline, then at least one (1) additional training run must be offered for the athletes participating in the competition. For the Team Relay competition, this is calculated per discipline.

1.10 **International Training Courses on the Olympic Track**

The organizers of the Olympic luge competitions are obligated to offer in the pre-Olympic and the Olympic season altogether two International Training Weeks for all NFs.
At least 6 training days with at least 3 training runs per day are to be made available in each week.

The same number of training runs must be made available to all NF's; cancelled training runs must be replaced. During these two International Training Weeks, no privileges are granted to athletes of the host nation.
The Executive Board of the FIL will decide on possible training restrictions during the Olympic season

In regards to newly constructed Olympic tracks, no additional training runs can be completed prior to the Olympic Games outside of scheduled and approved FIL weeks, with the exception of the host nation. All training opportunities must be equally available to all nations.
Agreements between individual National Federations regarding training runs outside training authorized by FIL on the "Olympic" track are forbidden when it results in a breach of the principle of "Fair Play" or a disadvantage for other athletes or National Federations.

A determination of a violation will result, at a minimum, in the loss of seeded placing in the Olympic Games, and possible additional sanctions as determined by the FIL Executive.

1.11 **Test Race**

One year prior to the OWG, the track has to be available to the FIL for a test competition open to all NFs, during the same time period as the Games are scheduled.
The technical delegates of the FIL present at the test race have to examine the track regarding its safety and the technical facilities.
The OC and the staging NF have to be informed on the result of the test race in writing. Complaints have to be fully remedied prior to the staging of the OWG.

2. Preparation and Staging

2.1 **The FIL as Highest Body**

The FIL is responsible to the IOC for the proper staging of luge competitions.
The FIL is the highest body of these competitions. In order to meet this task, the FIL appoints and sends the following persons at the expense of the OC during the staging of the Olympic luge program:

- the President and the General Secretary (they officially represent the FIL),
- the jury, consisting of the chairperson and two members,
- the technical delegates, consisting of three persons,
- additional international judges
  (the number is coordinated between the IOC, the OC and the FIL)
- two IOC technical delegates who have to provide the permanent contact to the IOC.

For the jury, technical delegates, and IOC technical delegates, walkie-talkies with independent frequencies have to be provided.

2.2 **Responsibility of the National Federation**

The National Federation in cooperation with the OC of the OWG is responsible for the organization of the Olympic luge competitions.
A permanent and close cooperation between the National Federation, OC and the FIL starting with the preparation work until the completion of the Olympic luge competitions is necessary.
A sport office / luge department has to be provided by the OC for the luge competitions and a full-time director has to be appointed.
The National Federation responsible must be represented in a leadership position by its president or by an elected chairperson.

2.3 **Officials, Judges, Assistants**

Each NF hosting Olympic luge competitions should have approximately 30 international judges who should already be working during the pre-Olympic test.
The FIL supports the required education and training. Judges who have important tasks during the OWG (race leader, start and finish leaders, chief of track and their representatives) should gain experience already prior to the OWG during important FIL competitions.
The FIL reserves the right to name and approve key leadership positions such as Race Director, Assistant Race Director(s), Ice Experts.

The following officials / judges / assistants are required for the Olympic luge competitions:

- organizing chairperson
- assistant chairperson
- - 6 officials in the luge sport office / luge department
- press chief
- race director
- assistant race director
- start leader
- assistant start leader
- assistants at the start
- starter
- finish leader
- assistant finish leader
- assistants at the finish
- person in charge of weigh in
- recorder for weigh-in
- assistant for weigh-in
- ice experts
- chief of track
- assistant track chief
- chief of timing
- assistant chief of timing
- persons to check the temperature of the runners
- persons to keep the records of this inspection
- chief of transport
- announcer for the track loudspeaker system
- assistant for the announcer
- 2 - 3 translators
- track workers for track building and maintenance
- Total required: approximately 45 - 60 persons.

- If the weather conditions are unfavorable, approximately 50 additional persons are required to work at the track (snow removal, etc.). Some of these positions may be employed and others are as a volunteer.

2.4 **Program / Time Schedule**

By paying attention to the overall planning of the Olympic Winter Games, the organizers (OC and NF) propose the detailed Olympic luge schedule to the FIL in time.
The schedule has to be approved by the FIL Executive Board.
Changes which are determined by the FIL Executive Board are binding and have to be met by the organizers (OC).

2.5 **Interpreters**

A sufficient number of interpreters fluent in German and English have to be available for the officials.

3. Luge Tracks

In general, Olympic luge competitions are staged on combined bobsleigh, luge and skeleton tracks with artificial refrigeration.
The “Regulation for Artificial Luge Tracks” (Supplement 1) is valid.

4. Eligibility Rules

With regard to permission to participate in the Olympic Winter Games, the qualification criteria as agreed on and amended by the FIL and the IOC will apply.
In individual and justified cases, the FIL Executive Board can make exceptions.

5. **Doping Controls:** the regulations of the IOC are valid.

Supplement 5

Individual Weight Allowances

Men:

Additional Weight Allowance (AW) = 100% of the difference between 90 kg and body weight (BW) (max. 13 kg)

Total Weight Allowance (TW) = BW + AW + 4 kg Race Clothing (RC)

Body Weight **BW in kg**	**Additional Weight** **AW in kg**	**Race Clothing** **RC in kg**	**Total Weight** **TW in kg**	**Total** **with Sled**
72,7	13,0	4,0	89,7	112,7
72,8	13,0	4,0	89,8	112,8
72,9	13,0	4,0	89,9	112,9
73,0	**13,0**	**4,0**	**90,0**	**113,0**
73,1	13,0	4,0	90,1	113,1
73,2	13,0	4,0	90,2	113,2
73,3	13,0	4,0	90,3	113,3
73,4	13,0	4,0	90,4	113,4
73,5	13,0	4,0	90,5	113,5
73,6	13,0	4,0	90,6	113,6
73,7	13,0	4,0	90,7	113,7
73,8	13,0	4,0	90,8	113,8
73,9	13,0	4,0	90,9	113,9
74,0	**13,0**	**4,0**	**91,0**	**114,0**
74,1	13,0	4,0	91,1	114,1
74,2	13,0	4,0	91,2	114,2
74,3	13,0	4,0	91,3	114,3
74,4	13,0	4,0	91,4	114,4
74,5	13,0	4,0	91,5	114,5
74,6	13,0	4,0	91,6	114,6
74,7	13,0	4,0	91,7	114,7
74,8	13,0	4,0	91,8	114,8
74,9	13,0	4,0	91,9	114,9
75,0	**13,0**	**4,0**	**92,0**	**115,0**

Body Weight BW in kg	Add. Weight AW in kg	Race Clothing RC in kg	Total Weight TW in kg	Total with Sled
75,1	13,0	4,0	92,1	115,1
75,2	13,0	4,0	92,2	115,2
75,3	13,0	4,0	92,3	115,3
75,4	13,0	4,0	92,4	115,4
75,5	13,0	4,0	92,5	115,5
75,6	13,0	4,0	92,6	115,6
75,7	13,0	4,0	92,7	115,7
75,8	13,0	4,0	92,8	115,8
75,9	13,0	4,0	92,9	115,9
76,0	**13,0**	**4,0**	**93,0**	**116,0**
76,1	13,0	4,0	93,1	116,1
76,2	13,0	4,0	93,2	116,2
76,3	13,0	4,0	93,3	116,3
76,4	13,0	4,0	93,4	116,4
76,5	13,0	4,0	93,5	116,5
76,6	13,0	4,0	93,6	116,6
76,7	13,0	4,0	93,7	116,7
76,8	13,0	4,0	93,8	116,8
76,9	13,0	4,0	93,9	116,9
77,0	**13,0**	**4,0**	**94,0**	**117,0**
77,1	12,9	4,0	94,0	117,0
77,2	12,8	4,0	94,0	117,0
77,3	12,7	4,0	94,0	117,0
77,4	12,6	4,0	94,0	117,0
77,5	12,5	4,0	94,0	117,0
77,6	12,4	4,0	94,0	117,0
77,7	12,3	4,0	94,0	117,0
77,8	12,2	4,0	94,0	117,0
77,9	12,1	4,0	94,0	117,0
78,0	**12,0**	**4,0**	**94,0**	**117,0**
78,1	11,9	4,0	94,0	117,0
78,2	11,8	4,0	94,0	117,0
78,3	11,7	4,0	94,0	117,0

Body Weight BW in kg	Add. Weight AW in kg	Race Clothing RC in kg	Total Weight TW in kg	Total with Sled
78,4	11,6	4,0	94,0	117,0
78,5	11,5	4,0	94,0	117,0
78,6	11,4	4,0	94,0	117,0
78,7	11,3	4,0	94,0	117,0
78,8	11,2	4,0	94,0	117,0
78,9	11,1	4,0	94,0	117,0
79,0	**11,0**	**4,0**	**94,0**	**117,0**
79,1	10,9	4,0	94,0	117,0
79,2	10,8	4,0	94,0	117,0
79,3	10,7	4,0	94,0	117,0
79,4	10,6	4,0	94,0	117,0
79,5	10,5	4,0	94,0	117,0
79,6	10,4	4,0	94,0	117,0
79,7	10,3	4,0	94,0	117,0
79,8	10,2	4,0	94,0	117,0
79,9	10,1	4,0	94,0	117,0
80,0	**10,0**	**4,0**	**94,0**	**117,0**
80,1	9,9	4,0	94,0	117,0
80,2	9,8	4,0	94,0	117,0
80,3	9,7	4,0	94,0	117,0
80,4	9,6	4,0	94,0	117,0
80,5	9,5	4,0	94,0	117,0
80,6	9,4	4,0	94,0	117,0
80,7	9,3	4,0	94,0	117,0
80,8	9,2	4,0	94,0	117,0
80,9	9,1	4,0	94,0	117,0
81,0	**9,0**	**4,0**	**94,0**	**117,0**
81,1	8,9	4,0	94,0	117,0
81,2	8,8	4,0	94,0	117,0
81,3	8,7	4,0	94,0	117,0
81,4	8,6	4,0	94,0	117,0
81,5	8,5	4,0	94,0	117,0

Body Weight BW in kg	**Add. Weight AW in kg**	**Race Clothing RC in kg**	**Total Weight TW in kg**	**Total with Sled**
81,6	8,4	4,0	94,0	117,0
81,7	8,3	4,0	94,0	117,0
81,8	8,2	4,0	94,0	117,0
81,9	8,1	4,0	94,0	117,0
82,0	**8,0**	**4,0**	**94,0**	**117,0**
82,1	7,9	4,0	94,0	117,0
82,2	7,8	4,0	94,0	117,0
82,3	7,7	4,0	94,0	117,0
82,4	7,6	4,0	94,0	117,0
82,5	7,5	4,0	94,0	117,0
82,6	7,4	4,0	94,0	117,0
82,7	7,3	4,0	94,0	117,0
82,8	7,2	4,0	94,0	117,0
82,9	7,1	4,0	94,0	117,0
83,0	**7,0**	**4,0**	**94,0**	**117,0**
83,1	6,9	4,0	94,0	117,0
83,2	6,8	4,0	94,0	117,0
83,3	6,7	4,0	94,0	117,0
83,4	6,6	4,0	94,0	117,0
83,5	6,5	4,0	94,0	117,0
83,6	6,4	4,0	94,0	117,0
83,7	6,3	4,0	94,0	117,0
83,8	6,2	4,0	94,0	117,0
83,9	6,1	4,0	94,0	117,0
84,0	**6,0**	**4,0**	**94,0**	**117,0**
84,1	5,9	4,0	94,0	117,0
84,2	5,8	4,0	94,0	117,0
84,3	5,7	4,0	94,0	117,0
84,4	5,6	4,0	94,0	117,0
84,5	5,5	4,0	94,0	117,0
84,6	5,4	4,0	94,0	117,0
84,7	5,3	4,0	94,0	117,0

Body Weight BW in kg	**Add. Weight AW in kg**	**Race Clothing RC in kg**	**Total Weight TW in kg**	**Total with Sled**
84,8	5,2	4,0	94,0	117,0
84,9	5,1	4,0	94,0	117,0
85,0	**5,0**	**4,0**	**94,0**	**117,0**
85,1	4,9	4,0	94,0	117,0
85,2	4,8	4,0	94,0	117,0
85,3	4,7	4,0	94,0	117,0
85,4	4,6	4,0	94,0	117,0
85,5	4,5	4,0	94,0	117,0
85,6	4,4	4,0	94,0	117,0
85,7	4,3	4,0	94,0	117,0
85,8	4,2	4,0	94,0	117,0
85,9	4,1	4,0	94,0	117,0
86,0	**4,0**	**4,0**	**94,0**	**117,0**
86,1	3,9	4,0	94,0	117,0
86,2	3,8	4,0	94,0	117,0
86,3	3,7	4,0	94,0	117,0
86,4	3,6	4,0	94,0	117,0
86,5	3,5	4,0	94,0	117,0
86,6	3,4	4,0	94,0	117,0
86,7	3,3	4,0	94,0	117,0
86,8	3,2	4,0	94,0	117,0
86,9	3,1	4,0	94,0	117,0
87,0	**3,0**	**4,0**	**94,0**	**117,0**
87,1	2,9	4,0	94,0	117,0
87,2	2,8	4,0	94,0	117,0
87,3	2,7	4,0	94,0	117,0
87,4	2,6	4,0	94,0	117,0
87,5	2,5	4,0	94,0	117,0
87,6	2,4	4,0	94,0	117,0
87,7	2,3	4,0	94,0	117,0
87,8	2,2	4,0	94,0	117,0
87,9	2,1	4,0	94,0	117,0
88,0	**2,0**	**4,0**	**94,0**	**117,0**

Body Weight BW in kg	**Add. Weight AW in kg**	**Race Clothing RC in kg**	**Total Weight TW in kg**	**Total with Sled**
88,1	1,9	4,0	94,0	117,0
88,2	1,8	4,0	94,0	117,0
88,3	1,7	4,0	94,0	117,0
88,4	1,6	4,0	94,0	117,0
88,5	1,5	4,0	94,0	117,0
88,6	1,4	4,0	94,0	117,0
88,7	1,3	4,0	94,0	117,0
88,8	1,2	4,0	94,0	117,0
88,9	1,1	4,0	94,0	117,0
89,0	**1,0**	**4,0**	**94,0**	**117,0**
89,1	0,9	4,0	94,0	117,0
89,2	0,8	4,0	94,0	117,0
89,3	0,7	4,0	94,0	117,0
89,4	0,6	4,0	94,0	117,0
89,5	0,5	4,0	94,0	117,0
89,6	0,4	4,0	94,0	117,0
89,7	0,3	4,0	94,0	117,0
89,8	0,2	4,0	94,0	117,0
89,9	0,1	4,0	94,0	117,0
90,0	**0,0**	**4,0**	**94,0**	**117,0**

Women:

AW = 100% of the difference between 75 kg and body weight (BW) (max. 10 kg)

TW = BW + AW + 4 kg RC

Body Weight **BW in kg**	**Additional Weight** **AW in kg**	**Race Clothing** **RC in kg**	**Total Weight** **TW in kg**	**Total** **with Sled**
61,7	10,0	4,0	75,7	98,7
61,8	10,0	4,0	75,8	98,8
61,9	10,0	4,0	75,9	98,9
62,0	**10,0**	**4,0**	**76,0**	**99,0**
62,1	10,0	4,0	76,1	99,1
62,2	10,0	4,0	76,2	99,2
62,3	10,0	4,0	76,3	99,3
62,4	10,0	4,0	76,4	99,4
62,5	10,0	4,0	76,5	99,5
62,6	10,0	4,0	76,6	99,6
62,7	10,0	4,0	76,7	99,7
62,8	10,0	4,0	76,8	99,8
62,9	10,0	4,0	76,9	99,9
63,0	**10,0**	**4,0**	**77,0**	**100,0**
63,1	10,0	4,0	77,1	100,1
63,2	10,0	4,0	77,2	100,2
63,3	10,0	4,0	77,3	100,3
63,4	10,0	4,0	77,4	100,4
63,5	10,0	4,0	77,5	100,5
63,6	10,0	4,0	77,6	100,6
63,7	10,0	4,0	77,7	100,7
63,8	10,0	4,0	77,8	100,8
63,9	10,0	4,0	77,9	100,9
64,0	**10,0**	**4,0**	**78,0**	**101,0**
64,1	10,0	4,0	78,1	101,1
64,2	10,0	4,0	78,2	101,2
64,3	10,0	4,0	78,3	101,3
64,4	10,0	4,0	78,4	101,4

Body Weight BW in kg	**Add. Weight AW in kg**	**Race Clothing RC in kg**	**Total Weight TW in kg**	**Total with Sled**
64,5	10,0	4,0	78,5	101,5
64,6	10,0	4,0	78,6	101,6
64,7	10,0	4,0	78,7	101,7
64,8	10,0	4,0	78,8	101,8
64,9	10,0	4,0	78,9	101,9
65,0	**10,0**	**4,0**	**79,0**	**102,0**
65,1	9,9	4,0	79,0	102,0
65,2	9,8	4,0	79,0	102,0
65,3	9,7	4,0	79,0	102,0
65,4	9,6	4,0	79,0	102,0
65,5	9,5	4,0	79,0	102,0
65,6	9,4	4,0	79,0	102,0
65,7	9,3	4,0	79,0	102,0
65,8	9,2	4,0	79,0	102,0
65,9	9,1	4,0	79,0	102,0
66,0	**9,0**	**4,0**	**79,0**	**102,0**
66,1	8,9	4,0	79,0	102,0
66,2	8,8	4,0	79,0	102,0
66,3	8,7	4,0	79,0	102,0
66,4	8,6	4,0	79,0	102,0
66,5	8,5	4,0	79,0	102,0
66,6	8,4	4,0	79,0	102,0
66,7	8,3	4,0	79,0	102,0
66,8	8,2	4,0	79,0	102,0
66,9	8,1	4,0	79,0	102,0
67,0	**8,0**	**4,0**	**79,0**	**102,0**
67,1	7,9	4,0	79,0	102,0
67,2	7,8	4,0	79,0	102,0
67,3	7,7	4,0	79,0	102,0
67,4	7,6	4,0	79,0	102,0
67,5	7,5	4,0	79,0	102,0
67,6	7,4	4,0	79,0	102,0

Body Weight BW in kg	**Add. Weight AW in kg**	**Race Clothing RC in kg**	**Total Weight TW in kg**	**Total with Sled**
67,7	7,3	4,0	79,0	102,0
67,8	7,2	4,0	79,0	102,0
67,9	7,1	4,0	79,0	102,0
68,0	**7,0**	**4,0**	**79,0**	**102,0**
68,1	6,9	4,0	79,0	102,0
68,2	6,8	4,0	79,0	102,0
68,3	6,7	4,0	79,0	102,0
68,4	6,6	4,0	79,0	102,0
68,5	6,5	4,0	79,0	102,0
68,6	6,4	4,0	79,0	102,0
68,7	6,3	4,0	79,0	102,0
68,8	6,2	4,0	79,0	102,0
68,9	6,1	4,0	79,0	102,0
69,0	**6,0**	**4,0**	**79,0**	**102,0**
69,1	5,9	4,0	79,0	102,0
69,2	5,8	4,0	79,0	102,0
69,3	5,7	4,0	79,0	102,0
69,4	5,6	4,0	79,0	102,0
69,5	5,5	4,0	79,0	102,0
69,6	5,4	4,0	79,0	102,0
69,7	5,3	4,0	79,0	102,0
69,8	5,2	4,0	79,0	102,0
69,9	5,1	4,0	79,0	102,0
70,0	**5,0**	**4,0**	**79,0**	**102,0**
70,1	4,9	4,0	79,0	102,0
70,2	4,8	4,0	79,0	102,0
70,3	4,7	4,0	79,0	102,0
70,4	4,6	4,0	79,0	102,0
70,5	4,5	4,0	79,0	102,0
70,6	4,4	4,0	79,0	102,0
70,7	4,3	4,0	79,0	102,0
70,8	4,2	4,0	79,0	102,0

Body Weight BW in kg	**Add. Weight AW in kg**	**Race Clothing RC in kg**	**Total Weight TW in kg**	**Total with Sled**
70,9	4,1	4,0	79,0	102,0
71,0	**4,0**	**4,0**	**79,0**	**102,0**
71,1	3,9	4,0	79,0	102,0
71,2	3,8	4,0	79,0	102,0
71,3	3,7	4,0	79,0	102,0
71,4	3,6	4,0	79,0	102,0
71,5	3,5	4,0	79,0	102,0
71,6	3,4	4,0	79,0	102,0
71,7	3,3	4,0	79,0	102,0
71,8	3,2	4,0	79,0	102,0
71,9	3,1	4,0	79,0	102,0
72,0	**3,0**	**4,0**	**79,0**	**102,0**
72,1	2,9	4,0	79,0	102,0
72,2	2,8	4,0	79,0	102,0
72,3	2,7	4,0	79,0	102,0
72,4	2,6	4,0	79,0	102,0
72,5	2,5	4,0	79,0	102,0
72,6	2,4	4,0	79,0	102,0
72,7	2,3	4,0	79,0	102,0
72,8	2,2	4,0	79,0	102,0
72,9	2,1	4,0	79,0	102,0
73,0	**2,0**	**4,0**	**79,0**	**102,0**
73,1	1,9	4,0	79,0	102,0
73,2	1,8	4,0	79,0	102,0
73,3	1,7	4,0	79,0	102,0
73,4	1,6	4,0	79,0	102,0
73,5	1,5	4,0	79,0	102,0
73,6	1,4	4,0	79,0	102,0
73,7	1,3	4,0	79,0	102,0
73,8	1,2	4,0	79,0	102,0
73,9	1,1	4,0	79,0	102,0
74,0	**1,0**	**4,0**	**79,0**	**102,0**

Body Weight BW in kg	**Add. Weight AW in kg**	**Race Clothing RC in kg**	**Total Weight TW in kg**	**Total with Sled**
74,1	0,9	4,0	79,0	102,0
74,2	0,8	4,0	79,0	102,0
74,3	0,7	4,0	79,0	102,0
74,4	0,6	4,0	79,0	102,0
74,5	0,5	4,0	79,0	102,0
74,6	0,4	4,0	79,0	102,0
74,7	0,3	4,0	79,0	102,0
74,8	0,2	4,0	79,0	102,0
74,9	0,1	4,0	79,0	102,0
75,0	**0,0**	**4,0**	**79,0**	**102,0**

Men's doubles:

AW = 75% of the difference between 90 kg and BW (max. 10 kg)

TW = BW + AW + 4 kg RC

Body Weight **BW in kg**	**Additional Weight** **AW in kg**	**Race Clothing** **RC in kg**	**Total Weight** **TW in kg**	**Total** **with Sled**
70,0	**10,0**	**4,0**	**84,0**	**111,0**
70,1	10,0	4,0	84,1	111,1
70,2	10,0	4,0	84,2	111,2
70,3	10,0	4,0	84,3	111,3
70,4	10,0	4,0	84,4	111,4
70,5	10,0	4,0	84,5	111,5
70,6	10,0	4,0	84,6	111,6
70,7	10,0	4,0	84,7	111,7
70,8	10,0	4,0	84,8	111,8
70,9	10,0	4,0	84,9	111,9
71,0	**10,0**	**4,0**	**85,0**	**112,0**
71,1	10,0	4,0	85,1	112,1
71,2	10,0	4,0	85,2	112,2
71,3	10,0	4,0	85,3	112,3
71,4	10,0	4,0	85,4	112,4
71,5	10,0	4,0	85,5	112,5
71,6	10,0	4,0	85,6	112,6
71,7	10,0	4,0	85,7	112,7
71,8	10,0	4,0	85,8	112,8
71,9	10,0	4,0	85,9	112,9
72,0	**10,0**	**4,0**	**86,0**	**113,0**
72,1	10,0	4,0	86,1	113,1
72,2	10,0	4,0	86,2	113,2
72,3	10,0	4,0	86,3	113,3
72,4	10,0	4,0	86,4	113,4
72,5	10,0	4,0	86,5	113,5
72,6	10,0	4,0	86,6	113,6
72,7	10,0	4,0	86,7	113,7

Body Weight BW in kg	**Add. Weight AW in kg**	**Race Clothing RC in kg**	**Total Weight TW in kg**	**Total with Sled**
72,8	10,0	4,0	86,8	113,8
72,9	10,0	4,0	86,9	113,9
73,0	**10,0**	**4,0**	**87,0**	**114,0**
73,1	10,0	4,0	87,1	114,1
73,2	10,0	4,0	87,2	114,2
73,3	10,0	4,0	87,3	114,3
73,4	10,0	4,0	87,4	114,4
73,5	10,0	4,0	87,5	114,5
73,6	10,0	4,0	87,6	114,6
73,7	10,0	4,0	87,7	114,7
73,8	10,0	4,0	87,8	114,8
73,9	10,0	4,0	87,9	114,9
74,0	**10,0**	**4,0**	**88,0**	**115,0**
74,1	10,0	4,0	88,1	115,1
74,2	10,0	4,0	88,2	115,2
74,3	10,0	4,0	88,3	115,3
74,4	10,0	4,0	88,4	115,4
74,5	10,0	4,0	88,5	115,5
74,6	10,0	4,0	88,6	115,6
74,7	10,0	4,0	88,7	115,7
74,8	10,0	4,0	88,8	115,8
74,9	10,0	4,0	88,9	115,9
75,0	**10,0**	**4,0**	**89,0**	**116,0**
75,1	10,0	4,0	89,1	116,1
75,2	10,0	4,0	89,2	116,2
75,3	10,0	4,0	89,3	116,3
75,4	10,0	4,0	89,4	116,4
75,5	10,0	4,0	89,5	116,5
75,6	10,0	4,0	89,6	116,6
75,7	10,0	4,0	89,7	116,7
75,8	10,0	4,0	89,8	116,8
75,9	10,0	4,0	89,9	116,9

Body Weight BW in kg	Add. Weight AW in kg	Race Clothing RC in kg	Total Weight TW in kg	Total with Sled
76,0	**10,0**	**4,0**	**90,0**	**117,0**
76,1	10,0	4,0	90,1	117,1
76,2	10,0	4,0	90,2	117,2
76,3	10,0	4,0	90,3	117,3
76,4	10,0	4,0	90,4	117,4
76,5	10,0	4,0	90,5	117,5
76,6	10,0	4,0	90,6	117,6
76,7	10,0	4,0	90,7	117,7
76,8	9,9	4,0	90,7	117,7
76,9	9,8	4,0	90,7	117,7
77,0	**9,8**	**4,0**	**90,8**	**117,8**
77,1	9,7	4,0	90,8	117,8
77,2	9,6	4,0	90,8	117,8
77,3	9,5	4,0	90,8	117,8
77,4	9,5	4,0	90,9	117,9
77,5	9,4	4,0	90,9	117,9
77,6	9,3	4,0	90,9	117,9
77,7	9,2	4,0	90,9	117,9
77,8	9,2	4,0	91,0	118,0
77,9	9,1	4,0	91,0	118,0
78,0	**9,0**	**4,0**	**91,0**	**118,0**
78,1	8,9	4,0	91,0	118,0
78,2	8,9	4,0	91,1	118,1
78,3	8,8	4,0	91,1	118,1
78,4	8,7	4,0	91,1	118,1
78,5	8,6	4,0	91,1	118,1
78,6	8,6	4,0	91,2	118,2
78,7	8,5	4,0	91,2	118,2
78,8	8,4	4,0	91,2	118,2
78,9	8,3	4,0	91,2	118,2
79,0	**8,3**	**4,0**	**91,3**	**118,3**
79,1	8,2	4,0	91,3	118,3

Body Weight BW in kg	**Add. Weight AW in kg**	**Race Clothing RC in kg**	**Total Weight TW in kg**	**Total with Sled**
79,2	8,1	4,0	91,3	118,3
79,3	8,0	4,0	91,3	118,3
79,4	8,0	4,0	91,4	118,4
79,5	7,9	4,0	91,4	118,4
79,6	7,8	4,0	91,4	118,4
79,7	7,7	4,0	91,4	118,4
79,8	7,7	4,0	91,5	118,5
79,9	7,6	4,0	91,5	118,5
80,0	**7,5**	**4,0**	**91,5**	**118,5**
80,1	7,4	4,0	91,5	118,5
80,2	7,4	4,0	91,6	118,6
80,3	7,3	4,0	91,6	118,6
80,4	7,2	4,0	91,6	118,6
80,5	7,1	4,0	91,6	118,6
80,6	7,1	4,0	91,7	118,7
80,7	7,0	4,0	91,7	118,7
80,8	6,9	4,0	91,7	118,7
80,9	6,8	4,0	91,7	118,7
81,0	**6,8**	**4,0**	**91,8**	**118,8**
81,1	6,7	4,0	91,8	118,8
81,2	6,6	4,0	91,8	118,8
81,3	6,5	4,0	91,8	118,8
81,4	6,5	4,0	91,9	118,9
81,5	6,4	4,0	91,9	118,9
81,6	6,3	4,0	91,9	118,9
81,7	6,2	4,0	91,9	118,9
81,8	6,2	4,0	92,0	119,0
81,9	6,1	4,0	92,0	119,0
82,0	**6,0**	**4,0**	**92,0**	**119,0**
82,1	5,9	4,0	92,0	119,0
82,2	5,9	4,0	92,1	119,1
82,3	5,8	4,0	92,1	119,1

Body Weight BW in kg	**Add. Weight AW in kg**	**Race Clothing RC in kg**	**Total Weight TW in kg**	**Total with Sled**
82,4	5,7	4,0	92,1	119,1
82,5	5,6	4,0	92,1	119,1
82,6	5,6	4,0	92,2	119,2
82,7	5,5	4,0	92,2	119,2
82,8	5,4	4,0	92,2	119,2
82,9	5,3	4,0	92,2	119,2
83,0	**5,3**	**4,0**	**92,3**	**119,3**
83,1	5,2	4,0	92,3	119,3
83,2	5,1	4,0	92,3	119,3
83,3	5,0	4,0	92,3	119,3
83,4	5,0	4,0	92,4	119,4
83,5	4,9	4,0	92,4	119,4
83,6	4,8	4,0	92,4	119,4
83,7	4,7	4,0	92,4	119,4
83,8	4,7	4,0	92,5	119,5
83,9	4,6	4,0	92,5	119,5
84,0	**4,5**	**4,0**	**92,5**	**119,5**
84,1	4,4	4,0	92,5	119,5
84,2	4,4	4,0	92,6	119,6
84,3	4,3	4,0	92,6	119,6
84,4	4,2	4,0	92,6	119,6
84,5	4,1	4,0	92,6	119,6
84,6	4,1	4,0	92,7	119,7
84,7	4,0	4,0	92,7	119,7
84,8	3,9	4,0	92,7	119,7
84,9	3,8	4,0	92,7	119,7
85,0	**3,8**	**4,0**	**92,8**	**119,8**
85,1	3,7	4,0	92,8	119,8
85,2	3,6	4,0	92,8	119,8
85,3	3,5	4,0	92,8	119,8
85,4	3,5	4,0	92,9	119,9
85,5	3,4	4,0	92,9	119,9

Body Weight BW in kg	**Add. Weight AW in kg**	**Race Clothing RC in kg**	**Total Weight TW in kg**	**Total with Sled**
85,6	3,3	4,0	92,9	119,9
85,7	3,2	4,0	92,9	119,9
85,8	3,2	4,0	93,0	120,0
85,9	3,1	4,0	93,0	120,0
86,0	**3,0**	**4,0**	**93,0**	**120,0**
86,1	2,9	4,0	93,0	120,0
86,2	2,9	4,0	93,1	120,1
86,3	2,8	4,0	93,1	120,1
86,4	2,7	4,0	93,1	120,1
86,5	2,6	4,0	93,1	120,1
86,6	2,6	4,0	93,2	120,2
86,7	2,5	4,0	93,2	120,2
86,8	2,4	4,0	93,2	120,2
86,9	2,3	4,0	93,2	120,2
87,0	**2,3**	**4,0**	**93,3**	**120,3**
87,1	2,2	4,0	93,3	120,3
87,2	2,1	4,0	93,3	120,3
87,3	2,0	4,0	93,3	120,3
87,4	2,0	4,0	93,4	120,4
87,5	1,9	4,0	93,4	120,4
87,6	1,8	4,0	93,4	120,4
87,7	1,7	4,0	93,4	120,4
87,8	1,7	4,0	93,5	120,5
87,9	1,6	4,0	93,5	120,5
88,0	**1,5**	**4,0**	**93,5**	**120,5**
88,1	1,4	4,0	93,5	120,5
88,2	1,4	4,0	93,6	120,6
88,3	1,3	4,0	93,6	120,6
88,4	1,2	4,0	93,6	120,6
88,5	1,1	4,0	93,6	120,6
88,6	1,1	4,0	93,7	120,7
88,7	1,0	4,0	93,7	120,7

Body Weight BW in kg	**Add. Weight AW in kg**	**Race Clothing RC in kg**	**Total Weight TW in kg**	**Total with Sled**
88,8	0,9	4,0	93,7	120,7
88,9	0,8	4,0	93,7	120,7
89,0	**0,8**	**4,0**	**93,8**	**120,8**
89,1	0,7	4,0	93,8	120,8
89,2	0,6	4,0	93,8	120,8
89,3	0,5	4,0	93,8	120,8
89,4	0,4	4,0	93,9	120,9
89,5	0,4	4,0	93,9	120,9
89,6	0,3	4,0	93,9	120,9
89,7	0,2	4,0	93,9	120,9
89,8	0,2	4,0	94,0	121,0
89,9	0,1	4,0	94,0	121,0
90,0	**0,0**	**4,0**	**94,0**	**121,0**

Juniors (men):

AW = 75% of the difference between 90 kg and BW (max. 13 kg)

TW = BW + AW + 4 kg RC

Body Weight **BW in kg**	**Additional Weight** **AW in kg**	**Race Clothing** **RC in kg**	**Total Weight** **TW in kg**	**Total** **with Sled**
72,7	13,0	4,0	89,7	112,7
72,8	12,9	4,0	89,7	112,7
72,9	12,8	4,0	89,7	112,7
73,0	**12,8**	**4,0**	**89,8**	**112,8**
73,1	12,7	4,0	89,8	112,8
73,2	12,6	4,0	89,8	112,8
73,3	12,5	4,0	89,8	112,8
73,4	12,5	4,0	89,9	112,9
73,5	12,4	4,0	89,9	112,9
73,6	12,3	4,0	89,9	112,9
73,7	12,2	4,0	89,9	112,9
73,8	12,2	4,0	90,0	113,0
73,9	12,1	4,0	90,0	113,0
74,0	**12,0**	**4,0**	**90,0**	**113,0**
74,1	11,9	4,0	90,0	113,0
74,2	11,9	4,0	90,1	113,1
74,3	11,8	4,0	90,1	113,1
74,4	11,7	4,0	90,1	113,1
74,5	11,6	4,0	90,1	113,1
74,6	11,6	4,0	90,2	113,2
74,7	11,5	4,0	90,2	113,2
74,8	11,4	4,0	90,2	113,2
74,9	11,3	4,0	90,2	113,2
75,0	**11,3**	**4,0**	**90,3**	**113,3**
75,1	11,2	4,0	90,3	113,3
75,2	11,1	4,0	90,3	113,3

Body Weight BW in kg	**Additional Weight AW in kg**	**Race Clothing RC in kg**	**Total Weight TW in kg**	**Total with Sled**
75,3	11,0	4,0	90,3	113,3
75,4	11,0	4,0	90,4	113,4
75,5	10,9	4,0	90,4	113,4
75,6	10,8	4,0	90,4	113,4
75,7	10,7	4,0	90,4	113,4
75,8	10,7	4,0	90,5	113,5
75,9	10,6	4,0	90,5	113,5
76,0	**10,5**	**4,0**	**90,5**	**113,5**
76,1	10,4	4,0	90,5	113,5
76,2	10,4	4,0	90,6	113,6
76,3	10,3	4,0	90,6	113,6
76,4	10,2	4,0	90,6	113,6
76,5	10,1	4,0	90,6	113,6
76,6	10,1	4,0	90,7	113,7
76,7	10,0	4,0	90,7	113,7
76,8	9,9	4,0	90,7	113,7
76,9	9,8	4,0	90,7	113,7
77,0	**9,8**	**4,0**	**90,8**	**113,8**
77,1	9,7	4,0	90,8	113,8
77,2	9,6	4,0	90,8	113,8
77,3	9,5	4,0	90,8	113,8
77,4	9,5	4,0	90,9	113,9
77,5	9,4	4,0	90,9	113,9
77,6	9,3	4,0	90,9	113,9
77,7	9,2	4,0	90,9	113,9
77,8	9,2	4,0	91,0	114,0
77,9	9,1	4,0	91,0	114,0
78,0	**9,0**	**4,0**	**91,0**	**114,0**
78,1	8,9	4,0	91,0	114,0
78,2	8,9	4,0	91,1	114,1
78,3	8,8	4,0	91,1	114,1
78,4	8,7	4,0	91,1	114,1

Body Weight BW in kg	**Additional Weight AW in kg**	**Race Clothing RC in kg**	**Total Weight TW in kg**	**Total with Sled**
78,5	8,6	4,0	91,1	114,1
78,6	8,6	4,0	91,2	114,2
78,7	8,5	4,0	91,2	114,2
78,8	8,4	4,0	91,2	114,2
78,9	8,3	4,0	91,2	114,2
79,0	**8,3**	**4,0**	**91,3**	**114,3**
79,1	8,2	4,0	91,3	114,3
79,2	8,1	4,0	91,3	114,3
79,3	8,0	4,0	91,3	114,3
79,4	8,0	4,0	91,4	114,4
79,5	7,9	4,0	91,4	114,4
79,6	7,8	4,0	91,4	114,4
79,7	7,7	4,0	91,4	114,4
79,8	7,7	4,0	91,5	114,5
79,9	7,6	4,0	91,5	114,5
80,0	**7,5**	**4,0**	**91,5**	**114,5**
80,1	7,4	4,0	91,5	114,5
80,2	7,4	4,0	91,6	114,6
80,3	7,3	4,0	91,6	114,6
80,4	7,2	4,0	91,6	114,6
80,5	7,1	4,0	91,6	114,6
80,6	7,1	4,0	91,7	114,7
80,7	7,0	4,0	91,7	114,7
80,8	6,9	4,0	91,7	114,7
80,9	6,8	4,0	91,7	114,7
81,0	**6,8**	**4,0**	**91,8**	**114,8**
81,1	6,7	4,0	91,8	114,8
81,2	6,6	4,0	91,8	114,8
81,3	6,5	4,0	91,8	114,8
81,4	6,5	4,0	91,9	114,9
81,5	6,4	4,0	91,9	114,9
81,6	6,3	4,0	91,9	114,9

Body Weight BW in kg	**Additional Weight AW in kg**	**Race Clothing RC in kg**	**Total Weight TW in kg**	**Total with Sled**
81,7	6,2	4,0	91,9	114,9
81,8	6,2	4,0	92,0	115,0
81,9	6,1	4,0	92,0	115,0
82,0	**6,0**	**4,0**	**92,0**	**115,0**
82,1	5,9	4,0	92,0	115,0
82,2	5,9	4,0	92,1	115,1
82,3	5,8	4,0	92,1	115,1
82,4	5,7	4,0	92,1	115,1
82,5	5,6	4,0	92,1	115,1
82,6	5,6	4,0	92,2	115,2
82,7	5,5	4,0	92,2	115,2
82,8	5,4	4,0	92,2	115,2
82,9	5,3	4,0	92,2	115,2
83,0	**5,3**	**4,0**	**92,3**	**115,3**
83,1	5,2	4,0	92,3	115,3
83,2	5,1	4,0	92,3	115,3
83,3	5,0	4,0	92,3	115,3
83,4	5,0	4,0	92,4	115,4
83,5	4,9	4,0	92,4	115,4
83,6	4,8	4,0	92,4	115,4
83,7	4,7	4,0	92,4	115,4
83,8	4,7	4,0	92,5	115,5
83,9	4,6	4,0	92,5	115,5
84,0	**4,5**	**4,0**	**92,5**	**115,5**
84,1	4,4	4,0	92,5	115,5
84,2	4,4	4,0	92,6	115,6
84,3	4,3	4,0	92,6	115,6
84,4	4,2	4,0	92,6	115,6
84,5	4,1	4,0	92,6	115,6
84,6	4,1	4,0	92,7	115,7
84,7	4,0	4,0	92,7	115,7
84,8	3,9	4,0	92,7	115,7

Body Weight BW in kg	**Additional Weight AW in kg**	**Race Clothing RC in kg**	**Total Weight TW in kg**	**Total with Sled**
84,9	3,8	4,0	92,7	115,7
85,0	**3,8**	**4,0**	**92,8**	**115,8**
85,1	3,7	4,0	92,8	115,8
85,2	3,6	4,0	92,8	115,8
85,3	3,5	4,0	92,8	115,8
85,4	3,5	4,0	92,9	115,9
85,5	3,4	4,0	92,9	115,9
85,6	3,3	4,0	92,9	115,9
85,7	3,2	4,0	92,9	115,9
85,8	3,2	4,0	93,0	116,0
85,9	3,1	4,0	93,0	116,0
86,0	**3,0**	**4,0**	**93,0**	**116,0**
86,1	2,9	4,0	93,0	116,0
86,2	2,9	4,0	93,1	116,1
86,3	2,8	4,0	93,1	116,1
86,4	2,7	4,0	93,1	116,1
86,5	2,6	4,0	93,1	116,1
86,6	2,6	4,0	93,2	116,2
86,7	2,5	4,0	93,2	116,2
86,8	2,4	4,0	93,2	116,2
86,9	2,3	4,0	93,2	116,2
87,0	**2,3**	**4,0**	**93,3**	**116,3**
87,1	2,2	4,0	93,3	116,3
87,2	2,1	4,0	93,3	116,3
87,3	2,0	4,0	93,3	116,3
87,4	2,0	4,0	93,4	116,4
87,5	1,9	4,0	93,4	116,4
87,6	1,8	4,0	93,4	116,4
87,7	1,7	4,0	93,4	116,4
87,8	1,7	4,0	93,5	116,5
87,9	1,6	4,0	93,5	116,5
88,0	**1,5**	**4,0**	**93,5**	**116,5**

Body Weight BW in kg	**Additional Weight AW in kg**	**Race Clothing RC in kg**	**Total Weight TW in kg**	**Total with Sled**
88,1	1,4	4,0	93,5	116,5
88,2	1,4	4,0	93,6	116,6
88,3	1,3	4,0	93,6	116,6
88,4	1,2	4,0	93,6	116,6
88,5	1,1	4,0	93,6	116,6
88,6	1,1	4,0	93,7	116,7
88,7	1,0	4,0	93,7	116,7
88,8	0,9	4,0	93,7	116,7
88,9	0,8	4,0	93,7	116,7
89,0	**0,8**	**4,0**	**93,8**	**116,8**
89,1	0,7	4,0	93,8	116,8
89,2	0,6	4,0	93,8	116,8
89,3	0,5	4,0	93,8	116,8
89,4	0,5	4,0	93,9	116,9
89,5	0,4	4,0	93,9	116,9
89,6	0,3	4,0	93,9	116,9
89,7	0,2	4,0	93,9	116,9
89,8	0,2	4,0	94,0	117,0
89,9	0,1	4,0	94,0	117,0
90,0	**0,0**	**4,0**	**94,0**	**117,0**

Juniors doubles:

AW = 50% of the difference between 90 kg and BW (max. 10 kg)

TW = BW + AW + 4 kg RC

Body Weight **BW in kg**	**Additional Weight** **AW in kg**	**Race Clothing** **RC in kg**	**Total Weight** **TW in kg**	**Total** **with Sled**
70,0	**10,0**	**4,0**	**84,0**	**111,0**
70,1	9,9	4,0	84,0	111,0
70,2	9,9	4,0	84,1	111,1
70,3	9,8	4,0	84,1	111,1
70,4	9,8	4,0	84,2	111,2
70,5	9,7	4,0	84,2	111,2
70,6	9,7	4,0	84,3	111,3
70,7	9,6	4,0	84,3	111,3
70,8	9,6	4,0	84,4	111,4
70,9	9,5	4,0	84,4	111,4
71,0	**9,5**	**4,0**	**84,5**	**111,5**
71,1	9,4	4,0	84,5	111,5
71,2	9,4	4,0	84,6	111,6
71,3	9,3	4,0	84,6	111,6
71,4	9,3	4,0	84,7	111,7
71,5	9,2	4,0	84,7	111,7
71,6	9,2	4,0	84,8	111,8
71,7	9,1	4,0	84,8	111,8
71,8	9,1	4,0	84,9	111,9
71,9	9,0	4,0	84,9	111,9
72,0	**9,0**	**4,0**	**85,0**	**112,0**
72,1	8,9	4,0	85,0	112,0
72,2	8,9	4,0	85,1	112,1
72,3	8,8	4,0	85,1	112,1
72,4	8,8	4,0	85,2	112,2
72,5	8,7	4,0	85,2	112,2
72,6	8,7	4,0	85,3	112,3
72,7	8,6	4,0	85,3	112,3

Body Weight BW in kg	**Additional Weight AW in kg**	**Race Clothing RC in kg**	**Total Weight TW in kg**	**Total with Sled**
72,8	8,6	4,0	85,4	112,4
72,9	8,5	4,0	85,4	112,4
73,0	**8,5**	**4,0**	**85,5**	**112,5**
73,1	8,4	4,0	85,5	112,5
73,2	8,4	4,0	85,6	112,6
73,3	8,3	4,0	85,6	112,6
73,4	8,3	4,0	85,7	112,7
73,5	8,2	4,0	85,7	112,7
73,6	8,2	4,0	85,8	112,8
73,7	8,1	4,0	85,8	112,8
73,8	8,1	4,0	85,9	112,9
73,9	8,0	4,0	85,9	112,9
74,0	**8,0**	**4,0**	**86,0**	**113,0**
74,1	7,9	4,0	86,0	113,0
74,2	7,9	4,0	86,1	113,1
74,3	7,8	4,0	86,1	113,1
74,4	7,8	4,0	86,2	113,2
74,5	7,7	4,0	86,2	113,2
74,6	7,7	4,0	86,3	113,3
74,7	7,6	4,0	86,3	113,3
74,8	7,6	4,0	86,4	113,4
74,9	7,5	4,0	86,4	113,4
75,0	**7,5**	**4,0**	**86,5**	**113,5**
75,1	7,4	4,0	86,5	113,5
75,2	7,4	4,0	86,6	113,6
75,3	7,3	4,0	86,6	113,6
75,4	7,3	4,0	86,7	113,7
75,5	7,2	4,0	86,7	113,7
75,6	7,2	4,0	86,8	113,8
75,7	7,1	4,0	86,8	113,8
75,8	7,1	4,0	86,9	113,9
75,9	7,0	4,0	86,9	113,9

Body Weight BW in kg	**Additional Weight AW in kg**	**Race Clothing RC in kg**	**Total Weight TW in kg**	**Total with Sled**
76,0	**7,0**	**4,0**	**87,0**	**114,0**
76,1	6,9	4,0	87,0	114,0
76,2	6,9	4,0	87,1	114,1
76,3	6,8	4,0	87,1	114,1
76,4	6,8	4,0	87,2	114,2
76,5	6,7	4,0	87,2	114,2
76,6	6,7	4,0	87,3	114,3
76,7	6,6	4,0	87,3	114,3
76,8	6,6	4,0	87,4	114,4
76,9	6,5	4,0	87,4	114,4
77,0	**6,5**	**4,0**	**87,5**	**114,5**
77,1	6,4	4,0	87,5	114,5
77,2	6,4	4,0	87,6	114,6
77,3	6,3	4,0	87,6	114,6
77,4	6,3	4,0	87,7	114,7
77,5	6,2	4,0	87,7	114,7
77,6	6,2	4,0	87,8	114,8
77,7	6,1	4,0	87,8	114,8
77,8	6,1	4,0	87,9	114,9
77,9	6,0	4,0	87,9	114,9
78,0	**6,0**	**4,0**	**88,0**	**115,0**
78,1	5,9	4,0	88,0	115,0
78,2	5,9	4,0	88,1	115,1
78,3	5,8	4,0	88,1	115,1
78,4	5,8	4,0	88,2	115,2
78,5	5,7	4,0	88,2	115,2
78,6	5,7	4,0	88,3	115,3
78,7	5,6	4,0	88,3	115,3
78,8	5,6	4,0	88,4	115,4
78,9	5,5	4,0	88,4	115,4
79,0	**5,5**	**4,0**	**88,5**	**115,5**
79,1	5,4	4,0	88,5	115,5

Body Weight BW in kg	**Additional Weight AW in kg**	**Race Clothing RC in kg**	**Total Weight TW in kg**	**Total with Sled**
79,2	5,4	4,0	88,6	115,6
79,3	5,3	4,0	88,6	115,6
79,4	5,3	4,0	88,7	115,7
79,5	5,2	4,0	88,7	115,7
79,6	5,2	4,0	88,8	115,8
79,7	5,1	4,0	88,8	115,8
79,8	5,1	4,0	88,9	115,9
79,9	5,0	4,0	88,9	115,9
80,0	**5,0**	**4,0**	**89,0**	**116,0**
80,1	4,9	4,0	89,0	116,0
80,2	4,9	4,0	89,1	116,1
80,3	4,8	4,0	89,1	116,1
80,4	4,8	4,0	89,2	116,2
80,5	4,7	4,0	89,2	116,2
80,6	4,7	4,0	89,3	116,3
80,7	4,6	4,0	89,3	116,3
80,8	4,6	4,0	89,4	116,4
80,9	4,5	4,0	89,4	116,4
81,0	**4,5**	**4,0**	**89,5**	**116,5**
81,1	4,4	4,0	89,5	116,5
81,2	4,4	4,0	89,6	116,6
81,3	4,3	4,0	89,6	116,6
81,4	4,3	4,0	89,7	116,7
81,5	4,2	4,0	89,7	116,7
81,6	4,2	4,0	89,8	116,8
81,7	4,1	4,0	89,8	116,8
81,8	4,1	4,0	89,9	116,9
81,9	4,0	4,0	89,9	116,9
82,0	**4,0**	**4,0**	**90,0**	**117,0**
82,1	3,9	4,0	90,0	117,0
82,2	3,9	4,0	90,1	117,1
82,3	3,8	4,0	90,1	117,1

Body Weight BW in kg	**Additional Weight AW in kg**	**Race Clothing RC in kg**	**Total Weight TW in kg**	**Total with Sled**
82,4	3,8	4,0	90,2	117,2
82,5	3,7	4,0	90,2	117,2
82,6	3,7	4,0	90,3	117,3
82,7	3,6	4,0	90,3	117,3
82,8	3,6	4,0	90,4	117,4
82,9	3,5	4,0	90,4	117,4
83,0	**3,5**	**4,0**	**90,5**	**117,5**
83,1	3,4	4,0	90,5	117,5
83,2	3,4	4,0	90,6	117,6
83,3	3,3	4,0	90,6	117,6
83,4	3,3	4,0	90,7	117,7
83,5	3,2	4,0	90,7	117,7
83,6	3,2	4,0	90,8	117,8
83,7	3,1	4,0	90,8	117,8
83,8	3,1	4,0	90,9	117,9
83,9	3,0	4,0	90,9	117,9
84,0	**3,0**	**4,0**	**91,0**	**118,0**
84,1	2,9	4,0	91,0	118,0
84,2	2,9	4,0	91,1	118,1
84,3	2,8	4,0	91,1	118,1
84,4	2,8	4,0	91,2	118,2
84,5	2,7	4,0	91,2	118,2
84,6	2,7	4,0	91,3	118,3
84,7	2,6	4,0	91,3	118,3
84,8	2,6	4,0	91,4	118,4
84,9	2,5	4,0	91,4	118,4
85,0	**2,5**	**4,0**	**91,5**	**118,5**
85,1	2,4	4,0	91,5	118,5
85,2	2,4	4,0	91,6	118,6
85,3	2,3	4,0	91,6	118,6
85,4	2,3	4,0	91,7	118,7
85,5	2,2	4,0	91,7	118,7

Body Weight BW in kg	**Additional Weight AW in kg**	**Race Clothing RC in kg**	**Total Weight TW in kg**	**Total with Sled**
85,6	2,2	4,0	91,8	118,8
85,7	2,1	4,0	91,8	118,8
85,8	2,1	4,0	91,9	118,9
85,9	2,0	4,0	91,9	118,9
86,0	**2,0**	**4,0**	**92,0**	**119,0**
86,1	1,9	4,0	92,0	119,0
86,2	1,9	4,0	92,1	119,1
86,3	1,8	4,0	92,1	119,1
86,4	1,8	4,0	92,2	119,2
86,5	1,7	4,0	92,2	119,2
86,6	1,7	4,0	92,3	119,3
86,7	1,6	4,0	92,3	119,3
86,8	1,6	4,0	92,4	119,4
86,9	1,5	4,0	92,4	119,4
87,0	**1,5**	**4,0**	**92,5**	**119,5**
87,1	1,4	4,0	92,5	119,5
87,2	1,4	4,0	92,6	119,6
87,3	1,3	4,0	92,6	119,6
87,4	1,3	4,0	92,7	119,7
87,5	1,2	4,0	92,7	119,7
87,6	1,2	4,0	92,8	119,8
87,7	1,1	4,0	92,8	119,8
87,8	1,1	4,0	92,9	119,9
87,9	1,0	4,0	92,9	119,9
88,0	**1,0**	**4,0**	**93,0**	**120,0**
88,1	0,9	4,0	93,0	120,0
88,2	0,9	4,0	93,1	120,1
88,3	0,8	4,0	93,1	120,1
88,4	0,8	4,0	93,2	120,2
88,5	0,7	4,0	93,2	120,2
88,6	0,7	4,0	93,3	120,3
88,7	0,6	4,0	93,3	120,3

Body Weight BW in kg	**Additional Weight AW in kg**	**Race Clothing RC in kg**	**Total Weight TW in kg**	**Total with Sled**
88,8	0,6	4,0	93,4	120,4
88,9	0,5	4,0	93,4	120,4
89,0	**0,5**	**4,0**	**93,5**	**120,5**
89,1	0,4	4,0	93,5	120,5
89,2	0,4	4,0	93,6	120,6
89,3	0,3	4,0	93,6	120,6
89,4	0,3	4,0	93,7	120,7
89,5	0,2	4,0	93,7	120,7
89,6	0,2	4,0	93,8	120,8
89,7	0,1	4,0	93,8	120,8
89,8	0,1	4,0	93,9	120,9
89,9	0,0	4,0	93,9	120,9
90,0	**0,0**	**4,0**	**94,0**	**121,0**

Juniors (women), Youth A men:

AW = 75% of the difference between 75 kg and BW (max. 10 kg)

TW = BW + AW + 4 kg RC

Body Weight **BW in kg**	**Additional Weight** **AW in kg**	**Race Clothing** **RC in kg**	**Total Weight** **TW in kg**	**Total** **with Sled**
61,7	10,0	4,0	75,7	98,7
61,8	9,9	4,0	75,7	98,7
61,9	9,8	4,0	75,7	98,7
62,0	**9,8**	**4,0**	**75,8**	**98,8**
62,1	9,7	4,0	75,8	98,8
62,2	9,6	4,0	75,8	98,8
62,3	9,5	4,0	75,8	98,8
62,4	9,5	4,0	75,9	98,9
62,5	9,4	4,0	75,9	98,9
62,6	9,3	4,0	75,9	98,9
62,7	9,2	4,0	75,9	98,9
62,8	9,2	4,0	76,0	99,0
62,9	9,1	4,0	76,0	99,0
63,0	**9,0**	**4,0**	**76,0**	**99,0**
63,1	8,9	4,0	76,0	99,0
63,2	8,9	4,0	76,1	99,1
63,3	8,8	4,0	76,1	99,1
63,4	8,7	4,0	76,1	99,1
63,5	8,6	4,0	76,1	99,1
63,6	8,6	4,0	76,2	99,2
63,7	8,5	4,0	76,2	99,2
63,8	8,4	4,0	76,2	99,2
63,9	8,3	4,0	76,2	99,2
64,0	**8,3**	**4,0**	**76,3**	**99,3**
64,1	8,2	4,0	76,3	99,3
64,2	8,1	4,0	76,3	99,3
64,3	8,0	4,0	76,3	99,3
64,4	8,0	4,0	76,4	99,4

Body Weight BW in kg	**Add. Weight AW in kg**	**Race Clothing RC in kg**	**Total Weight TW in kg**	**Total with Sled**
64,5	7,9	4,0	76,4	99,4
64,6	7,8	4,0	76,4	99,4
64,7	7,7	4,0	76,4	99,4
64,8	7,7	4,0	76,5	99,5
64,9	7,6	4,0	76,5	99,5
65,0	**7,5**	**4,0**	**76,5**	**99,5**
65,1	7,4	4,0	76,5	99,5
65,2	7,4	4,0	76,6	99,6
65,3	7,3	4,0	76,6	99,6
65,4	7,2	4,0	76,6	99,6
65,5	7,1	4,0	76,6	99,6
65,6	7,1	4,0	76,7	99,7
65,7	7,0	4,0	76,7	99,7
65,8	6,9	4,0	76,7	99,7
65,9	6,8	4,0	76,7	99,7
66,0	**6,8**	**4,0**	**76,8**	**99,8**
66,1	6,7	4,0	76,8	99,8
66,2	6,6	4,0	76,8	99,8
66,3	6,5	4,0	76,8	99,8
66,4	6,5	4,0	76,9	99,9
66,5	6,4	4,0	76,9	99,9
66,6	6,3	4,0	76,9	99,9
66,7	6,2	4,0	76,9	99,9
66,8	6,2	4,0	77,0	100,0
66,9	6,1	4,0	77,0	100,0
67,0	**6,0**	**4,0**	**77,0**	**100,0**
67,1	5,9	4,0	77,0	100,0
67,2	5,9	4,0	77,1	100,1
67,3	5,8	4,0	77,1	100,1
67,4	5,7	4,0	77,1	100,1
67,5	5,6	4,0	77,1	100,1
67,6	5,6	4,0	77,2	100,2
67,7	5,5	4,0	77,2	100,2

Body Weight BW in kg	**Add. Weight AW in kg**	**Race Clothing RC in kg**	**Total Weight TW in kg**	**Total with Sled**
67,8	5,4	4,0	77,2	100,2
67,9	5,3	4,0	77,2	100,2
68,0	**5,3**	**4,0**	**77,3**	**100,3**
68,1	5,2	4,0	77,3	100,3
68,2	5,1	4,0	77,3	100,3
68,3	5,0	4,0	77,3	100,3
68,4	5,0	4,0	77,4	100,4
68,5	4,9	4,0	77,4	100,4
68,6	4,8	4,0	77,4	100,4
68,7	4,7	4,0	77,4	100,4
68,8	4,7	4,0	77,5	100,5
68,9	4,6	4,0	77,5	100,5
69,0	**4,5**	**4,0**	**77,5**	**100,5**
69,1	4,4	4,0	77,5	100,5
69,2	4,4	4,0	77,6	100,6
69,3	4,3	4,0	77,6	100,6
69,4	4,2	4,0	77,6	100,6
69,5	4,1	4,0	77,6	100,6
69,6	4,1	4,0	77,7	100,7
69,7	4,0	4,0	77,7	100,7
69,8	3,9	4,0	77,7	100,7
69,9	3,8	4,0	77,7	100,7
70,0	**3,8**	**4,0**	**77,8**	**100,8**
70,1	3,7	4,0	77,8	100,8
70,2	3,6	4,0	77,8	100,8
70,3	3,5	4,0	77,8	100,8
70,4	3,5	4,0	77,9	100,9
70,5	3,4	4,0	77,9	100,9
70,6	3,3	4,0	77,9	100,9
70,7	3,2	4,0	77,9	100,9
70,8	3,2	4,0	78,0	101,0
70,9	3,1	4,0	78,0	101,0
71,0	**3,0**	**4,0**	**78,0**	**101,0**

Body Weight BW in kg	**Additional Weight AW in kg**	**Race Clothing RC in kg**	**Total Weight TW in kg**	**Total with Sled**
71,1	2,9	4,0	78,0	101,0
71,2	2,9	4,0	78,1	101,1
71,3	2,8	4,0	78,1	101,1
71,4	2,7	4,0	78,1	101,1
71,5	2,6	4,0	78,1	101,1
71,6	2,6	4,0	78,2	101,2
71,7	2,5	4,0	78,2	101,2
71,8	2,4	4,0	78,2	101,2
71,9	2,3	4,0	78,2	101,2
72,0	**2,3**	**4,0**	**78,3**	**101,3**
72,1	2,2	4,0	78,3	101,3
72,2	2,1	4,0	78,3	101,3
72,3	2,0	4,0	78,3	101,3
72,4	2,0	4,0	78,4	101,4
72,5	1,9	4,0	78,4	101,4
72,6	1,8	4,0	78,4	101,4
72,7	1,7	4,0	78,4	101,4
72,8	1,7	4,0	78,5	101,5
72,9	1,6	4,0	78,5	101,5
73,0	**1,5**	**4,0**	**78,5**	**101,5**
73,1	1,4	4,0	78,5	101,5
73,2	1,4	4,0	78,6	101,6
73,3	1,3	4,0	78,6	101,6
73,4	1,2	4,0	78,6	101,6
73,5	1,1	4,0	78,6	101,6
73,6	1,1	4,0	78,7	101,7
73,7	1,0	4,0	78,7	101,7
73,8	0,9	4,0	78,7	101,7
73,9	0,8	4,0	78,7	101,7
74,0	**0,8**	**4,0**	**78,8**	**101,8**
74,1	0,7	4,0	78,8	101,8
74,2	0,6	4,0	78,8	101,8

Body Weight **BW in kg**	**Additional Weight** **AW in kg**	**Race Clothing** **RC in kg**	**Total Weight** **TW in kg**	**Total** **with Sled**
74,3	0,5	4,0	78,8	101,8
74,4	0,5	4,0	78,9	101,9
74,5	0,4	4,0	78,9	101,9
74,6	0,3	4,0	78,9	101,9
74,7	0,2	4,0	78,9	101,9
74,8	0,2	4,0	79,0	102,0
74,9	0,1	4,0	79,0	102,0
75,0	**0,0**	**4,0**	**79,0**	**102,0**

Youth A women:

AW = 50% of the difference between between 70 kg and BW (max. 8 kg)

TW = BW + AW + 4 kg RC

Body Weight **BW in kg**	**Additional Weight** **AW in kg**	**Race Clothing** **RC in kg**	**Total Weight** **TW in kg**	**Total** **with Sled**
54,0	**8,0**	**4,0**	**66,0**	**89,0**
54,1	8,0	4,0	66,1	89,1
54,2	7,9	4,0	66,1	89,1
54,3	7,9	4,0	66,2	89,2
54,4	7,8	4,0	66,2	89,2
54,5	7,8	4,0	66,3	89,3
54,6	7,7	4,0	66,3	89,3
54,7	7,7	4,0	66,4	89,4
54,8	7,6	4,0	66,4	89,4
54,9	7,6	4,0	66,5	89,5
55,0	**7,5**	**4,0**	**66,5**	**89,5**
55,1	7,5	4,0	66,6	89,6
55,2	7,4	4,0	66,6	89,6
55,3	7,4	4,0	66,7	89,7
55,4	7,3	4,0	66,7	89,7
55,5	7,3	4,0	66,8	89,8
55,6	7,2	4,0	66,8	89,8
55,7	7,2	4,0	66,9	89,9
55,8	7,1	4,0	66,9	89,9
55,9	7,1	4,0	67,0	90,0
56,0	**7,0**	**4,0**	**67,0**	**90,0**
56,1	7,0	4,0	67,1	90,1
56,2	6,9	4,0	67,1	90,1
56,3	6,9	4,0	67,2	90,2
56,4	6,8	4,0	67,2	90,2
56,5	6,8	4,0	67,3	90,3
56,6	6,7	4,0	67,3	90,3

Body Weight **BW in kg**	**Additional Weight** **AW in kg**	**Race Clothing** **RC in kg**	**Total Weight** **TW in kg**	**Total** **with Sled**
56,7	6,7	4,0	67,4	90,4
56,8	6,6	4,0	67,4	90,4
56,9	6,6	4,0	67,5	90,5
57,0	**6,5**	**4,0**	**67,5**	**90,5**
57,1	6,5	4,0	67,6	90,6
57,2	6,4	4,0	67,6	90,6
57,3	6,4	4,0	67,7	90,7
57,4	6,3	4,0	67,7	90,7
57,5	6,3	4,0	67,8	90,8
57,6	6,2	4,0	67,8	90,8
57,7	6,2	4,0	67,9	90,9
57,8	6,1	4,0	67,9	90,9
57,9	6,1	4,0	68,0	91,0
58,0	**6,0**	**4,0**	**68,0**	**91,0**
58,1	6,0	4,0	68,1	91,1
58,2	5,9	4,0	68,1	91,1
58,3	5,9	4,0	68,2	91,2
58,4	5,8	4,0	68,2	91,2
58,5	5,8	4,0	68,3	91,3
58,6	5,7	4,0	68,3	91,3
58,7	5,7	4,0	68,4	91,4
58,8	5,6	4,0	68,4	91,4
58,9	5,6	4,0	68,5	91,5
59,0	**5,5**	**4,0**	**68,5**	**91,5**
59,1	5,5	4,0	68,6	91,6
59,2	5,4	4,0	68,6	91,6
59,3	5,4	4,0	68,7	91,7
59,4	5,3	4,0	68,7	91,7
59,5	5,3	4,0	68,8	91,8
59,6	5,2	4,0	68,8	91,8
59,7	5,2	4,0	68,9	91,9
59,8	5,1	4,0	68,9	91,9

Body Weight BW in kg	**Additional Weight AW in kg**	**Race Clothing RC in kg**	**Total Weight TW in kg**	**Total with Sled**
59,9	5,1	4,0	69,0	92,0
60,0	**5,0**	**4,0**	**69,0**	**92,0**
60,1	5,0	4,0	69,1	92,1
60,2	4,9	4,0	69,1	92,1
60,3	4,9	4,0	69,2	92,2
60,4	4,8	4,0	69,2	92,2
60,5	4,8	4,0	69,3	92,3
60,6	4,7	4,0	69,3	92,3
60,7	4,7	4,0	69,4	92,4
60,8	4,6	4,0	69,4	92,4
60,9	4,6	4,0	69,5	92,5
61,0	**4,5**	**4,0**	**69,5**	**92,5**
61,1	4,5	4,0	69,6	92,6
61,2	4,4	4,0	69,6	92,6
61,3	4,4	4,0	69,7	92,7
61,4	4,3	4,0	69,7	92,7
61,5	4,3	4,0	69,8	92,8
61,6	4,2	4,0	69,8	92,8
61,7	4,2	4,0	69,9	92,9
61,8	4,1	4,0	69,9	92,9
61,9	4,1	4,0	70,0	93,0
62,0	**4,0**	**4,0**	**70,0**	**93,0**
62,1	4,0	4,0	70,1	93,1
62,2	3,9	4,0	70,1	93,1
62,3	3,9	4,0	70,2	93,2
62,4	3,8	4,0	70,2	93,2
62,5	3,8	4,0	70,3	93,3
62,6	3,7	4,0	70,3	93,3
62,7	3,7	4,0	70,4	93,4
62,8	3,6	4,0	70,4	93,4
62,9	3,6	4,0	70,5	93,5
63,0	**3,5**	**4,0**	**70,5**	**93,5**

Body Weight **BW in kg**	**Additional Weight** **AW in kg**	**Race Clothing** **RC in kg**	**Total Weight** **TW in kg**	**Total** **with Sled**
63,1	3,5	4,0	70,6	93,6
63,2	3,4	4,0	70,6	93,6
63,3	3,4	4,0	70,7	93,7
63,4	3,3	4,0	70,7	93,7
63,5	3,3	4,0	70,8	93,8
63,6	3,2	4,0	70,8	93,8
63,7	3,2	4,0	70,9	93,9
63,8	3,1	4,0	70,9	93,9
63,9	3,1	4,0	71,0	94,0
64,0	**3,0**	**4,0**	**71,0**	**94,0**
64,1	3,0	4,0	71,1	94,1
64,2	2,9	4,0	71,1	94,1
64,3	2,9	4,0	71,2	94,2
64,4	2,8	4,0	71,2	94,2
64,5	2,8	4,0	71,3	94,3
64,6	2,7	4,0	71,3	94,3
64,7	2,7	4,0	71,4	94,4
64,8	2,6	4,0	71,4	94,4
64,9	2,6	4,0	71,5	94,5
65,0	**2,5**	**4,0**	**71,5**	**94,5**
65,1	2,5	4,0	71,6	94,6
65,2	2,4	4,0	71,6	94,6
65,3	2,4	4,0	71,7	94,7
65,4	2,3	4,0	71,7	94,7
65,5	2,3	4,0	71,8	94,8
65,6	2,2	4,0	71,8	94,8
65,7	2,2	4,0	71,9	94,9
65,8	2,1	4,0	71,9	94,9
65,9	2,1	4,0	72,0	95,0
66,0	**2,0**	**4,0**	**72,0**	**95,0**
66,1	2,0	4,0	72,1	95,1
66,2	1,9	4,0	72,1	95,1

Body Weight **BW in kg**	**Additional Weight** **AW in kg**	**Race Clothing** **RC in kg**	**Total Weight** **TW in kg**	**Total** **with Sled**
66,3	1,9	4,0	72,2	95,2
66,4	1,8	4,0	72,2	95,2
66,5	1,8	4,0	72,3	95,3
66,6	1,7	4,0	72,3	95,3
66,7	1,7	4,0	72,4	95,4
66,8	1,6	4,0	72,4	95,4
66,9	1,6	4,0	72,5	95,5
67,0	**1,5**	**4,0**	**72,5**	**95,5**
67,1	1,5	4,0	72,6	95,6
67,2	1,4	4,0	72,6	95,6
67,3	1,4	4,0	72,7	95,7
67,4	1,3	4,0	72,7	95,7
67,5	1,3	4,0	72,8	95,8
67,6	1,2	4,0	72,8	95,8
67,7	1,2	4,0	72,9	95,9
67,8	1,1	4,0	72,9	95,9
67,9	1,1	4,0	73,0	96,0
68,0	**1,0**	**4,0**	**73,0**	**96,0**
68,1	1,0	4,0	73,1	96,1
68,2	0,9	4,0	73,1	96,1
68,3	0,9	4,0	73,2	96,2
68,4	0,8	4,0	73,2	96,2
68,5	0,8	4,0	73,3	96,3
68,6	0,7	4,0	73,3	96,3
68,7	0,7	4,0	73,4	96,4
68,8	0,6	4,0	73,4	96,4
68,9	0,6	4,0	73,5	96,5
69,0	**0,5**	**4,0**	**73,5**	**96,5**
69,1	0,5	4,0	73,6	96,6
69,2	0,4	4,0	73,6	96,6
69,3	0,4	4,0	73,7	96,7
69,4	0,3	4,0	73,7	96,7

Body Weight **BW in kg**	**Additional Weight** **AW in kg**	**Race Clothing** **RC in kg**	**Total Weight** **TW in kg**	**Total** **with Sled**
69,5	0,3	4,0	73,8	96,8
69,6	0,2	4,0	73,8	96,8
69,7	0,2	4,0	73,9	96,9
69,8	0,1	4,0	73,9	96,9
69,9	0,1	4,0	74,0	97,0
70,0	**0,0**	**4,0**	**74,0**	**97,0**

Youth A Doubles:
AW = 50% of the difference between 75 kg and BW (max. 10 kg)
TW = BW + AW + 4 kg RC

Body Weight **BW in kg**	**Additional Weight** **AW in kg**	**Race Clothing** **RC in kg**	**Total Weight** **TW in kg**	**Total** **with Sled**
55,0	**10,0**	**4,0**	**69,0**	**96,0**
55,1	9,9	4,0	69,0	96,0
55,2	9,9	4,0	69,1	96,1
55,3	9,8	4,0	69,1	96,1
55,4	9,8	4,0	69,2	96,2
55,5	9,7	4,0	69,2	96,2
55,6	9,7	4,0	69,3	96,3
55,7	9,6	4,0	69,3	96,3
55,8	9,6	4,0	69,4	96,4
55,9	9,5	4,0	69,4	96,4
56,0	**9,5**	**4,0**	**69,5**	**96,5**
56,1	9,4	4,0	69,5	96,5
56,2	9,4	4,0	69,6	96,6
56,3	9,3	4,0	69,6	96,6
56,4	9,3	4,0	69,7	96,7
56,5	9,2	4,0	69,7	96,7
56,6	9,2	4,0	69,8	96,8
56,7	9,1	4,0	69,8	96,8
56,8	9,1	4,0	69,9	96,9
56,9	9,0	4,0	69,9	96,9
57,0	**9,0**	**4,0**	**70,0**	**97,0**
57,1	8,9	4,0	70,0	97,0
57,2	8,9	4,0	70,1	97,1
57,3	8,8	4,0	70,1	97,1
57,4	8,8	4,0	70,2	97,2
57,5	8,7	4,0	70,2	97,2
57,6	8,7	4,0	70,3	97,3
57,7	8,6	4,0	70,3	97,3
57,8	8,6	4,0	70,4	97,4

Body Weight **BW in kg**	**Additional Weight** **AW in kg**	**Race Clothing** **RC in kg**	**Total Weight** **TW in kg**	**Total** **with Sled**
57,9	8,5	4,0	70,4	97,4
58,0	**8,5**	**4,0**	**70,5**	**97,5**
58,1	8,4	4,0	70,5	97,5
58,2	8,4	4,0	70,6	97,6
58,3	8,3	4,0	70,6	97,6
58,4	8,3	4,0	70,7	97,7
58,5	8,2	4,0	70,7	97,7
58,6	8,2	4,0	70,8	97,8
58,7	8,1	4,0	70,8	97,8
58,8	8,1	4,0	70,9	97,9
58,9	8,0	4,0	70,9	97,9
59,0	**8,0**	**4,0**	**71,0**	**98,0**
59,1	7,9	4,0	71,0	98,0
59,2	7,9	4,0	71,1	98,1
59,3	7,8	4,0	71,1	98,1
59,4	7,8	4,0	71,2	98,2
59,5	7,7	4,0	71,2	98,2
59,6	7,7	4,0	71,3	98,3
59,7	7,6	4,0	71,3	98,3
59,8	7,6	4,0	71,4	98,4
59,9	7,5	4,0	71,4	98,4
60,0	**7,5**	**4,0**	**71,5**	**98,5**
60,1	7,4	4,0	71,5	98,5
60,2	7,4	4,0	71,6	98,6
60,3	7,3	4,0	71,6	98,6
60,4	7,3	4,0	71,7	98,7
60,5	7,2	4,0	71,7	98,7
60,6	7,2	4,0	71,8	98,8
60,7	7,1	4,0	71,8	98,8
60,8	7,1	4,0	71,9	98,9
60,9	7,0	4,0	71,9	98,9
61,0	**7,0**	**4,0**	**72,0**	**99,0**
61,1	6,9	4,0	72,0	99,0

Body Weight **BW in kg**	**Additional Weight** **AW in kg**	**Race Clothing** **RC in kg**	**Total Weight** **TW in kg**	**Total** **with Sled**
61,2	6,9	4,0	72,1	99,1
61,3	6,8	4,0	72,1	99,1
61,4	6,8	4,0	72,2	99,2
61,5	6,7	4,0	72,2	99,2
61,6	6,7	4,0	72,3	99,3
61,7	6,6	4,0	72,3	99,3
61,8	6,6	4,0	72,4	99,4
61,9	6,5	4,0	72,4	99,4
62,0	**6,5**	**4,0**	**72,5**	**99,5**
62,1	6,4	4,0	72,5	99,5
62,2	6,4	4,0	72,6	99,6
62,3	6,3	4,0	72,6	99,6
62,4	6,3	4,0	72,7	99,7
62,5	6,2	4,0	72,7	99,7
62,6	6,2	4,0	72,8	99,8
62,7	6,1	4,0	72,8	99,8
62,8	6,1	4,0	72,9	99,9
62,9	6,0	4,0	72,9	99,9
63,0	**6,0**	**4,0**	**73,0**	**100,0**
63,1	5,9	4,0	73,0	100,0
63,2	5,9	4,0	73,1	100,1
63,3	5,8	4,0	73,1	100,1
63,4	5,8	4,0	73,2	100,2
63,5	5,7	4,0	73,2	100,2
63,6	5,7	4,0	73,3	100,3
63,7	5,6	4,0	73,3	100,3
63,8	5,6	4,0	73,4	100,4
63,9	5,5	4,0	73,4	100,4
64,0	**5,5**	**4,0**	**73,5**	**100,5**
64,1	5,4	4,0	73,5	100,5
64,2	5,4	4,0	73,6	100,6
64,3	5,3	4,0	73,6	100,6
64,4	5,3	4,0	73,7	100,7

Body Weight BW in kg	**Add. Weight AW in kg**	**Race Clothing RC in kg**	**Total Weight TW in kg**	**Total with Sled**
64,5	5,2	4,0	73,7	100,7
64,6	5,2	4,0	73,8	100,8
64,7	5,1	4,0	73,8	100,8
64,8	5,1	4,0	73,9	100,9
64,9	5,0	4,0	73,9	100,9
65,0	**5,0**	**4,0**	**74,0**	**101,0**
65,1	4,9	4,0	74,0	101,0
65,2	4,9	4,0	74,1	101,1
65,3	4,8	4,0	74,1	101,1
65,4	4,8	4,0	74,2	101,2
65,5	4,7	4,0	74,2	101,2
65,6	4,7	4,0	74,3	101,3
65,7	4,6	4,0	74,3	101,3
65,8	4,6	4,0	74,4	101,4
65,9	4,5	4,0	74,4	101,4
66,0	**4,5**	**4,0**	**74,5**	**101,5**
66,1	4,4	4,0	74,5	101,5
66,2	4,4	4,0	74,6	101,6
66,3	4,3	4,0	74,6	101,6
66,4	4,3	4,0	74,7	101,7
66,5	4,2	4,0	74,7	101,7
66,6	4,2	4,0	74,8	101,8
66,7	4,1	4,0	74,8	101,8
66,8	4,1	4,0	74,9	101,9
66,9	4,0	4,0	74,9	101,9
67,0	**4,0**	**4,0**	**75,0**	**102,0**
67,1	3,9	4,0	75,0	102,0
67,2	3,9	4,0	75,1	102,1
67,3	3,8	4,0	75,1	102,1
67,4	3,8	4,0	75,2	102,2
67,5	3,7	4,0	75,2	102,2
67,6	3,7	4,0	75,3	102,3
67,7	3,6	4,0	75,3	102,3

Body Weight BW in kg	**Add. Weight AW in kg**	**Race Clothing RC in kg**	**Total Weight TW in kg**	**Total with Sled**
67,8	3,6	4,0	75,4	102,4
67,9	3,5	4,0	75,4	102,4
68,0	**3,5**	**4,0**	**75,5**	**102,5**
68,1	3,4	4,0	75,5	102,5
68,2	3,4	4,0	75,6	102,6
68,3	3,3	4,0	75,6	102,6
68,4	3,3	4,0	75,7	102,7
68,5	3,2	4,0	75,7	102,7
68,6	3,2	4,0	75,8	102,8
68,7	3,1	4,0	75,8	102,8
68,8	3,1	4,0	75,9	102,9
68,9	3,0	4,0	75,9	102,9
69,0	**3,0**	**4,0**	**76,0**	**103,0**
69,1	2,9	4,0	76,0	103,0
69,2	2,9	4,0	76,1	103,1
69,3	2,8	4,0	76,1	103,1
69,4	2,8	4,0	76,2	103,2
69,5	2,7	4,0	76,2	103,2
69,6	2,7	4,0	76,3	103,3
69,7	2,6	4,0	76,3	103,3
69,8	2,6	4,0	76,4	103,4
69,9	2,5	4,0	76,4	103,4
70,0	**2,5**	**4,0**	**76,5**	**103,5**
70,1	2,4	4,0	76,5	103,5
70,2	2,4	4,0	76,6	103,6
70,3	2,3	4,0	76,6	103,6
70,4	2,3	4,0	76,7	103,7
70,5	2,2	4,0	76,7	103,7
70,6	2,2	4,0	76,8	103,8
70,7	2,1	4,0	76,8	103,8
70,8	2,1	4,0	76,9	103,9
70,9	2,0	4,0	76,9	103,9
71,0	**2,0**	**4,0**	**77,0**	**104,0**

Body Weight **BW in kg**	**Additional Weight** **AW in kg**	**Race Clothing** **RC in kg**	**Total Weight** **TW in kg**	**Total** **with Sled**
71,1	1,9	4,0	77,0	104,0
71,2	1,9	4,0	77,1	104,1
71,3	1,8	4,0	77,1	104,1
71,4	1,8	4,0	77,2	104,2
71,5	1,7	4,0	77,2	104,2
71,6	1,7	4,0	77,3	104,3
71,7	1,6	4,0	77,3	104,3
71,8	1,6	4,0	77,4	104,4
71,9	1,5	4,0	77,4	104,4
72,0	**1,5**	**4,0**	**77,5**	**104,5**
72,1	1,4	4,0	77,5	104,5
72,2	1,4	4,0	77,6	104,6
72,3	1,3	4,0	77,6	104,6
72,4	1,3	4,0	77,7	104,7
72,5	1,2	4,0	77,7	104,7
72,6	1,2	4,0	77,8	104,8
72,7	1,1	4,0	77,8	104,8
72,8	1,1	4,0	77,9	104,9
72,9	1,0	4,0	77,9	104,9
73,0	**1,0**	**4,0**	**78,0**	**105,0**
73,1	0,9	4,0	78,0	105,0
73,2	0,9	4,0	78,1	105,1
73,3	0,8	4,0	78,1	105,1
73,4	0,8	4,0	78,2	105,2
73,5	0,7	4,0	78,2	105,2
73,6	0,7	4,0	78,3	105,3
73,7	0,6	4,0	78,3	105,3
73,8	0,6	4,0	78,4	105,4
73,9	0,5	4,0	78,4	105,4
74,0	**0,5**	**4,0**	**78,5**	**105,5**
74,1	0,4	4,0	78,5	105,5
74,2	0,4	4,0	78,6	105,6
74,3	0,3	4,0	78,6	105,6

Body Weight **BW in kg**	**Additional Weight** **AW in kg**	**Race Clothing** **RC in kg**	**Total Weight** **TW in kg**	**Total** **with Sled**
74,4	0,3	4,0	78,7	105,7
74,5	0,2	4,0	78,7	105,7
74,6	0,2	4,0	78,8	105,8
74,7	0,1	4,0	78,8	105,8
74,8	0,1	4,0	78,9	105,9
74,9	0,0	4,0	78,9	105,9
75,0	**0,0**	**4,0**	**79,0**	**106,0**

THE INTERNATIONAL SKI COMPETITION RULES (ICR)

BOOK VII
NORDIC COMBINED

APPROVED BY THE 50TH INTERNATIONAL SKI CONGRESS, CANCUN (MEX)

EDITION AUGUST 2016

FÉDÉRATION INTERNATIONALE DE SKI
INTERNATIONAL SKI FEDERATION
INTERNATIONALER SKI VERBAND

INTERNATIONAL SKI FEDERATION
FEDERATION INTERNATIONALE DE SKI
INTERNATIONALER SKI VERBAND

Blochstrasse 2; CH- 3653 Oberhofen / Thunersee; Switzerland

Telephone: +41 (33) 244 61 61
Fax: +41 (33) 244 61 71
Website: www.fis-ski.com

All rights reserved.
© Copyright: International Ski Federation FIS, Oberhofen, Switzerland, 2016.

Printed in Switzerland

Oberhofen, August 2016

Table of Contents

1st Section

200 Joint Regulations for all Competitions ... 3
201 Classification and Types of Competitions ... 3
202 FIS Calendar ... 5
203 Licence to participate in FIS Races (FIS Licence) ... 7
204 Qualification of Competitors ... 8
205 Competitors Obligations and Rights ... 9
206 Advertising and Sponsorship ... 10
207 Competition Equipment and Commercial Markings ... 12
208 Exploitation of Electronic Media Rights ... 13
209 Film Rights ... 17

210 Organisation of Competition ... 17
211 The Organisation ... 17
212 Insurance ... 18
213 Programme ... 18
214 Announcements ... 19
215 Entries ... 19
216 Team Captains' Meetings ... 20
217 Draw ... 20
218 Publication of Results ... 20
219 Prizes ... 22

220 Team Officials, Coaches, Service Personnel, Suppliers and Firms' Representatives ... 22
221 Medical Services, Examinations and Doping ... 23
222 Competition Equipment ... 24
223 Sanctions ... 25
224 Procedural Guidelines ... 26
225 Appeals Commission ... 28
226 Violation of Sanctions ... 29

2nd Section

Joint Regulations for Nordic Combined Competitions ... 31

500 Organisation ... 31
501 The Competition Committee and Officials ... 31
502 The Jury and Competition Management ... 35
503 FIS Officials for Jury and Competition Management ... 36
504 Judges and Referees ... 41
505 Nomination, Reimbursement and Insurance of Competition Officials ... 42
506 Team Captains' Meeting ... 46

510 The Jumping Hill 47
511 Informatin on the Jumping Hills 47
512 Information to the Cross-Country courses 50
513 Working conditions at the Competition areas 51
514 Measuring Devices 53
515 Preparation of the Competition areas 57
516 Information for Spectators and Press 61

520 Competition and Competitors 62
521 Requirements of the Competitors 62
522 Entry 63
523 Draw 64
524 Training before the Competitions 65
525 Competition Realization 66
526 Bibs 71
527 Calculating and Announcement of Results 72
528 Competition Formats 74

530 Sanctions and Protests 75
531 Sanctions 75
532 Protests 77
533 Authorization 77
534 Right of Appeal 77

Special Regulations for the Competition Formats 79

540 Individual Gundersen Competition 79
542 Team Gundersen Competition 81
543 Team-Sprint 81
544 Summer Competitions 82

4th Section

Tables for Nordic Combined Cross-Country 83

550 The Calculation of the Time Difference 83
551 Table Value 84

1st Section

200 Joint Regulations for all Competitions

200.1 All events in the FIS Calendar must be held under the applicable FIS Rules[1].

200.2 Organisation and Conduct

Rules and instructions for the organisation and conduct of the various competitions are to be found in their respective rules.

200.3 Participation

Competitions listed in the FIS Calendar are only open to all properly licensed competitors entered by their National Ski Associations in accordance with current quotas.

200.4 Special Regulations

The FIS Council can authorise a National Ski Association to adopt rules and regulations to organise national or international competitions with different grounds for qualification but only provided that they do not go beyond the limits laid down in the present rules.

200.5 Control

All competitions listed in the FIS Calendar must be supervised by a Technical Delegate of the FIS.

200.6 Every legal sanction imposed and published in respect of a competitor, official or trainer will be recognised by the FIS and the National Ski Associations respectively.

201 Classification and Types of Competitions

201.1 Competitions with Special Rules and/or Limited Participation

National Ski Associations affiliated with the FIS - or clubs belonging to these National Ski Associations with the approval of their association - may invite neighbouring National Ski Associations or their clubs to their own competitions. But these competitions must not be promulgated or announced as international competitions, and the limitation must be made clear in the announcement.

201.1.1 Competitions with special rules and/or limited participation or including non-members may be held under special competition rules as approved by the FIS Council. Any such rules must be published in the announcement.

201.2 Competitions with Non-Members of the FIS

The FIS Council can authorise one of its member National Ski Associations to invite a non-member organisation (military etc.) to competitions, or accept invitations from such an organisation.

[1] Throughout the ICR, the use of the masculine he/his, etc also includes the feminine she/her, etc

201.3 Classification of Competitions

201.3.1 Olympic Winter Games, FIS World Ski Championships and FIS World Junior Ski Championships

201.3.2 FIS World Cups

201.3.3 FIS Continental Cups

201.3.4 International FIS Competitions (FIS Races)

201.3.5 Competitions with Special Participation and/or Qualifications

201.3.6 Competitions with Non-Members of the FIS

201.4 FIS Disciplines

A discipline is a branch of a sport and may comprise one or several events. For example Cross-Country Skiing is a FIS Discipline, whereas the Cross-Country Sprint is an Event.

201.4.1 Recognition of Disciplines in the International Ski Federation

New disciplines, comprising one or several events, widely practised in at least twenty-five countries and on three continents may be included as part of the programme of the International Ski Federation.

201.4.2 Exclusion of Disciplines from the International Ski Federation

If a discipline is no longer practised in at least twelve National Ski Associations on at least two continents the FIS Congress may decide to exclude the discipline from the programme of the International Ski Federation.

201.5 FIS Events

An event is a competition in a sport or in one of its disciplines. It results in a ranking and gives rise to the award of medals and/or diplomas.

201.6 Types of Competitions

International competitions consist of:

201.6.1 Nordic Events

Cross-Country, Rollerskiing, Ski Jumping, Ski Flying, Nordic Combined, Team Competitions in Nordic Combined, Nordic Combined with Rollerskiing or In-line, Team Ski Jumping, Ski Jumping on plastic jumping hills, Popular Cross-Country races

201.6.2 Alpine Events

Downhill, Slalom, Giant Slalom, Super-G, Parallel Competitions, Combined, KO, Team Competitions

201.6.3 Freestyle Ski Events

Moguls, Dual Moguls, Aerials, Ski Cross, Halfpipe, Slopestyle, Big Air, Team Competitions

201.6.4 *Snowboard Events*
Slalom, Parallel Slalom, Giant Slalom, Parallel Giant Slalom, Super-G, Halfpipe, Snowboard Cross, Big Air, Slopestyle, Team Competitions

201.6.5 *Telemark Events*

201.6.6 *Firngleiten*

201.6.7 *Speed Skiing Events*
Speed 1 (S1), Speed Downhill (SDH), Speed Downhill Junior (SDH Jun)

201.6.8 *Grass Ski Events*

201.6.9 *Combined Events with other Sports*

201.6.10 *Youth, Masters, Para Snow Events, etc.*

201.7 FIS World Championship Programme

201.7.1 To be included in the programme of the FIS World Championships, events must have a recognised international standing both numerically and geographically, and have been included for at least two seasons in the World Cup before a decision about their admission can be considered.

201.7.2 Events are admitted no later than three years before specific FIS World Championships.

201.7.3 A single event cannot simultaneously give rise to both an individual and a team ranking.

201.7.4 Medals may only be awarded at the FIS World Championships and FIS Junior World Championships in all disciplines (Alpine, Nordic, Snowboard, Freestyle Ski, Grass Skiing, Rollerski, Telemark, Speed Skiing) when there are a minimum of 8 nations participating in team competitions and 8 nations represented in an individual event.

202 FIS Calendar

202.1 Candidature and Announcement

202.1.1 Each National Ski Association is entitled to present its candidature for the organising of the FIS World Ski Championships in accordance with the published "Rules for the Organisation of World Championships"

202.1.2 For all other competitions, the registrations for inclusion in the International Ski Calendar have to be made to FIS by the National Ski Association according to the Rules for the FIS Calendar Conference published by the FIS.

202.1.2.1 The applications of the National Ski Associations (NSA) are entered byusing the FIS Calendar program in the member section of the FIS website: www.fis-ski.com by 31st August (31st May for the Southern Hemisphere).

202.1.2.2 *Allocation of competitions*

Allocation of the competitions to the National Ski Associations is made through the electronic communication process between FIS and the National Ski Associations. In the case of FIS World Cup competitions, the calendars are subject to the approval of the Council, on proposal of the respective Technical Committee.

202.1.2.3 *Homologations*

Competitions that appear in the FIS Calendar may only take place on competition courses or jumping hills homologated by the FIS.
The homologation certificate number must be indicated when applying for the inclusion of competition in the FIS Calendar.

202.1.2.4 *Publication of the FIS Calendar*

The FIS calendar is published by FIS on the FIS website www.fis-ski.com. It will be updated to reflect cancellations, postponements and other changes continuously by FIS.

202.1.2.5 *Postponements*

In case of the postponement of a competition listed in the FIS Calendar, the FIS has to be informed immediately and a new invitation must be sent to the National Ski Associations, otherwise the competition cannot be considered for FIS points.

202.1.2.6 *Calendar Fees*

In addition to the annual subscription, a calendar fee is set by the FIS Congress and is due for each year and for each event listed in the FIS Calendar. For additional events, a 50% surcharge will be made in addition to the regular calendar fee for applications submitted 30 days before the date of the competition. The calendar fee for a competition that has to be rescheduled remains the responsibility for payment in full of the original organising National Ski Association.

At the beginning of the season, each NSA will receive an invoice for 70 % of its total invoice from the previous season. This amount will be debited from its FIS account. At the end of the season each NSA will receive a detailed invoice for all registered competitions during the season. The balance will be subsequently be debited or credited to the NSA account at FIS.

202.1.3 *Appointment of Race Organiser*

In the event that the National Ski Association appoints a race organiser, such as an affiliated ski club, it shall do so using the form “Registration Form National Ski Association and Organiser” or by means of a similar written agreement. An application by a National Ski Association for inclusion of an event on the International Ski Calendar shall mean that the necessary agreement to organise the event has been established.

202.2 Organisation of Races in other Countries

Competitions which are organised by other National Ski Associations may only be included in the FIS Calendar when the National Ski Association of the country concerned where the competitions will be organised gives its approval.

203 Licence to participate in FIS Races (FIS Licence)

A licence to participate in FIS races is issued by a National Ski Association to competitors who fulfil the criteria for participation through registering the competitor with FIS in the respective discipline(s).

203.1 The FIS licence year begins on July 1st and finishes on June 30th of the following year.

203.2 To be eligible for participation in FIS events, a competitor must have a licence issued by his National Ski Association. Such a licence shall be valid in the Northern and Southern hemispheres for the licence year only. The validity of a licence can be limited to participation in one specific country or in one or more specific events.

203.2.1 The National Ski Association must guarantee that all competitors registered with a FIS License to participate in FIS races accept the Rules of the International Ski Federation, in particular the provision which foresees the exclusive competence of the Court of Arbitration for Sport as the court of appeal in doping cases.

203.3 A National Ski Association may only issue a FIS licence to participate in FIS races when the competitor has proven his nationality and therefore eligibility by submitting a copy of his passport and signed the Athletes Declaration in the form approved by the FIS Council and returned it to his National Ski Association. All forms from under-age applicants must be counter signed by their legal guardians. Both the copy of the passport and signed Athletes Declaration must be made available to FIS on request.

203.4 During the FIS licence year, a competitor may only participate in International FIS competitions with a FIS licence to participate in FIS races issued by one National Ski Association.

203.5 Application for a change of FIS Licence Registration

All applications to change licence registration from one member National Ski Association to another are subject to consideration by the FIS Council at its Meetings in the spring. In principle an application to change licence registration will not be granted unless the competitor demonstrates his personal association with the new nation.

Prior to submitting an application to change licence registration a competitor must possess the citizenship and passport of the country for which he wishes to compete. In addition, the competitor must have had his principal legal and effective place of residence in the new country for a minimum of two (2) years immediately prior to the date of the request to change registration to the new country/National Ski Association. An exception to the two year residency rule may be waived if the competitor was born in the territory of the new country, or whose mother or father is a national of the new country. Applications will not be accepted if a parent has obtained a passport for the new country, but is not resident, and/or there is no family ancestry.

Furthermore the competitor is required to submit a detailed explanation with the application about his personal circumstances and the reason for requesting a change of licence registration.

203.5.1 If a competitor has already participated in FIS calendar events for a National Ski Association, he must have the written agreement to be released from the former National Ski Association in addition to the citizenship, passport and residency requirements in art. 203.5 before the new National Ski Association may submit a request to FIS for a change of registration.
If such a written agreement is not given, the competitor may not participate in any FIS calendar events for a period of twelve months from the end of the last season in which he competed for his present National Ski Association, nor may he be issued with a licence to participate in FIS races by the new National Ski Association.
These rules are also valid when a competitor has more than one nationality and would like to change National Ski Association licence registration.

203.5.2 The FIS Council reserves the right in its absolute discretion, to grant or to decline to grant, a change of licence notwithstanding the fulfilment of the aforementioned conditions where it deems it is contrary to the spirit of the rule and in the best interests of the International Ski Federation to do so (e.g. to decline to grant a change of licence if a member National Ski Association tries to “import” a competitor).

203.5.3 In the event that a competitor does not fulfil all the criteria required to apply for a change of National Ski Association licence registration, the onus shall be on the competitor to demonstrate in writing to the satisfaction of the FIS Council that exceptional circumstances exist and it is in the best interests of the International Ski Federation to grant the change.

203.5.4 A competitor will retain his FIS points if he changes his National Ski Association under the condition that the former National Ski Association granted the release of the competitor.

203.5.5 In the event that any of the documents for an application to change licence registration submitted by the National Ski Association (letter of release from the former National Ski Association, passport, residency papers) are found to be false, the FIS Council will sanction the competitor and the new National Ski Association.

204 Qualification of Competitors

204.1 A National Ski Association shall not support or recognise within its structure, nor shall it issue a licence to participate in FIS or national races to any competitor who:

204.1.1 has conducted himself in an improper or unsportsmanlike manner or has not respected the FIS medical code or anti-doping rules,

204.1.2 accepts or has accepted, directly or indirectly, any money-payments for the participation at competitions,

204.1.3 accepts or has accepted a prize of a higher value than fixed by article 219,

204.1.4 permits or has permitted his name, title or individual picture to be used for advertising, except when the National Ski Association concerned, or its pool

for this purpose, is party to the contract for sponsorship, equipment or advertisements.

204.1.5 knowingly competes or has competed against any skier not eligible according to the FIS Rules, except if:

204.1.5.1 the competition is approved by the FIS Council, is directly controlled by the FIS or by a National Ski Association, and the competition is announced "open",

204.1.6 has not signed the Athletes Declaration,

204.1.7 is under suspension.

204.2 With the issuance of a licence to participate in FIS competitions and entry the National Ski Association confirms, that valid and sufficient accident insurance for training and competition is in place for the competitor and assumes full responsibility.

205 Competitors Obligations and Rights

Competitors whatever their age, gender, race, religion or belief, sexual orientation, ability or disability have the right to participate in snow sports in a secure environment and protected from abuse.
FIS encourages all member nations to develop policies to safeguard and promote the welfare of children and young persons.

205.1 The competitors are obliged to make themselves familiar with the appropriate FIS Rules and must comply with the additional instructions of the Jury. Competitors must also follow the FIS rules regulations.

205.2 Competitors are not permitted to use doping. (see FIS Anti-Doping Rules and Procedural Guidelines).

205.3 As stated in the Athletes Declaration, competitors have the right to inform the Jury of safety concerns they may have regarding the training and competition courses. More details are given in the corresponding discipline rules.

205.4 Competitors who do not attend the prize-giving ceremonies without excuse lose their claim to any prize including prize money.
In exceptional circumstances, the competitor may be represented by another member of his team, but this person has no right to take his place on the podium.

205.5 Competitors must behave in a correct and sportsmanlike manner towards members of the Organising Committee, volunteers, officials and the public.

205.6 Support for the Competitors

205.6.1 A competitor is registered with FIS by his National Ski Association to participate in FIS races may accept:

205.6.2 full compensation for travel cost to training and competition,

205.6.3 full reimbursement for accommodation during training and competitions,

205.6.4 pocket money,

205.6.5 compensation for loss of income according to decisions of his National Ski Association,

205.6.6 social security including insurance for training and competition,

205.6.7 scholarships.

205.7 A National Ski Association may reserve funds to secure a competitor's education and future career after retiring from active competitive skiing.
The competitor has no claim to these funds which shall be dispensed only according to the judgement of his National Ski Association.

205.8 Gambling on Competitions

Competitors, trainers, team officials and technical officials are prohibited from betting on the outcome of competitions in which they are involved.
Reference is made to the FIS Betting and other Anti-Corruption Violations Rules, July 2013.

206 Advertising and Sponsorship

In the context of this rule advertising is considered as the presentation, of signage or other visibility at the venue informing the public of the name of a product or service to achieve awareness of a company or an organisation and its brand name, activities, products or service. On the other hand Sponsorship provides a company with the opportunity to have a direct association with the competition or series of events.

206.1 Olympic Winter Games and FIS World Championships

All Advertising and Sponsorship rights to the Olympic Winter Games and FIS World Championships belong to the IOC and to the FIS respectively and are subject to separate contractual arrangements.

206.2 FIS Events

For all FIS Events the FIS Advertising Rules define the advertising opportunities in the competition area and are subject to the approval of the FIS Council. For the FIS World Cup Events the FIS Advertising Rules form an integral part of the FIS Organisers Agreement with the National Ski Associations and Organisers.

206.3 Member National Ski Associations

Each FIS affiliated National Ski Association that organises events in its country which are included in the FIS calendars, has the authority as the owner of the event advertising rights to enter into contracts for their sale. In the case of FIS World Cup competitions these rights shall be defined in the Organiser Agreement upon approval of the FIS Council and considering the National Ski Associations responsibilities.
In cases where a National Ski Association organises events outside its own country these FIS Advertising rules also apply.

206.4 Title and Presenting Sponsorship Rights

In the case of FIS series approved by the FIS Council, FIS markets the rights of the title/presenting sponsor (alternative naming possible) package. For the FIS World Cup series these are marketed to appropriate sponsors that promote the image and values of the discipline concerned. The revenue generated from the sale of the title/presenting sponsor rights is invested by FIS to provide a professional organisation.

206.5 Use of Markings and supports

All Advertising and commercial markings and supports used shall comply with the technical specifications set forth in the applicable FIS Advertising Rules.

206.6 Advertising Packages

Location, number, size and form of the advertising are specified in the FIS Advertising Rules for each discipline. Detailed information including graphical illustrations is laid out in the discipline-specific Marketing Guides which are published on the FIS Website. The Marketing Guides are reviewed and updated as necessary by the Committee for Advertising Matters and approved by the FIS Council prior to their publication.

206.7 Sponsorships by commercial betting companies

206.7.1 FIS will not allocate Title / Presenting Sponsor rights to commercial betting companies

206.7.2 Sponsorships of events by commercial betting companies is permitted subject to 206.7.3 below.

206.7.3 Advertising of commercial betting companies or other betting activities on or with the athletes (head sponsors, competition suits, starting bibs) is prohibited with the exception of lotteries and companies operating non-sports betting only.

206.8 A National Ski Association or its pool may enter into contracts with a commercial firm or organisation for financial sponsorship and or the supply of goods or equipment if the specific company or organisation is acknowledged as an Official Supplier or Sponsor by the National Ski Association. Advertising using photographs, likeness or names of FIS competitors with any sportsman not eligible according to either the FIS eligibility rules or the eligibility rules of the IOC, is forbidden.
Advertising with or on competitors with tobacco or alcohol products or drugs (narcotics) is forbidden.

206.9 All compensation under such contracts must be made to the National Ski Association or its ski pool which shall receive the compensation subject to the regulations of each National Ski Association. Competitors may not directly receive any part of such compensation except as stated in art. 205.6. The FIS may at any time call for a copy of the contract.

206.10 Equipment goods supplied to and used by the national team must, with reference to markings and trademarks, conform with the specifications stated in art. 207.

207 Competition Equipment and Commercial Markings

207.1 Competition Equipment at FIS Events

Only the competition equipment, according to the FIS rules on advertising, provided by the National Ski Association, complete with the commercial markings approved by the National Ski Association, may be worn in FIS World Cup and FIS World Ski Championships competitions. Obscene names and/or symbols on clothing and equipment are forbidden.

207.1.1 *At FIS World Ski Championships, FIS World Cup and all events on the FIS Calendar, a competitor is not allowed to take equipment (skis,/board, poles, ski boots, helmet, glasses) to the official ceremonies involving anthems and/or flag raising. Holding/carrying equipment on the victory podium after conclusion of the whole ceremony (handing over trophies and medals, national anthems) for press photos, pictures, etc. is however permitted.*

207.1.2 *Winners presentation / Equipment on the podium*

At FIS World Ski Championships and all events of the FIS Calendar, a competitor is allowed to take the following equipment on the podium:

- Skis / Snowboards
- Footwear: The athletes may wear their boots on their feet, but are not allowed to wear them anywhere else (such as around their neck). Other shoes cannot be taken on the podium during presentation except if they are worn on the feet.
- Poles: not on/around skis, normally in the other hand
- Goggles: either worn or around the neck
- Helmet: if worn only on the head and not on another piece of equipment, e.g. skis or poles
- Ski straps: maximum of two with name of the producer of skis; eventually one can be used for a wax company
- Nordic Combined and Cross-Country Ski Poles Clips. A clip can be used to hold the two poles together. The clip can be the width of the two poles, though not wider than 4 cm. The length (height) can be 10 cm. The long side of the clip is to be parallel to the poles. The commercial marking of the pole manufacturer can cover the entire surface of the clip.
- All other accessories are prohibited: waist bags with belt, phones on neckbands, bottles, rucksack/backpack, etc.

207.1.3 An unofficial presentation (flower ceremony) of the winner, and the winners ceremony immediately after the event in the event area with the national anthem even before the protest time has expired, is allowed at the organiser's own risk. Visible wearing of the starting bibs is mandatory.

207.1.4 Visible wearing of the starting bib of the event or other outerwear of the NSA is mandatory in the restricted corridor (including the leader board and TV interview locations).

207.2 Commercial Markings

Specifications about the size, the form and the number of commercial markings on equipment and clothing as well as the by-laws for commercial markings and for advertising are to be reviewed by the Committee for Advertising Matters and approved by the FIS Council each spring for the following competition season and published by the FIS.

207.2.1 The rules governing commercial markings and advertising on equipment and clothing as well as the relevant by-laws published in the Specifications for Competition Equipment/Commercial Markings must be followed.

207.2.2 Any competitor who breaches the advertising rules is subject to sanction, as provided for in art. 223.1.1. An offence for which a sanction may apply and a penalty be imposed is defined as conduct that is in violation or non – observance of competition rules.

207.2.3 If a National Ski Association fails to enforce these rules with on its own competitor(s) or for any reason prefers to refer the case to the FIS, the FIS may take immediate steps to suspend a competitor's licence. The competitor concerned and/or his National Ski Association have the right to make an appeal before a final decision is taken.

207.2.4 If an advertiser uses the name, title or individual picture of a competitor in connection with any advertisement, recommendation or sale of goods without the approval or knowledge of the competitor, the competitor may give a "power of attorney" to his National Ski Association or to the FIS to enable them, if necessary, to take legal action against the company in question. If the competitor concerned fails to do so, the FIS shall judge the situation as if the competitor had given permission to the company.

207.2.5 The FIS Council shall be informed of infractions or breaches of these rules that have taken place with regard to the qualification of competitors, sponsorship and advertising and support for the competitors, and shall review what measures to take to deal with cases.

207.2.6 In all competitions of the FIS Calendar (especially for the FIS World Cups) the "FIS Advertising Guidelines" must be observed in regard to advertising possibilities in the competition area, respectively in the TV area.
These "FIS Advertising Guidelines", approved by the FIS Council, are an integral part of the FIS contracts with cup organisers.

208 Exploitation of Electronic Media Rights

208.1 General Principles

208.1.1 *Olympic Winter Games and FIS World Championships*
All Media rights to the Olympic Winter Games and FIS World Championships belong to the IOC and to the FIS respectively, and are subject to separate contractual arrangements.

208.1.2 *Rights owned by the member National Ski Associations*
Each FIS affiliated National Ski Association that organises events in its country which are included in the annual FIS calendars, has the authority as the owner of the electronic media rights to enter into contracts for the sale of the electronic media rights on those events. In cases where a National Ski Association organises events outside its own country, these rules also apply, subject to bi-lateral agreement with the National Ski Association of the country where the event takes place.

208.1.3 *Promotion*

Contracts shall be prepared in consultation with the FIS with the intention of giving the widest promotion and exposure to the sports of skiing and snowboarding and considering the best interests of the National Ski Associations.

208.1.4 *Access to events*

For all competitions, admission of personnel and their equipment to the media areas will be limited to those having the necessary accreditation and access passes. Priority access will be given to rights holders and the system of accreditation and access control must avoid possible abuse by non-rights holders.

208.1.5 *Control by the FIS Council*

The FIS Council exercises control over the adherence to the principles of this Rule by National Ski Associations and all organisers. Should a contract or individual clauses thereof, create a major conflict of interest for the FIS, a member National Ski Association or its organiser, then this will be evaluated by the FIS Council. Full information will be provided so that the appropriate solution can be found.

208.2 Definitions

In the context of this rule the following definitions will apply:

"Electronic Media Rights" means the rights for Television, Radio, Internet and Mobile devices.

"Television rights" means the distribution of television images, both analogue and digital, comprising video and sound, by means of terrestrial transmitters, satellite, cable, fibre or wire for public and private viewing on television screens. Pay-per-view, subscription, interactive TV, video on demand services, IPTV or similar technologies, are also included in this definition.

"Radio rights" means the distribution and reception of radio programmes, both analogue and digital, over the air, by wire or via cable to devices, both fixed and portable.

"Internet" means access to images and sound through interconnected computer networks.

"Mobile and portable devices" means the provision of images and sound through a telephone operator and receivable on mobile telephone or other non fixed devices, such as Personal Digital Assistants.

208.3 Television

208.3.1 *Standard of production and promotion of competitions*

In the agreements concerning production with a TV organisation or agency acting as host broadcaster, the quality of TV transmissions for ski and snowboard events published in the FIS Calendar – especially for FIS World Cup competitions – must be considered. Of particular importance, while taking into consideration applicable national laws and rules affecting broadcasting, are:

a) Top quality and optimal production of a TV signal (for live or deferred transmission depending on the event) in which sport is the centrepiece;

b) Adequate consideration and appearance of venue advertising and event sponsors;

c) A standard of production in conformity with the FIS TV Production Guidelines and appropriate to current market conditions for the discipline and to the level of the FIS competition series. This means live coverage of the entire event including the winner presentation for live transmission (unless circumstances determine that a live production is not provided). This coverage shall be produced in a neutral way, shall not concentrate on any athlete or nation and shall show all competitors

d) The live international signal of the host broadcaster must include appropriate graphics in English, particularly the official FIS logo, timing and data information and results, and international sound.

e) Where it is appropriate to the individual TV market, there should be live TV transmission in the country where the event takes place and in other countries with a high interest.

208.3.2 *Production and Technical costs*

Except when otherwise agreed between the National Ski Association and the agency/company managing the rights, the cost of producing the television signal for the exploitation of the different rights will be borne by the broadcaster having acquired the rights in the country where the competition takes place or a production company mandated to produce the signal by the company owning the rights. In certain cases, the organiser or the National Ski Association may assume these costs.

For each of the different rights granted under this rule the technical expenses that are to be paid for by those organisations that have acquired the rights and which are seeking to access the television signal (original picture and sound without commentary), have to be agreed between the producing company or the agency/company managing the rights, as applicable. This also applies to any other production costs that may be requested.

208.3.3 *Short extracts*

Short extracts granting news access for non-rights holders are to be provided to television companies according to the following rules. It is noted that in a number of countries national legislation governs the showing of short extracts in news programmes.

These extracts may only be used in regularly scheduled news programmes and cannot be kept for archive purposes

a) In those countries where legislation exists regarding news access to sporting events then this legislation will always hold precedence for reporting on FIS events.

b) In those countries where no legislation exists regarding news access by competing networks and provided that agreements between the company managing the rights and the primary rights holder take precedence then short extracts of a maximum of 90 seconds news access will be granted to competing networks by the agency/company managing the rights for transmission four hours after the rights holding network has shown the competition. The use of this material will cease 48 hours after

the end of the competition. If the rights holding network delays its transmissions by more than 72 hours from the end of the competition, then competing networks can show extracts of a maximum of 45 seconds commencing 48 hours after and ending 72 hours after the event itself. Any request to exploit short extracts shall be addressed to the agency/company managing the rights which shall grant to the broadcasters access to the short extracts subject to agreement regarding the technical costs incurred to receive the material.

c) In those countries where no transmission rights have been purchased by a television company, all television organisations will be able to transmit short extracts of 45 seconds as soon as the material is available, subject to agreement with the agency/company managing the rights regarding the technical costs to be incurred to receive the material. Permission for the use of this material will expire after 48 hours.

d) Short extracts will be produced by the host broadcaster or the agency/ company managing the rights and distributed by that agency/company, taking into consideration 208.3.2 above.

208.4 Radio

The promotion of FIS events through radio programmes will be encouraged by making available accreditation to the principle radio station(s) in each interested country. Access to the venue will be granted solely to those radio organisations that have obtained the necessary contractual authorisation from the rights holder, and will be only for the production of radio (audio) programmes. If accepted by national practice and the authorisation is granted, these programmes can also be distributed on the internet site of the radio station.

208.5 Internet

Unless the contract for the sale of the Electronic Media Rights on FIS events states otherwise, each television rights holder that also acquires the internet rights, will ensure that video streams from its website other than short extracts are geoblocked against access from outside its own territory. Regularly scheduled news bulletins containing material of FIS events may be streamed on the rights holding broadcaster's website, provided no changes are made to the bulletin as transmitted in the original programme.

Video and audio material produced in public areas where accreditation, tickets or other permissions are not required to gain access must not contain race footage. It is recognised that new technology provides members of the public with the possibility to produce unauthorised video recordings that may be posted on websites. Appropriate information advising that the unauthorised production and use of video material is prohibited and that legal proceedings could be taken, will be shown at all entrances and printed on entrance tickets.

All National Ski Associations and the rights holders/agencies will give permission for short extracts to be placed on the FIS website for non-commercial use subject to the following conditions:

a) When short extracts have not been acquired for Internet distribution the maximum duration of the news material from FIS competitions will be 30 seconds per discipline/per session and will be accessible on the FIS

website until 48 hours after the end of the competition. The financial conditions relating to the provision of this material will be agreed between the FIS and the rights owner.

b) The material will be provided by the rights owner or host broadcaster as soon as possible, but at the latest six hours after the end of the competition.

208.6 Mobile and portable devices

In the cases where the rights for distribution by mobile and portable devices have been awarded, the rights purchaser/operator will be free to produce from the television signal the content it considers best meets the needs of its customers. Any live streaming of television programmes on a national basis using these devices shall not be altered from that available through other distribution channels.

In countries where no mobile distribution rights have been sold, short extracts or clips of a maximum duration of 20 seconds will be offered to operators when the material has been produced and for a period of 48 hours on the condition that the operators pay all related technical costs to the agency/company managing the rights.

208.7 Future developments

The principles contained in this Rule 208 shall be the basis for the exploitation of Electronic Media Rights to FIS events in the future. The FIS Council, on the recommendation of the National Ski Associations, the relevant commissions and experts, will establish the conditions considered appropriate to each new development.

209 Film Rights

All agreements regarding film productions of FIS competitions will be between the film producer and the National Ski Association or the company managing the related rights. All contractual arrangements regarding the exploitation of other media rights will be respected.

210 Organisation of Competition

211 The Organisation

211.1 The Organiser

211.1.1 The Organiser of a FIS competition is the person or group of persons who make the necessary preparations and directly carry out the running of the competition in the resort.

211.1.2 If the National Ski Association itself is not the competition organiser, it may appoint an affiliated club to be the organiser.

211.1.3 The organiser must ensure that accredited persons accept the regulations regarding the competition rules and Jury decisions, and in World Cup races the organiser is obliged to obtain the signature of all persons who do not have a valid FIS season accreditation to this effect.

211.2 **The Organising Committee**

The Organising Committee consists of those members (physical or legal) who are delegated by the organiser and by the FIS. It carries the rights, duties and obligations of the organiser.

211.3 Organisers which hold competitions involving competitors not qualified under art. 203 - 204 have violated the International Competition Rules and measures are to be taken against them by the FIS Council.

212 Insurance

212.1 The organiser must take out liability insurance for all members of the Organising Committee. The FIS shall provide its employees and appointed officials, who are not members of the Organising Committee (e.g. equipment controller, medical supervisor, etc.), with liability insurance when they are acting on behalf of the FIS.

212.2 Before the first training day or competition, the organiser must be in possession of a binder or cover notes issued by a recognised insurance company and present it to the Technical Delegate. The Organising Committee requires liability insurance with coverage of at least CHF 1 million; whereby it is recommended that this sum is at least CHF 3 million; this sum can be increased according to decisions of the FIS Council (World Cup etc).
Additionally, the policy must explicitly include liability insurance claims by any accredited participant, including competitors, against any other participant including but not limited to officials, course workers, coaches, etc

212.3 The Organiser respectively its' National Ski Association may request the FIS insurance broker to arrange cover for the competition (at the cost of the Organiser) if the organiser does not have the necessary insurance cover in place.

212.4 All competitors participating in FIS events must carry accident insurance, in sufficient amounts to cover accident, transport and rescue costs including race risks, as well as an appropriate third party liability insurance. The National Associations are responsible for adequate insurance coverage of all their competitors sent and inscribed by them.
The National Ski Association or their competitors must be able to show proof of the respective insurance coverage at any time on request of the FIS, one of its representatives or the organising committee.

212.5 All trainers and officials inscribed and sent to FIS events by a National Association must carry accident and third party liability insurance, in sufficient amounts to cover accident, transport and rescue costs from damages caused. The National Ski Association or their trainers and officials must be able to show proof of the respective insurance coverage at any time on request of the FIS, one of its representatives or the organising committee.

213 Programme

A programme must be published by the organisers for each competition listed in the FIS Calendar which must contain the following:

213.1 name, date and place of the competitions, together with information on the competition sites and the best ways of reaching them,

213.2 technical data on the individual competitions and conditions for participation,

213.3 names of principal officials,

213.4 time and place for the first team captains' meeting and the draw,

213.5 timetable for the beginning of the official training and the start times,

213.6 location of the official notice board,

213.7 time and place for the prize-giving,

213.8 final date of entry and address for entries, including telephone, telefax and e-mail address.

214 Announcements

214.1 The Organising Committee must publish an announcement for the event. It must contain the information required by art. 213.

214.2 Organisers are bound by the rules and decisions of the FIS in limiting the number of entries. A further reduction in entries is possible under art. 201.1 provided it is made clear in the announcement.

214.3 Postponements or cancellations of competitions and programme alterations must be communicated immediately by telephone, e-mail or telefax to the FIS, all invited or entered National Ski Associations and the appointed TD. Competitions moved to an earlier date must be approved by the FIS.

215 Entries

215.1 All entries must be sent so that the Organising Committee receives them before the final date of entry. The organisers must have a final and complete list not later than 24 hours before the first draw.

215.2 National Ski Associations are not permitted to enter and draw the same competitors in more than one competition on the same date.

215.3 Only National Ski Associations are entitled to make entries for international competitions. Every entry should include:

215.3.1 code number, name, first name, year of birth, National Ski Association;

215.3.2 an exact definition of the event for which the entry is made.

215.4 Entries for FIS World Championships (see Rules for the Organisation of FIS World Championships).

215.5 The entry of a competitor by the National Ski Association for a race shall constitute a contract solely between the competitor and the organiser and shall be governed by the Athletes Declaration.

216 Team Captains' Meetings

216.1 The time and location of the first team captains' meeting and of the draw must be shown in the programme. The invitations for all other meetings have to be announced to the team captains at their first meeting. Emergency meetings must be announced in good time.

216.2 Representation by a substitute from another nation during discussions at team captains' meetings is not allowed.

216.3 The team captains and trainers must be accredited by the organisers according to quota.

216.4 Team captains and trainers must obey the ICR and the decisions of the Jury and must behave in a proper and sportsmanlike manner.

217 Draw

217.1 Competitors' starting order for each event and each discipline is decided according to a specific formula by draw and/or point order.

217.2 The competitors entered by a National Ski Association will only be drawn if provided written entries have been received by the organiser before the closing date.

217.3 If a competitor is not represented at the draw by a team captain or trainer, he will only be drawn if it is confirmed by telephone, telegram, e-mail or telefax by the beginning of the meeting that the competitors who are entered will participate.

217.4 Competitors who have been drawn and are not present during the competition must be named by the TD in his report, indicating if possible the reasons for absence.

217.5 Representatives of all the nations taking part must be invited to the draw.

217.6 If a competition has to be postponed by at least one day, the draw must be done again.

218 Publication of Results

218.1 The unofficial and official results will be published in accordance with the rules for the specific event.

218.1.1 *Transmission of Results*

For all international competitions, there must be direct communication between the Start and the Finish. In Olympic Winter Games the communications must be assured by fixed wiring.

In the data service area, access to the internet (at least ADSL speed) is required for World Cup, World Championships and Olympic Winter Games competitions.

218.2 The data and timing generated from all FIS competitions is at the disposal of FIS, the organiser, the National Ski Association and participants for use in their own publications, including websites. Use of data and timing on websites is subject to the conditions laid down in the FIS Internet Policies.

218.3 FIS Internet Policies and Exchange of Data relating to the FIS Competitions

218.3.1 General

As part of the ongoing promotion of skiing and snowboard, the International Ski Federation encourages and appreciates the efforts made by the National Ski Associations to provide messages and information to their members and fans. An increasingly important medium for this provision of information is through the Internet.

The following policy has been established in order to assist National Ski Associations through the provision of data from FIS competitions, and to clarify certain conditions that relate to the use and presentation of the data from FIS competitions.

218.3.2 FIS Calendar data

The online FIS Calendar programme has been developed for the free use of National Ski Associations and is available in the members Section of the FIS website.

218.3.3 Results and Standings

National Ski Associations can obtain official results, after they have been approved by the FIS Points verification procedure at the FIS Office. This data will be available on request to the FIS IT Manager who will provide the necessary instructions and/or routines on a case-by-case basis. The FIS World Cup results will include a credit to the results service providers. Standings from the various Cup series will also be available after receipt from the results service providers in the case of the FIS World Cup, or they have been input manually for other Cup series.

1. The results and data from FIS competitions may only be used on the National Ski Associations', Organisers' and participants' websites and may not be passed on for commercial use to third parties or organisations.
   The National Ski Association may download the data into its' own software for evaluating performances, etc.

2. National Ski Associations who wish to display results on their website, but do not have a database structure to upload the raw data can create a link to the relevant page of the FIS website. The exact addresses can be obtained from the FIS IT Manager.

3. A link will be established from the FIS Website to all National Ski Associations with their own website, as well as the ski industry and relevant media websites on requests. A reciprocal link to the FIS website should also be created.

218.3.4 Organisers access to results

Organisers of FIS World Cup races can obtain official results from their races after they have been approved by the FIS Points verification procedure in the results database. The upload is a computer-automated procedure for World Cup races and takes place immediately after the end of the race.

The pdf file containing the results and standings can be downloaded from www.fis-ski.com followed by the discipline code and the name of the site: AL (Alpine), CC (Cross-Country), JP (Ski Jumping), NK (Nordic Combined); SB (Snowboarding), FS (Freestyle Skiing) etc. The individual competition can be identified by the competition codex as published on the detailed page of the calendar on www.fis-ski.com.

219 Prizes

219.1 The detailed rules concerning the awarding of prizes will be published by the FIS. Prizes shall consist of mementos, diplomas, cheques or cash. Prizes for records are forbidden. The FIS Council decides in the autumn on the minimum respectively maximum values of the prize money approximately one and a half years before the competition season. The organisers have to inform the FIS by October 15th of the amount.

219.2 If two or more competitors finish with the same time or receive the same points, they shall be given the same placing. They will be awarded the same prizes, titles or diplomas. The allocation of titles or prizes by drawing lots or by another competition is not allowed.

219.3 All prizes are to be awarded no later than the final day of a competition or event series.

220 Team Officials, Coaches, Service Personnel, Suppliers and Firms' Representatives

In principle these regulations apply to all disciplines, taking into consideration the special rules.

220.1 The Organising Committee of an event must provide the Technical Delegate with a list of persons accredited to the competition.

220.2 It is forbidden for suppliers and for persons in their service to advertise inside the restricted area or to wear clearly visible commercial markings on their clothing or equipment which do not conform with art. 207.

220.3 Team officials accredited service personnel and suppliers receive from the FIS an official FIS accreditation and must perform their specified function. The individual organisers are free to accredit additional company representatives or other important persons.

220.4 Only persons who have the official FIS accreditation or a special accreditation from the organiser for course or jumping-hill have access to the courses and jumping-hills (according to special rules of the discipline).

220.5 The Different Types of Accreditation

220.5.1 Technical Delegates, the Jury, and the persons mentioned in art. 220 with clearly visible accreditation have access to the courses and jumping-hills.

220.5.2 Servicemen attached to teams are permitted entry to start area and service area at the finish. They are not allowed entry to the courses or jumping-hills.

220.5.3 Company representatives accredited at the discretion of the organisers who do not have FIS accreditation are not permitted entry to the courses and restricted service areas.

221 Medical Services, Examinations and Doping

221.1 National Ski Associations are responsible for the fitness of their competitors to race. All competitors, male and female are required to undergo a thorough evaluation of their medical health. This evaluation is to be conducted within the competitor's own nation.

221.2 If requested by the FIS Medical Committee or its representative, competitors must undergo a medical examination before or after the competition.

221.3 Doping is forbidden. Any offence under these FIS Anti Doping Rules will be punished under the provisions of the FIS Anti-Doping Rules.

221.4 Doping controls may be carried out at any FIS competition (as well as out-of competition). Rules and procedures are published in the FIS Anti-Doping Rules and FIS Procedural Guidelines.

221.5 Gender of the Competitor

If any question or protest arises as to the gender of the competitor, FIS shall assume responsibility for taking the necessary steps to determine the gender of the competitor.

221.6 Medical Services Required from Event Organisers

The health and safety of all those involved in a FIS competition is a primary concern of all event Organisers. This includes the competitors as well as volunteers, course workers and spectators.

The specific composition of the medical support system is dependent on several variables:

- The size, level, type of the event being held (World Championships, World Cup, Continental Cup, FIS-level, etc.) together with the local medical standards of care and geographic locations and circumstances.
- The estimated number of competitors, support staff and spectators
- The scope of responsibility for the Event Medical Organisation (competitors, support staff, spectators) should also be determined.

The Organiser / The Chief of Medical and Rescue Services must confirm with the race director or technical delegate that the required rescue facilities are in place before starting the official training or competition. In the event of an incident, or issue that prevents the primary medical plan from being utilized, the back up plan must be in place before recommencing the official training or competition.

The specific requirements concerning facilities, resources, personnel and team physicians are contained in the respective discipline rules and the FIS Medical Guide.

222 Competition Equipment

222.1 A competitor may only take part in a FIS competition with equipment which conforms to the FIS Regulations. A competitor is responsible for the equipment that he uses (skis, snowboard, bindings, ski boots, suit, etc). It is his duty to check that the equipment he uses conforms to the FIS specifications and general safety requirements and is in working order.

222.2 The term competition equipment encompasses all items of equipment which the competitor uses in competitions. This includes clothing as well as apparatus with technical functions. The entire competition equipment forms a functional unit.

222.3 All new developments in the field of competition equipment must be approved in principle by the FIS.
The FIS does not take any responsibility for the approval of new technical developments, which at the time of introduction may contain unknown risk to the health or cause an increase in the risk of accidents.

222.4 New developments must be submitted by May 1st, at the latest, for the following season. The first year new developments can only be approved provisionally for the following season and must be finally confirmed prior to the subsequent competition season.

222.5 The Committee for Competition Equipment publishes equipment by-laws after approval by the FIS Council (definitions or descriptions of the equipment items which are allowed).
In principle unnatural or artificial aids which modify the performance of the competitors and/or constitute a technical correction of the individual's physical predisposition to a defective performance, as well as competition equipment which impact the health of the competitors or increase the risk of accidents are to be excluded.

222.6 Controls

Before and during the competition season or on submission of protests to the Technical Delegate at the competition concerned, various controls can be carried out by members of the Committee for Competition Equipment or official FIS Equipment Controllers. Should there be a well-founded suspicion that regulations were violated, the equipment items must be confiscated immediately by the controllers or Technical Delegates in the presence of witnesses and be forwarded sealed to the FIS, which will submit the items to a final control by an officially recognised institution. In cases of protest against items of the competition equipment, the losing party will bear the investigation costs.
No testing of equipment or material in independent laboratories may be requested at races where a FIS Technical Expert has performed the controls, unless it can be demonstrated that the controls have not been carried out according to the rules.

222.6.1 At all FIS events where official FIS measurement experts using the official FIS measurement tools are appointed, the result of measurements carried out at the time are valid and final, irrespective of previous measurements.

223 Sanctions

223.1 General Conditions

223.1.1 *An offence for which a sanction may apply and a penalty be imposed is defined as conduct that:*

- is in violation or non-observance of competition rules, or
- constitutes non-compliance with directives of the jury or individual members of the jury in accordance with 224.2 or
- constitutes unsportsmanlike behaviour

223.1.2 *The following conduct shall also be considered an offence:*

- attempting to commit an offence
- causing or facilitating others to commit an offence
- counselling others to commit an offence

223.1.3 *In determining whether conduct constitutes an offence consideration should be given to:*

- whether the conduct was intentional or unintentional,
- whether the conduct arose from circumstances of an emergency

223.1.4 All FIS affiliated associations, including their members registered for accreditation, shall accept and acknowledge these rules and sanctions imposed, subject only to the right to appeal pursuant to the FIS Statutes and ICR

223.2 Applicability

223.2.1 *Persons*

These sanctions apply to:

- all persons who are registered with or accredited by the FIS or the organiser of an event published in the FIS calendar (an event) both within and outwith the confines of the competition area and any location connected with the competition, and
- all persons who are not accredited, within the confines of the competition area

223.3 Penalties

223.3.1 *The commission of an offence may subject a person to the following penalties:*

- Reprimand - written or verbal
- Withdrawal of accreditation
- Denial of accreditation
- Monetary fine not more than CHF 100’000.--
- A time penalty

223.3.1.1 FIS-affiliated associations are liable to the FIS for the payment of any fines and incurred administrative expenses imposed on persons whose registration or accreditation they arranged.

223.3.1.2 Persons not subject 223.3.1.1 also are liable to the FIS for fines and incurred administrative expenses. If such persons do not pay these fines, they shall

be subject to a withdrawal of any permission to apply for accreditation to FIS events for a period of one year.

223.3.1.3 Payment of fines is due within 8 (eight) days following their imposition.

223.3.2 *All competing competitors may be subject to the following additional penalties:*

- Disqualification
- Impairment of their starting position
- Forfeiture of prizes and benefits in favour of the organiser
- Suspension from FIS events

223.3.3 A competitor shall only be disqualified if his mistake would result in an advantage for him with regard to the end result, unless the Rules state otherwise in an individual case.

223.4 A jury may impose the penalties provided in 223.3.1 and 223.3.2, however they may not impose a monetary fine of more than CHF 5'000.-- or suspend a competitor beyond the FIS event at which the offence occurred.

223.5 The following Penalty decisions may be given verbally:

- reprimands
- the withdrawal of accreditation for the current event from persons who had not been registered with the organiser through their National Associations
- the withdrawal of the accreditation for the current event from FIS-accredited persons
- the denial of accreditation to the current event from persons who are within the confines of the competition area or any other location connected with the competition.

223.6 The following Penalty decisions shall be in writing:

- monetary fines
- disqualification
- impaired starting position
- competition suspensions
- withdrawal of accreditation from persons who had been registered through their National Association
- withdrawal of accreditation of FIS accredited persons

223.7 Written Penalty decisions must be sent to the offender (if it is not a competitor), the offender’s National Association and the Secretary General of FIS.

223.8 Any disqualification shall be recorded in the Referee’s and/or the TD`s Report.

223.9 All penalties shall be recorded in the TD's Report.

224 Procedural Guidelines

224.1 Competence of Jury

The Jury at the event has the right to impose sanctions according to the above rules by majority vote. In the case of a tie, the chairman of the Jury has the deciding vote.

224.2 Within the location, especially during the training and the competition period, each voting Jury member is authorised to issue oral reprimands and withdraw the accreditation which is issued for the current event.

224.3 Collective Offences

If several persons commit the same offence at the same time and under the same circumstances, the Jury's decision as to one offender may be considered binding upon all offenders. The written decision shall include the names of all offenders concerned, and the scope of the penalty to be assessed upon each of them. The decision will be delivered to each offender.

224.4 Limitation

A person shall not be sanctioned if proceedings to invoke such sanction have not been commenced against that person within 72 hours following the offence.

224.5 Each person who is a witness to an alleged offence is required to testify at any hearing called by the Jury, and the Jury is required to consider all relevant evidence.

224.5 Each person who is a witness to an alleged offence is required to testify at any hearing called by the Jury, and the Jury is required to consider all relevant evidence.

224.6 The Jury may confiscate objects that are suspected of being used in violation of equipment guidelines.

224.7 Prior to the imposition of a penalty (except in cases of reprimands and withdrawal of accreditation according to 223.5 and 224.2), the person accused of an offence shall be given the opportunity to present a defence at a hearing, orally or in writing.

224.8 All Jury decisions shall be recorded in writing and shall include:

224.8.1 The offence alleged to have been committed

224.8.2 The evidence of the offence

224.8.3 The rule (s) or Jury directives that have been violated

224.8.4 The penalty imposed.

224.9 The penalty shall be appropriate to the offence. The scope of any penalty imposed by the Jury must consider any mitigating and aggravating circumstances.

224.10 Remedies

224.10.1 Except as provided for in 224.11, a penalty decision of the Jury may be appealed in accordance with the provisions in the ICR.

224.10.2 If an appeal is not filed within the deadline established in the ICR, the penalty decision of the Jury becomes final.

224.11 **The following decisions of the Jury are not subject to appeal:**

224.11.1 Oral penalties imposed under 223.5 and 224.2

224.11.2 Monetary fines less than CHF 1'000 (One Thousand Swiss Francs) for single offence and a further CHF 2'500 for repeated offences by the same person.

224.12 In all remaining cases, appeals are to be directed to the Appeals Commission, as per the ICR.

224.13 The Jury shall have the right to submit to the Appeals Commission recommendations for penalties in excess of monetary fines of CHF 5'000.- and suspensions beyond the event in which the offence occurred (223.4).

224.14 FIS Council shall have the right to submit to the Appeals Commission comments with respect to any written penalty decisions by the Jury.

224.15 **Costs of Proceedings**

Fees and cash expenses, including travel expenses (costs of the proceedings) are to be calculated comparable to costs paid to TD's and are to be paid by the offender. In the case of a reversal of Jury decisions, in whole or in part, the FIS covers all costs.

224.16 **Enforcement of Monetary Fines**

224.16.1 The FIS oversees the enforcement of monetary fines and the costs of proceedings. Enforcement costs are considered costs of the proceedings.

224.16.2 Any outstanding monetary fines imposed on an offender is considered a debt of the National Association to which the offender is a member.

224.17 **Benefit Fund**

All monetary fines are paid into the FIS Youth Promotion Fund.

224.18 These rules are not applicable to any violation of FIS Doping rules.

225 Appeals Commission

225.1 **Appointments**

225.1.1 The FIS Council shall appoint from the Discipline Sub-committee for Rules (or Discipline Committee if there is no Rules Sub-Committee) a Chairman and a Vice Chairman of the Appeals Commission. The Vice Chairman shall preside when the Chairman is either unavailable or is disqualified for bias and prejudice.

225.1.2 The Chairman shall appoint 3 members, which may include himself, to the Appeals Commission from the Discipline Rules Sub-Committee or Discipline Committee for each case appealed or submitted to be heard, whose decisions shall be by majority vote.

225.1.3 To avoid either actual bias and prejudice or the appearance of bias and prejudice, members appointed to an Appeals Commission shall not be members of the same National Association as the offender whose case is under appeal. In addition, members appointed to an Appeals Commission must report voluntarily to the Chairman any bias and prejudice they may hold for or against the offender. Persons who are biased and prejudiced shall be dis-

qualified from serving on the Appeals Commission by the Chairman or, in the event the Chairman is disqualified, by the Vice Chairman.

225.2 Responsibility

225.2.1 The Appeals Commission shall only hold hearings with respect to appeals by offenders or by the FIS Council from decisions of competition juries, or matters referred to it by competition juries recommending penalties in excess of those provided for in the Sanction rules.

225.3 Procedures

225.3.1 The Appeal must be decided within 72 hours of receipt of the Appeal by the Chairman, unless all parties involved in the Appeal agree in writing to an extension of time for the hearing.

225.3.2 All appeals and responses must be submitted in writing, including any evidence the parties intend to offer in support of or in response to the Appeal.

225.3.3 The Appeals Commission shall decide on the location and format for the Appeal (phone conference, in person, e-mail exchanges).
The Appeals Commission members are required to respect the confidentiality of the appeal until the decision is made public and to consult only with the other members of the panel during the deliberations.

The Chairman of the Appeals Commission may request additional evidence from any of the parties involved, providing this does not require disproportionate means.

225.3.4 The Appeals Commission shall allocate costs of the appeal pursuant to 224.15.

225.3.5 Decisions of the Appeals Commission may be announced orally at the conclusion of the deliberations or hearing should one take place. The decision, together with its reasoning, shall be submitted in writing to the FIS, which shall deliver them to the parties involved, their National Associations and all members of the Jury whose decision was appealed. In addition, the written decision shall be available at the FIS Office.

225.4 Further Appeals

225.4.1 Decisions of the Appeals Commission may be appealed to the FIS Court in accordance with Article 52; 52.1 and 52.2 of the Statutes.

225.4.2 Appeals to the FIS Court shall be in writing and submitted to the FIS Secretary-General in accordance with the time limits prescribed in Article 52; 52.1 and 52.2 of the Statutes from the date of the publication of the Appeals Commission decision.

225.4.3 An Appeal to the Appeals Commission or to the FIS Court will not delay the implementation of any penalty decision of the Competition Jury, Appeals Commission or Council.

226 Violation of Sanctions

Where there is a violation of a sanction that has been imposed (according to ICR 223 or the FIS Anti-Doping Rules, the Council may impose such further and other sanctions that it considers appropriate.
In such cases, some or all of the following sanctions may apply:

226.1 **Sanctions against individuals involved:**

- a written reprimand;

and/or

- a monetary fine not to exceed the sum of CHF 100'000.--

and/or

- competition suspension at the next level of sanction - for example if a three month suspension for a doping offence was imposed, a violation of the suspension will cause a two year suspension; if a two year suspension for a doping offence was imposed, a violation of the suspension will cause a lifetime suspension;

and/or

- withdrawal of accreditation from individuals involved.

226.2 **Sanctions against a National Ski Association**

- withdrawal of FIS funding to the National Ski Association;

and/or

- cancellation of future FIS events in the country involved;

and/or

- withdrawal of some or all FIS membership rights, including participation in all FIS calendar competitions, voting rights at the FIS Congress, membership of FIS Committees.

2nd Section

Joint Regulations for Nordic Combined Competitions

500 Organisation

501 The Competition Committee and Officials

501.1 Members

– the chief of competition
– the competition secretary
– the chief of hill
– the chief distance measurer
– the chief of calculations
– the chief of course
– the chief of timekeeping
– the chief of stadium and competition control
– the chief of security
– the chief of technical facilities
– the chief of equipment and
– the chief of first aid services

Additional officials may be appointed to the Competition Committee as specific needs arise.

501.2 The Officials and their Duties

501.2.1 *The Chief of Competition*
is responsible for the preparation of all technical and administrative aspects of the competition. He directs, controls and monitors the work of all officials. He chairs the Team Captains' Meeting in coordination with the Technical Delegate (TD) / Race Director (RD).
He directs on assignment of the Jury the technical aspects during both official trainings and the competition.

501.2.2 *The Competition Secretary*
is responsible for all administrative and secretarial work associated with the competition and is in charge of preparing for other officials all forms, lists, and tables, including start lists, results lists, minutes of the team captains meeting, and informational bulletins on the competition. The competition secretary also accepts any protests arising from the competition and works as secretary of the Jury.

501.2.3 *The Chief of Hill*
is responsible for the preparation of the jumping hill. He coordinates and controls the work of the chief of the inrun and the chief of the landing area.

During both training and the competition he remains in continual contact with the chief of the competition and keeps him informed about hill conditions.

501.2.4 *The Starter*

is responsible to ensure that all participants start from the designated start place in the proper order and within the designated start time.
Whenever a competitor violates the rule for the starting procedure, the starter must immediately report to the Jury.
At OWG and WSC there is an additional start referee. He has to supervise that the starting procedure is carried out correctly and controls any infringements. He has to ensure that no unauthorized persons are present in the start area.
He has authority over the starter and his assistant.

501.2.5 *The Chief of the Inrun*

is responsible for the preparation of the takeoff and the inrun.
He ensures for a high quality of the prepared (mechanical or manual) inrun track and secures the presence of sufficient equipments to clean the inrun track by special conditions (e.g. strong snow fall).
During the competition, the chief of the inrun observes and controls the entire length of the inrun. In the case of a fall or an obstruction on the inrun, the Jury uses information from the chief of the inrun to determine whether to allow the competitor a re-jump.
On jumping hills not equipped with automatic start lights, the chief of the inrun must position an assistant at the takeoff to give the signal that the hill is clear. This assistant receives the signal to open the jump from the chief of competition.

501.2.6 *The Chief of the Landing Area*

is responsible for preparing the landing slope and the outrun area with manual packing and grooming techniques with suitable skis (alpine skis) or mechanical equipment.

501.2.7 *The Chief of Forejumpers*

has the responsibility, immediately prior to the start of training and the competition and at all times during the competition to organize and coordinate the experimental test of inrun length. In situations of changing environmental weather conditions (snow) during the competition he must ensure that forejumpers keep the inrun track open and clear of snow.
This official must work closely with the chief of hill and chief of competition to determine how many forejumpers will be needed and on what occasions they will be used.
The organiser is responsible for the arrangement of eight (8) qualified forejumpers on each day. These jumpers may not be part of the official competition but must be entered by their National Ski Association according to ICR art. 215. All of them must be capable to start from the starting point established by the Jury for the competition round. The Jury may appoint additional forejumpers from non qualified competitors.

501.2.8 The Chief Distance Measurer

The responsibilities of this position are as follows:

- the correct placement of the distance markings on both sides of the landing hill (art. 514.1.1)
- the placement of measurers according to ICR Rules and of the distance recorder (art. 514.1.3).

The chief distance measurer must supervise the efforts of distance measurers. He must arrange the measurers in such an order that the least experienced and skilled are situated above the P point of the landing hill. He must constantly oversee the reporting by measurers of the distances jumped and the communication of these distances to calculations personnel and the public announcer.

Before the competition, the chief distance measurer shall instruct distance measurers in the measuring techniques to be used.

It is mandatory for each distance measurer to be present during the training prior to the competition in order to receive the instruction of the chief distance measurer. Non-participation during this training shall bar the measurer from acting in the role as a measurer for the competition.

501.2.9 The Chief of Calculations

is responsible for the calculation of the results. Together with his assistants the chief of calculations is responsible for the quick collection of the basic scoring data and making a quick and correct calculation. With the Chief of timekeeping he is responsible for the official final result.

501.2.10 The Chief of Course

is responsible for a optimal course preparation and has the knowledge how to use the course preparation equipment related to different snow conditions. He should be familiar with the course homologation requirements.

He is responsible for the preparation of the ski-testing areas, warm-up tracks, the marking and fencing of the course, temperature measurements, first aid posts, feeding stations, and for providing the facilities for intermediate timing.

He uses the course preparation groups and the forerunners to ensure the course is in the best possible condition and he must send at least two course closers or a vehicle around the course after the last competitor.

501.2.11 The Chief of Timekeeping

is responsible for the direction and coordination of the officials working in the timing area. He supervises manual timers, electronic timers, intermediate timekeepers and calculations officials' work. He coordinates the work of the starter, the finish referee and the finish controller with the chief of stadium. He supervises the data processing services and supports the distribution and collecting of transponders.

501.2.12 The Chief of Stadium and Competition control

is responsible for all activities in the stadium area and the controllers along the course. This includes flow of competitors to the start and flow from the finish area. He is responsible to provide fencing, course markings and signs in the stadium area, to coordinate the placement of the start and finish lines with the chief of timekeeping.

He decides together with the chief of competition and the TD on the suitable placing of controllers, he informs the controllers of their duties and equips controllers with control cards and other material that may be necessary and assigns them to their locations. After the competition he must collect all pertinent information and control cards and reports any incidents to the Jury.
He coordinates with the chief of control and competition security for the effective stadium access and control for competitors, coaches, service personnel and the media.

501.2.13 *The Chief of Security*

is responsible for ensuring that persons not involved in running the competition are kept at a safe distance from the specified area and zones so that the competitors, competition officials and additional officials with accreditation do not interfere with or disturb the work of the officials. He ensures that only authorized personnel are allowed access to specified area and zones at the competition area. He coordinates his activities with the chief of stadium, chief of hill and the chief of course. For OWG, WSC, WC-NC and JWSC competitions, he is responsible for security and access into and along the course, in team preparation areas and in the stadium area.

501.2.14 *The Chief of Technical Facilities*

is responsible for the control and orderly functioning of all technical systems and devices used during the competition. This official shall ensure that the following are functioning properly:

- devices to measure and display the jumping distances, the inrun and wind velocities
- internal telephone or radio communication lines
- the electronic-scoreboard display of start numbers, distances jumped, style points, and overall points of each participant.
- the start and finish equipments
- loudspeakers at the competition area
- all systems of artificial inrun cooling

501.2.15 *The Chief of Equipment*

is responsible for supplying proper equipment and competition support items to the chief of competition. The chief of equipment must also work closely with the chief of competition before the competition to make sure that the proper equipment and tools will be on hand during the competition.

501.2.16 *The Chief of Medical and Rescue Service*

is responsible for the treatment of first aid for everyone at both the official training and the competition – competitors, spectators, officials, etc. This official is also responsible for establishing emergency procedures for transportation to a medical facility. Specific responsibilities include ensuring that proper medical teams and the necessary medical equipment are present during both official training and the competition (at the jumping hill and the Cross-Country area). Details of the Medical Support Requirements are given in chapter 1 of the FIS Medical Guide containing Medical Rules and Guidelines.

502 The Jury and Competition Management

502.1 The Jury

502.1.1 *The Jury consists of the following members:*

– the Technical Delegate (TD) as chairman
– the Chief of Competition
– the Assistant of the TD

502.1.2 The Duties of the Jury

The Jury must ensure that the entire competition, including the official training sessions, are organised and carried out in accordance with the Rules of the International Competition Rules (ICR).
The Jury must decide:

- The need to interrupt, postpone or cancel the competition.
- All protests, disqualifications, sanctions and questions that occur during the competition and are not covered or not covered completely by the ICR Rules and Regulations.
- The checking and recognition of late entries.

502.1.2.1 *Duties for Ski Jumping*

From which maximum inrun-length the jumpers must start.
The length of the inrun must be determined in such a way, that the jumping hill is used to its full capacity.
For the competition, the Jury is required to meet, once a jump has reached 95 % of the established Hill Size (HS) to consider whether the round of jumps is to continue. The Jury must decide whether the round in progress can be continued with the same inrun speed, or whether it must be cancelled and repeated from a lower starting gate. If the jumps are too short, the round canbe stopped, cancelled, and re-started from a higher gate.
In the event that the so called Wind/Gate Compensation System is in place, the in-run length can also be changed within a competition round (see art. 525.1.2).
In which sphere of the wind condition (velocity) the jumper is allowed to start.
About the starting order for a competitor who is either when delayed arriving at the start due to „force majeure“, or concerning a re-jump for a competitor who has been obstructed (see art.522.4)
In cases in which the Jury cannot make an immediate decision the jump or re-jump may be provisionally granted. This decision must be announced to the public.
Substitution and late Entries see art. 522.4

502.1.2.2 *Duties for Cross-Country*

If the temperature is below –20 °C, measured at the coldest point of the course, the competition will be postponed or cancelled by the Jury.
With difficult weather conditions (e.g. strong wind, high air humidity, heavy snowfall, or high temperature) the Jury may, in consultation with the Team Captains of the participating teams and the Chief of medical and rescue service responsible for the competition, postpone or cancel the competition.
The checking and recognition of a reserve course, if the homologated course can not be used due to poor snow conditions.

502.1.3 Decisions of the Jury

All decisions by the Jury must be made by open vote and a resolutions-protocol must be drawn up on all decisions which were taken. Each member has one vote. All the decisions of the Jury require plain/simple majority.
The members must vote (agreement or rejection, abstention is not possible) with the following exceptions:

– member is prevented from voting due to „force majeure“.

In case of a tie, the respective chairman of the Jury has the decisive vote.

502.2 The Competition Management

502.2.1 At OWG, SWC, WC-NC and GP-NC competitions the Competition Management consists of:

– the Race Director FIS (RD)
– the Technical Delegate (TD)
– the Chief of Competition
– the Chief of Course
– the Assistant of the TD
– the Assistant of the RD
– the Equipment Controller

502.2.2 At COC-NC competitions the Competition Management consists of the following members:

– the COC-NC Coordinator
– the Technical Delegate (TD)
– the Chief of Competition
– the Chief of Course
– the Assistant of the TD

502.2.3 For University Winter Games (UWG) the jury consists of the following members:

– The TD, who is the chair of the Jury (appointed by FIS)
– The Assistant TD (appointed by FIS)
– The FISU Race Director (appointed by FISU)
– The Chief of competition
– The Chief of course (only Jury member for the Cross Country race)

503 FIS Officials for Jury and Competition Management

Normally jury members should arrive at the venue early enough to have 2 full working days before first competition day.

The TD is responsible that all Jury duties are carried out and should distribute tasks among Jury members according to their abilities and experience.

Jury members should be able to ski the course and make a judgment of the course preparations.

503.1 The FIS Technical Delegate (TD)

503.1.1 TDs are appointed for all Nordic Combined competitions on the FIS Calendar (nomination art. 505). The TD is responsible for ensuring that the competition is carried out in accordance with ICR Rules and with the appropriate Cup Competition Regulations.

At OWG, WSC, JWSC, WC-NC, GP-NC and COC-NC events the TD cannot in general be a member of the host Nation's Ski Association; however, the FIS Council may make exceptions to this rule.
The TD is obliged to uphold the decisions of the Nordic Combined Committee and must possess a valid license at the time of appointment.

503.1.2 Requirements and Qualifications

A TD candidate must have an extensive background in support roles for officials and must also be able to communicate clearly in the official FIS language of English. The TD candidate's National Ski Association submits the candidate's qualifications to the Sub-Committee for Officials, Rules and Control for review. The qualification for a new candidate is to take part on two consecutive FIS-seminars. When starting this qualification period, the candidate should be under 43 years of age. The Nordic Combined Committee will grant exceptions to this rule in well-substantiated cases in which the National Ski Association files a petition for admission on behalf of the candidate.
The guidelines for TD qualifications as ratified by the FIS Council are valid for certification as a TD. Candidates for TD are not entitled to reimbursement for their expenses during the qualification period.

503.1.3 Examination and License

After completing all requirements for qualification and participation at the first FIS-seminar, the candidate is granted admission to the examination.
After passing the examination, the candidate will receive a license; this license consists of a passbook.
After successful passing the second seminar and examination the passport will be declare valid and the new TD gets a TD badge. Between the first and the second examinations the candidate must have practical experience at the national level.

503.1.4 Further Qualification and Revocation

To retain a FIS license, a TD must participate every two years in a certification course organised by the FIS.
A TDs license will be revoked if the TD fails to work as an assigned TD for two consecutive years without justified cause. Re-appointment and certification are possible only after the FIS receives a letter of support from the National Ski Association's chairman of officials and the head course instructor verifies the TDs successful participation in a FIS TD certification course. The re-appointment has to be confirmed by the Sub-Committee for Officials, Rules and Control.
Once a TD reaches the age of 65, they are automatically removed as a FIS-TD.

503.1.5 The Duties of the Technical Delegate:

503.1.5.1 Before the Competition

The TD must contact the Organising Committee in advance of the event and know the stage of preparation the organiser has reached. The TD should arrive at the venue early enough to inspect the preparation of the hill and cross-country course and assess the organisational readiness (art. 503).

The TD must inspect the homologation documents (jumping/cross-country). It is the responsibility of the organiser to provide the TD with a copy of the hill and cross-country certificates without being asked.
The inspection points to be covered by the TD include the following:

- the organisation of the event, lodging conditions, meals, transportation, preparation and working conditions for the media, for the preparation of team captains meeting must be inspected.
- the jumping hill(s). The preparation of the hill, the conformity of the hill's actual profile to the certificates, jumpers' safety, and measuring devices must be reviewed.
- technical and organisational planning for the jumping competition. The TD must assess working conditions for Judges, distance measurers, and calculation personnel; he must also evaluate the communication network (telephone and radio), the coaches' stand, the scoreboard display, start lights, start control, first aid services, and spectator control.
- to control of all technical devices
- to control the cross-country course, stadium, check profile, stadium layout, start and finish zone and fencing for all these zones.
- technical check of organisational planning for the cross-country competition (timekeeping, video-control, photo finish)
- the competition program. Inspection must cover training times, team captains meetings, draw, the competition schedule, medical service doping control, equipment control, and the awards ceremony.
- Jury: Working conditions, identification, communication
- checking the liability insurance (art. 212.2)

The TD has the authority to ask the Organising Committee for any support deemed necessary to the fulfilling of these tasks. The TD should be able to ski the course, and make a judgement of the course preparations.

503.1.5.2 During the Competition

503.1.5.2.1 Ski Jumping

It is the responsibility of the TD to ensure that the competition is carried out in accordance with ICR Rules.

- Check substitutions and late entries, art. 522.4
- Decide on all reported infractions including ICR 207 and late starts (if force majeure was the reason for late start), art. 525.1.13
- Inform teams on Jury decisions
- Decide on valid protests
- Document Jury decisions along with used evidence to be used in case of appeal

The TD must be present throughout the entire competition and must be located in the Judges tower. It is essential that the TD has a direct communication line with the Jury-members, thereby making it possible for quick and accurate decisions by the Jury.
Immediately after the competition the results and the start list for the cross-country race must be checked (Gundersen method).

503.1.5.2.2 *Cross-Country*

On the competition day the TD must be informed about the preparations at the cross-country area within the appropriate time. He has to check if competitions start as scheduled (stadium and course preparation, weather conditions, teams on site?). He must control all points at the start and finish area; he must supervise the start process and be in connection with all Jury-members. At the Mass start competition he must check immediately after the race the results and the start list for the jumping competition.

503.1.5.3 *After the competition*

Immediately after the competition, the TD is responsible for the final Jury-meeting, where the conclusion of the competition or decisions of the protests are prepared in writing. The TD must prepare his TD report within 3 days after the competition. This report shall include a complete set of minutes from all meetings and Jury decisions. The report is available online.

503.2 FIS Race Director (RD)

This official is nominated by the FIS for competitions of the highest category (see art. 502.2.1). The FIS Race Director must possess a TD-license for Nordic Combined.

503.2.1 The Duties of the Race Director include:

- Represents the interests of the International Ski Federation.
- Schedules and conducts inspections.
- Supervises that all aspects of the organizer agreement are correctly fulfilled.
- Monitors the proper operation of the event according to the regulations and guidelines of FIS and reports to the Head of Nordic Combined resp. to the Technical Committees.
- Responsibilities for the coordination of all persons and parties involved.
- Coordinates decisions concerning postponements and replacement of an event after cancellations.

The RD has the authority to ask the organizing committee for support deemed necessary to the fulfilling these tasks.

503.3 TD-Assistant

503.3.1 *The TD-Assistant must possess a TD-license for Nordic Combined.*
Additionally, he is responsible for the following special tasks in Ski Jumping:

- Responsible for the correct and due preparation of the competition facility (athletes area, chairlift, warm up area, starting area, in-run, take off, landing area as well as out run area)
- Inspection of the relevant security installations (sideboards, fences)
- Connection to trainers
- Completion of the TD report with any additional comments deemed relevant

503.3.2 *in Cross-Country:*

- Check the measurements of the course, control the structure and function of elements from the course profile according to the TD report and the installation of the start and finish area
- Control the start lists and the start procedures
- Control of fixed parts of course during the competition
- Evaluation of the control cards from the controllers
- Control of competition equipment and commercial marking
- As well as further, all assignments from the Jury

503.4 RD-Assistant

This official is nominated by the FIS for competitions of the highest category (see art. 502.2.1). He must possess a TD-license for Nordic Combined and will be appointed by the RD for specific tasks. Therefore it's necessary that he arrives at the event site at least one day in advance of the scheduled official jumping training (coordinated with the TD).

Additionally, he is responsible for the following special tasks:

- Placement of the technical systems for the in-run speed measuring and the measuring of the wind velocity.
- Control and monitoring of the technical systems for Ski Jumping and Cross-Country.
- Coordinates and directs the starting procedure for Ski Jumping and Cross-Country.
- Controls the preparation and main parameters of the Cross-Country courses.
- Inspect the preparation of the hill and cross-country course and assess the organisational readiness.

503.5 COC-NC Coordinator

This official is nominated by the FIS for COC-NC competitions (see art. 502.2.2). The COC-NC Coordinator must posses a TD-license for Nordic Combined.

503.5.1 *The Duties of the COC-NC Coordinator include:*

- Represents the interest of the International Ski Federation.
- Supervises that all aspects of the organizer agreement are correctly fulfilled.
- Monitors the proper operation of the event according to the regulations and guidelines of FIS and reports to the Head of Nordic Combined resp. to the Technical Committees.
- Responsibilities for the coordination of all persons and parties involved.
- Coordinate decisions concerning postponements and replacement of an event after cancellations.

The COC-NC Coordinator has the authority to ask the organizing committee for support deemed necessary to the fulfilling of these tasks.

503.6 **Equipment Controller**

These officials are nominated by FIS for Cup competitions (WC, COC, SGP) (see art. 502.2.1). The Equipment Controller must posses a TD-license for Nordic Combined.

503.6.1 *The Duties of the Equipment Controller are:*

Ski Jumping

- Responsibilities for the correct preparation and maintenance of the necessary equipment control devices.
- Controls the equipment, records of any infringements and makes reports to the Jury.

Cross-County

- Coordination and control of the start procedure.
- Further defined tasks by the Jury.

504 Judges and Referees

504.1 Ski Jumping

504.1.1 *Jumping Judges*

The duties, education and nomination of the jumping judges are described in the ICR Book III, art. 404 and 405. The appointment for competitions in Nordic Combined will be coordinated by the Nordic Combined and Ski Jumping Sub-Committees for Officials, Rules and Control.

504.1.2 *Distance Measuring Officials*

For all Ski Jumping competitions listed in the FIS Calendar of events, the distances jumped shall be reported by distance measurers (art. 506.1.2.1).
Each National Ski Association participating in the event may enter one distance measurer as long as the person nominated possesses the required qualifications and performs these duties during all official training periods. Foreign distance measurers are not entitled to reimbursement by the organisers of expenses arising from their assignment.

504.1.2.1 *The Distance Measurers*

take their place on one side of the landing hill on the prepared standing positions behind the distance boards according to the measuring area assigned to them by the chief distance measurer. If foreign distance measurers are appointed, they must be assigned to measuring areas between the landing segment P-point down to K-point and must be determined by a draw, which is supervised by the chief distance measurer.

The measuring area of a distance measurer must not exceed the following ranges:

- up to 60% of the Hill Size (HS) 5 meters
- from 60% to 80% of theHS 4 meters and
- from 80% to 100% of the HS 3 meters.

All the distance measurers have the clear responsibility to view the measuring area which they were assigned to, and to note the landing distance within this measuring area immediately and to provide the marked

distance clearly to the distance recorder (according to art. 514.1.3) regardless of the actions of the people beside them.
At OWG, WSC, JWSC, WC-NC, GP-NC and COC-NC events video distance measuring will be used, so that the distance measurers who are positioned in the landing segment of the video distance measuring will only be used if there is a technical failure of the video measuring. For this reason the measuring distance, which these distance measurers are assigned to, can be up to 10 m long, and the distance measurers have to stand higher off to the side. In addition, there must be cross-lines marked every 5 m on the landing hill.
At OWG, WSC, WC-NC, SGP-NC the measuring can be done without distance measurers as long as the recording of all jumps is secured.

504.1.2.2 *Distance Recorder*
The distance recorder shall be located in a suitable location on the landing hill opposite the distance measurers but offers the distance recorder an advantageous position from which to receive reported distances. The distance recorder is responsible for the accurate recording and reporting of jumping distances indicated by the distance measurers. At the conclusion of the competition, the distance recorder must deliver the original Distance Record Chart to the competition secretary for processing and final review by calculations personnel.

504.2 Cross-Country

504.2.1 *Start official Cross-Country*
The starter must ensure that all provided preconditions are fulfilled so that all competitors can start at their correct times.

504.2.2 *Finish Referee*
The finish referee is responsible for keeping a list and a voice recorder (dictaphone) of the order in which the competitors cross the finish line. He gives this list and the tape to the chief of timekeeping.

504.2.3 *Finish Controller*
After the finish, the finish controller checks the competitor to ensure that he has crossed the finish line.

505 Nomination, Reimbursement and Insurance of Competition Officials

505.1 Nominations

The FIS shall nominate certain officials for international Nordic Combined competitions. Jumping Judges may not be assigned to events in which a family member is participating (grandparents, parents, children, brother, sister, husband, wife).

505.1.1 *Olympic Winter Games (OWG), FIS World Ski Championships (WSC), FIS Junior World Ski Championships (JWSC)*
For OWG, WSC:
– the TD

– the RD
– the TD-Assistant
– the RD-Assistant
– the Equipment Control
– the Chief Distance Measurer*
– six Jumping Judges*

Five at a time, the nominated Jumping Judges will officiate at the respective Ski Jumping competitions at OWG and WSC, taking turns based on a draw decision.

The 6th Jumping Judge of the respective competition or competition day will act as start or fall referee (Jury decision).

505.1.2 *FIS Junior World Ski Championships (JWSC)*

– the TD
– the TD-Assistant
– the Equipment Control
– the Chief Distance Measurer*
– five Jumping Judges*

The nomination of all named competition officials is carried out by the FIS Council.

The Jumping Judges nominated must belong to different Ski Associations. One of the Jumping Judges should be a member of the Ski Association of the organising country.

505.1.3 *World Cup- and Grand Prix Nordic Combined competitions (WC-NC, GP-NC)*

– the TD
– the RD
– the TD-Assistant
– the RD-Assistant
– the Equipment Control
– the four foreign Jumping Judges and
– one Jumping Judges from the host country

The Nordic Combined Sub-Committee for Officials, Rules and Control nominates the TD and the TD-Assistant for the event by name and determines which four National Ski Associations may nominate one of their own qualified Jumping Judges to officiate at the event.

The National Ski Association of the host country shall nominate the remaining Jumping Judge from their own list of qualified Jumping Judges.

The nomination of the Jumping Judges is carried out in coordination with the Ski Jumping Sub-Committee for Officials, Rules and Control.

* see nominations ICR Book III Ski Jumping

505.1. 4 Continental Cup competitions (COC-NC)

– the TD
– the TD-Assistant
– the one foreign Jumping Judge
– four Jumping Judges from the host country

The Nordic Combined Sub-Committee for Officials, Rules and Control nominates the TD and the TD-Assistant for the event by name and determines which National Ski Association may nominate one of their own qualified Jumping Judges to officiate at the event. The National Ski Association of the host country shall nominate the four remaining Jumping Judges.

The nomination of the Jumping Judges is carried out in coordination with the Ski Jumping Sub-Committee for Officials, Rules and Control.

505.1.5 International Nordic Combined Competitions (FIS)

– the TD

The Nordic Combined Sub-Committee for Officials, Rules and Control nominates the TD. The National Ski Association of the host country shall nomnate the TD Assistant and the five Jumping Judges.
The TD and the TD-Assistant and the five Judges must possess valid FIS license at the time of appointment.

505.2 Nomination of Substitutes

Whenever a competition official nominated by the FIS is unable to attend the competition and fulfill an assignment („force majeure“), the official must be replaced. For OWG, WSC, JWSC, WC-NC, GP-NC and COC-NC events, the substitute nomination is carried out by the FIS Office.

505.3 Reimbursement of Expenses

The competition Organising Committee is responsible for the cost of travel and accommodation to the following amounts:

505.3.1 Travel Expenses

– first class train fare,
– air fare for longer distances (economy class)
– or CHF 0.70 per km for travel by car
– and/or CHF 0.70 per km for travel by car (car expenses from and to the airport)
– parking costs

Prior to travel, the nominated competition official must confer with the organiser regarding the travel arrangements (train, plane or car).

If overnight accommodation during the journey to and from the assignment is necessary, this must be justified and reimbursed separately.

505.3.2 Daily Allowance

CHF 100.– per day of travel to and from the event. The RD Assistant, TD and the TD Assistant receive in addition CHF 100.– per day for the duration of the event during OWG, WSC, WC-NC, GP-NC, COC-NC and JWSC competitions.

505.3.3 *Accommodation*

Free room and board in an adequate hotel at the event.
The stay at the event shall be coordinated with the Organising Committee, including both the days of official training and the days of the competition.

505.3.4 *Costs for visa*

The costs for obtaining visas have to be paid by the organizer. The reimbursement of costs includes travel costs to the embassy respectively consulate according the ICR art. 505.3.1, travel expenses and the visa costs on receipt.

505.4 The reimbursement of expenses mentioned above will apply to the competitions and officials listed below:

505.4.1 *OWG and WSC*

– the TD
– the TD-Assistant
– the RD-Assistant
– the chief distance measurer
– six Jumping Judges

505.4.2 *JWSC*

– the TD and
– the TD-Assistant

At JWSC, the reimbursement according to the regulations for JWSC shall apply to the following:
– the chief distance measurer
– the five Jumping Judges

505.4.3 *WC-NC- and GP-NC competitions*

– the TD
– the TD-Assistant
– the RD-Assistant
– the four foreign Jumping Judges

505.4.4 *COC-NC competitions*

– the TD
– the TD-Assistant and
– one foreign Jumping Judge

505.4.5 *International Nordic Combined Competitions (FIS)*

– the TD

505.4.6 *National nominations for FIS Officials for International Nordic Combined Competitions*

The Organiser is responsible for providing at least traveling expenses, full board and accommodation during the event according to the national rules.

506 Team Captains' Meeting

506.1 Procedure

For each competition a team captain meeting is carried out. It should take place one day before the official training and before the competition.
The date, time and place of the team captains' meeting has to be published in the competition program (article 216). In principal two representatives per participating team are allowed to take part in the team captains' meeting.
At OWG, WSC, WC-NC and JWSC competitions the seating arrangements of the participating teams have to be marked.
At OWG, WSC, WC-NC and JWSC competitions the team captains' meeting shall be held in English. Supplementary translations should be provided.

506.2 Agenda

A written agenda has to be distributed for the team captains' meeting. It is prepared by the competition secretary in cooperation with the chief of competition and the TD.
At all international competitions the agenda normally contains the following items:

- Roll call
- Introduction of the members of the OC
- Introduction of the Jury
- Introduction and draw of the Jumping Judges
- Weather forecast
- Checking of the entries or grouping of the competitors and if necessary draw
- Information to the competition areas (jumping hill, stadium, course, start, finish, exchange zone for relay, security problems, fencings etc.)
- Preparation of Jumping hill and Cross-Country course
- Training and competition program
- Equipment controls
- Medical controls
- General information from TD
- General information from the Organiser
- General information from FIS RD

Minutes which contain all topics of discussion and the recommendations made must be taken at the team captains' meeting.

510 The Jumping Hill

511 Informatin on the Jumping Hills

511.1 The competitions for Nordic Combined will be carried out on normal hills and/or on large hills

511.2 Classification of the Jumping Hills according to sizes

The class of the hill will be determined by the distance of the L-point (HS):
Hills are classified by sizes as follows:

Description	Width HS	Respective Width w
Small hills	to 49 m	to 44 m
Medium hills	50 m to 84 m	45 m to 74 m
Normal hills	85 m to 109 m	75 m to 99 m
Large hills	110 m and larger	100 m and larger
Flying hills	185 m and larger	170 m and larger

Large hills for which the height difference between the lowest point in the outrun and the edge of the takeoff exceeds 88 m will not be homologated by the FIS.
Whenever new twin-hill construction is to take place, the difference between the distances at HS on the normal and large hill should be a minimum of 25 meters.

511.3 The Geometrical Elements for the Jumping Hill (Fig. 1)

Inrun

A highest start place
B lowest start place
E_1 the beginning of the radius curve
E_2 the end of the curve, the beginning of the takeoff
T the edge of the takeoff
e_1 the length of the inrun from the highest start place to the edge of the takeoff table
e_2 the length of the inrun from the lowest start place to the edge of the takeoff table
e_s the length of the starting place area
t the length of the takeoff
γ the gradient of the straight section of the inrun
α the gradient of the takeoff
r_1 the radius of the curve of the inrun at point E_2

Profile of Landing Area

T the edge of the takeoff of the hill (=coordinate origin)
s the height of the takeoff
P the beginning of the landing area
K construction point
L the end of the landing area
U the start of the outrun area, lowest point of the profile
HS the measured distance (Hill Size) from the edge to the takeoff to the end of the landing area L
w distance between the edge of the takeoff and the construction point K, measured according to ICR art. 415.1
h the height difference from the edge of the takeoff to the K point
n the horizontal distance from the edge of the takeoff to the K point
z_U the height difference from the edge of the takeoff to the lowest point U
l_1 the length of the curve P-K
l_2 the length of the curve K-L
l the length of the curve of the landing area P-L
a the length of the outrun
β_o the tangent angle of the landing hill knoll at the base of the takeoff
β_P the tangent angle at P point
β the tangent angle at K point
β_L the tangent angle at L
r_L the landing hill radius P-L
r_{2L} the radius curve at L
r_2 the radius curve at U
b_1 the clear width of the inrun
b_2 width at the base of the takeoff
b_k the prepared width at the K point
b_u the prepared width at the end of the r_2 radius and the start of the outrun

Fig. 1

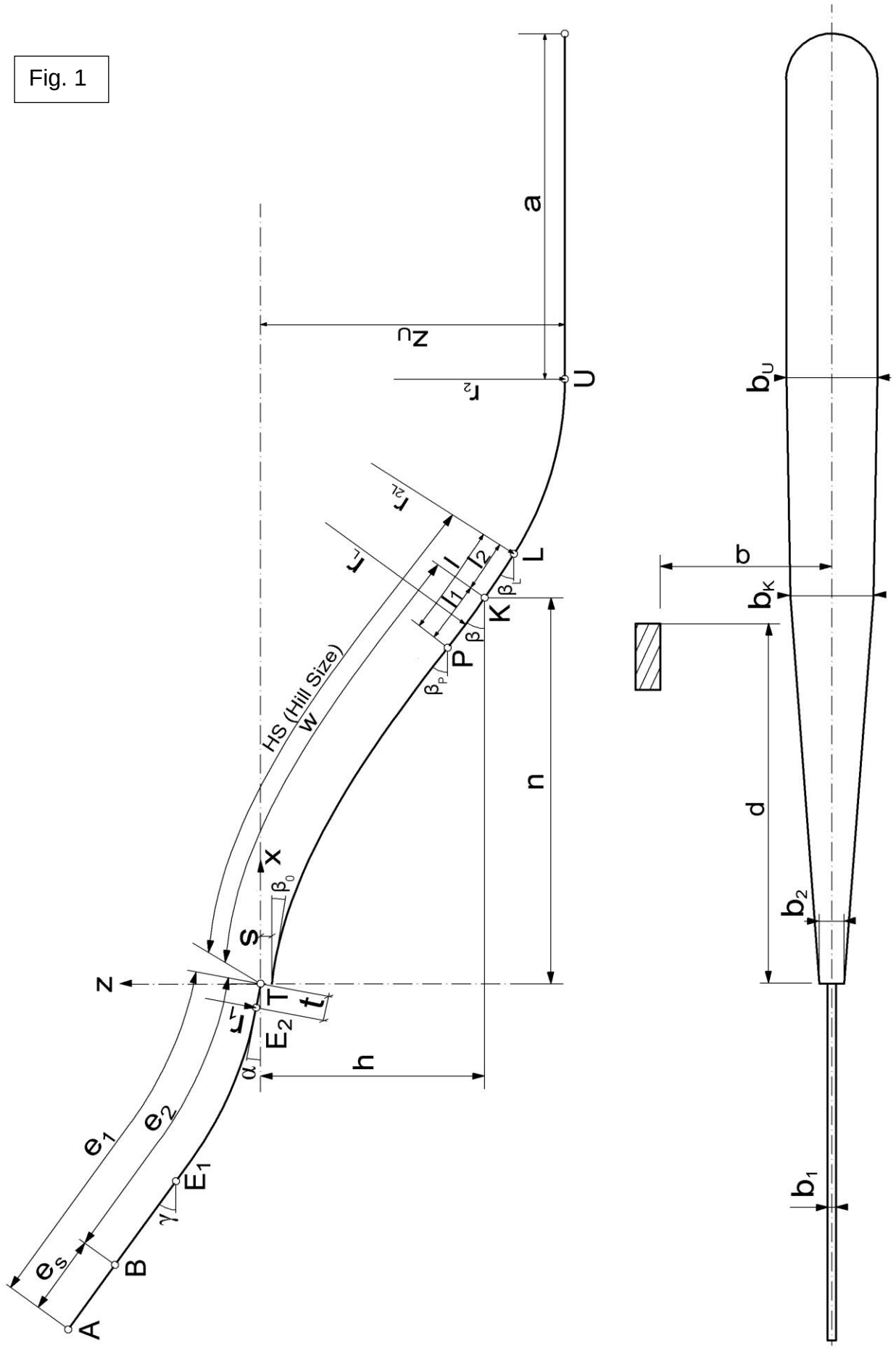
HS (Hill Size)
W
a
z_U
r_2
U
r_2
r_L
L
l_2
l
l_1
K
β_L
β
P
β_P
n
X
β_0
S
z
T
t
r_1
E_2
α
h
e_1
e_2
E_1
γ
e_S
B
A
b_U
b
b_K
d
b_2
b_1

512 Information to the Cross-Country courses

512.1 Classification of the courses

Competition format	Competition distance (km)	Course length (km)
Individual Gundersen	10	2.0, 2.5
Mass start	10	2.0, 2.5
Team	4 x 5	2.5
Team Sprint	2 x 7.5	1.5

512.2 General information

At World Cup competitions, Cross-country courses exceeding the highest point (1800 m) must be approved by the FIS Council.

512.3 Norms for the Cross-Country course

Cross-Country courses must be laid out so that they provide a technical, tactical and physical test of the competitors' qualifications. The degree of difficulty should be in accordance with the level of the competition. The course should be laid out as naturally as possible to avoid any monotony, with rolling undulating sections, climbs, and downhill sections.
Rhythm should not be broken by too many sharp changes in direction or steep climbs. The downhill sections must be laid out so they challenge the competitors. At the same time it should be possible to ski the course even under fast snow conditions.

512.4 Competition course

In principle, the Cross-Country course should consist of:

- One-third up hills defined as climbs with a gradient between 9% (1:11) and 18% (1:5.5) with height differences over 10 meters plus some short climbs steeper than 18%

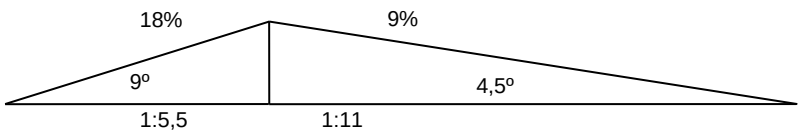

- One-third undulating, rolling terrain, utilizing all terrain features with short climbs and downhills (with height differences of 1-9 meters).
- One-third varied downhills, demanding versatile downhill techniques.

The courses may only be used in the direction established for the competition.

512.5 Technical parameters of the Cross-Country courses

512.5.1 Height Difference (HD)

The difference in height (HD) between the lowest and highest points of a

1500 m	25 m (for a Team Sprint course)
2000 m	40 m
2500 m	50 m
3750 m	60 m

512.5.2 *Maximum Climb (MC)*

The maximum length difference of a single climb (PHD) must not exceed these limits but can be interrupted by a section of undulating terrain that does not exceed 200 m in length or a down hill that does not exceed 10 m. PHD.

1500 m	25 m (for a Team Sprint course)
2000 m	40 m
2500 m	45 m
3750 m	50 m

512.5.3 *Total Climb (TC)*

The total climb (TC) should be within:

5 km	150 – 210 m
7.5 km	220 – 255 m (for a Team Sprint course)
10 km	250 – 400 m
15 km	400 – 550 m

512.5.4 *Description of Uphills*

The uphill is defined by the Partial Height Difference (PHD). PHD is the height difference from the lowest to the highest point of the uphill. Additional description of the uphill is given by the Partial Climb (PC). PC is the total climb of the uphill. Sum of all PCs is the Total Climb (TC) of the course.

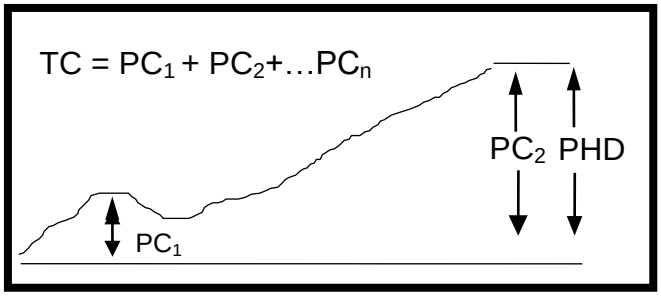

512.6 **Course Design**

Ideally the course should consist of several laps, so that spectators are entertained by repeated appearances of the competitors in the stadium.

512.7 **Homologation**

The homologation of Nordic Combined Cross-Country tracks will be carried out by the Nordic Combined Sub-Committee for Officials, Rules and Control based on the Cross-Country ICR Book II art. 311 and 312 and the Cross-Country Homologation Manual.

513 Working conditions at the Competition areas

513.1 At the Jumping Hill

513.1.1 *Judges Tower*

The following requirements in and around the judges tower must be fulfilled:

- Ensure that enough space for Jury and additional staff (TV, Data-Service, technical equipment wind measuring system, Info PC, start control)
- Contact to the environment (it must be possible to open the window)
- The view to the start, to the take off and landing area including the out-run

– Communication to all important points and officials on the jumping hill
– Judges compartments
– Room for the announcer

513.1.2 *Coaches Stand*

For jumping hill facilities, where international competitions are to be organized, coaches must have two suitable stands (for 20 persons each) One stand should be in the area near the edge of the take off and the second should have an unobstructed view of the jumpers flight and landing.
For OWG and WCS events, coaches' stands for 40 coaches must be available.

513.1.3 *Mechanical Lift*

For OWG, WSC and WC-NC events, a mechanical lift for the jumpers is required.

513.1.4 *Warming Area*

For OWG, WSC, JWSC and WC-NC competitions, a warming area large enough to accommodate 20 jumpers is required near the inrun.

513.2 Cross-Country Stadium

513.2.1 A Cross-Country stadium has to be prepared for OWG, WSC, JWSC and WC-NC competitions, with a well-designed start/finish area.

513.2.2 The stadium arrangement should provide a functional entity divided and controlled as necessary by gates, fences and marked zones. It must be prepared in such a way that:
– the competitors may pass through it several times
– competitors, officials, media, service people and spectators may reach their respective areas easily
– there is enough space to carry out Individual starts, Team starts, and mass starts and the finish can be as wide and long as required.

513.2.3 Competitors should be able to reach the following areas, without being disturbed:
– the team preparation area (wax cabins)
– the ski testing area and the warm-up tracks
– the equipment control and transponder distribution
– the storage for warm-up clothing
– the start
– the through lap or relay/Team Sprint exchange (with exit)
– the finish
– the immediate care area (tents for the exchange of clothes, refreshments etc.)
– the exit

513.2.4 Competition officials and Jury members must have proper working conditions. Coaches, officials, media and service people must have proper working zones within the stadium area so that they can work without disturbing the process of start and finish. The access of these persons to the stadium area must be regulated by accreditations.

513.2.5 *Jury Room*

At OWG, WSC, JWSC and WC-NC competitions, FIS officials and Jury members must be provided a working room in the immediate vicinity of the stadium.

513.2.6 *Timekeeping Building*

Timekeeping and calculation should be located in a building with a good view of the start and finish.

513.2.7 *Ski Test Area*

A ski glide testing area with tracks for all participating teams must be located near to the stadium. It should also be in close proximity to the team wax cabins and warm up track.

513.3 Requirements for Competition areas

513.3.1 *Team areas and wax cabins*

For OWG, WSC, JWSC, WC-NC and COC-NC a secured team preparation area with wax cabins equipped with electrical current supply must be installed in the immediate vicinity of the Jumping hill and the stadium.

513.3.2 *Medical Services Room*

See specifications of the Medical Committee in the Medical Guide.

514 Measuring Devices

514.1 Ski Jumping

514.1.1 *Jumping Distances*

Distance markings shall be placed on both sides of the landing from the distance of 0.5 K to the HS. To correctly position the distance markings, take a measuring tape, and measure from the two sides of the takeoff edge down the landing slope to the point that is 50% of the K-point (w rounded up to a full m). At this measured point, fasten the appropriate distance marking on both left and right sides of the landing slope. Measure along the slope in 1 m intervals to mark the location of the other distance markings.

For the measuring of the distances with a technical system (technical distance measuring), the approval of the Jumping Committee is required for its operational validity.

514.1.2 *Definition of Jumping Distance*

The distance to be awarded is measured from the edge of the takeoff to the jumpers landing place on the landing slope. The landing is considered complete when both feet are in full contact with the landing slope. For abnormal landings (e.g. only one foot is in full contact with the slope and the other foot is raised in the air) the distance measured will be the point where the first foot is in full contact with the landing slope.

The landing point is determined by the exact place where the jumper's feet touch the landing slope. For the jumper landing in the telemark position, the distance to be measured is the midpoint between the feet.

If the landing does not proceed by placing the skis on the snow (a fall), the distance measured will be the point where any part of the jumper's body first touches the landing slope.

514.1.3 *Measuring of the Jumping Distance by the Distance Measurers*

The distance measurers stand on one side of the landing slope and follow the jumper's trajectory with their eyes up to the landing point. The measurer in whose measuring area the viewed jump landed shall mark the jumping distance to an accuracy of 0.5 m. The mark to be awarded is indicated by the placement of the measurer's hand on the distance markings. Half meters are indicated by an additional rising of the free arm. The distance markings shall be placed on both sides of the landing slope to prevent parallax mistakes by the markers.

514.1.4 *Measuring of the Jumping Distance by the Technical Measure*s

Technical measuring devices that measure distances to an accuracy of 0.5 meter and tabulate the distance are permitted for the recording of the jumping distance and the calculation of distance points.

Distances must also be practically measured by distance measurers as a back-up and in case of mechanical failure of the technical measuring device.

514.1.5 *Inrun Speed*

The devices for the measurement of inrun velocity (v_O) shall be placed as follows:

- the measured distance is 8 m
- the second photocell beam must be located 10 m before the edge of the takeoff
- the photocell beam must be 0.2 m above the snow profile

For jumping hills listed on the FIS competition calendar Hill Size (HS) 85 m and larger, inrun velocities must be measured during all training periods and throughout competition.

514.1.6 *Wind Velocity and Direction*

The wind measuring instruments must be placed alongside the landing slope at the height of the optimal flight trajectory. The measurement data for these devices must be available to competition officials in the Judges Tower and shown in the most consolidated, readable form possible. Measuring instruments must be placed in three locations on normal and large hills (at the edge of the takeoff as well as at approximately 50% and approximately 100% of the distance to the K-Point). In addition, at least 8 wind flags or wind socks must be placed along each side of the landing hill at the height of the flight trajectory.

If the wind/gate application is used there are special rules relating to the fixation of wind messuring devices.

514.1.7 Start Permission and Start Time Control

514.1.7.1 *Three phase mode*

Start permission and starting time control at OWG, WSC, JWSC, WC-NC, GP-NC as well as COC-NC will be determined by means of a three-coloured (red-yellow-green) stoplight and a digital clock which are connected and running automatically depending on the adjustable starting rhythm program.

During the red phase (start preparation) the clock runs backward from the adjusted time to zero seconds. The red phase is for the direction of the competition and can be stopped whenever needed. During the consecutive yellow phase the clock runs forward. The competitor is allowed to take the position on the starting bar with the begin of the yellow phase. According to the external conditions the Jury decide about the minimal duration of the yellow phase (usually between 10 and 15 seconds). The duration of the yellow phase can be between 10 and 45 seconds. If the conditions do not allow to start the competitor, the yellow phase switches to red automatically. In this case the competitor must leave the starting bar and prepare for the new starting procedure. The yellow phase switches to the green phase after 10 seconds at the earliest.
With the switching to green light the starting time begins and will be finished after 10 seconds. Within these 10 seconds the competitor must start and leave the starting bar. The light automatically switches back to red and the starting procedure for the next jumper begins.
The times for yellow and red phase must be clearly visible to the athletes on the separate display on the starting semaphore.

514.1.7.2 *Two phase mode*

The start permission and the start time control FIS events must be done with an automatically controlled light signal (traffic light). The light shall be a steady green for 5 seconds, a flashing green for a minimum of 5 seconds up to a maximum of 10 seconds.
After the entire start time period of a minimum of 10 seconds up to a maximum of 15 seconds, a red light thereafter. The established start time period must be clearly visible to the athletes. The countdown of starting time may also be shown by an automatically directed clock.
The chief of competition or an assigned assistant is responsible for controlling the start-time device.

514.1.8 *Lengths, Angles, and Temperatures*

The following measuring devices and instruments must be available on site for the TD and the TD Assistant at all times:

- a 50 m measuring tape
- a hydrostatic balance (digital level)
- a balance bar
- a goniom
- a thermometer
- a metric tape measure (minimum 3 m).

These measuring devices will allow the TD to review the actual and current snow profile, snow temperature, and air temperature.

514.2 Measuring Devices for Cross-Country

For all competitions listed in the FIS Calendar, electronic timekeeping is mandatory. Electronic timing will always be supported by hand timing as a backup system and the results cross checked between the two systems.

514.2.1 *Timekeeping – Start*

The Gundersen start is carried out without an electronic start gate. In order to guarantee an exact start, a large display digital clock must be used. The clock is started by zero time when the first competitor starts. At the same time, the starters must start an additional stop watch for control. The starting procedure must be recorded by a HD video camera which focused to the clearly marked starting line (see marking start line, art. 515.2.7).

As a backup system for OWG, WSC and WC an additional transponder line has to be placed 1,5 m beyond the starting line. The reference time for the Jury to check the start procedure is 1 second, which means all earlier starts must be checked.

514.2.2 *Intermediate Time*

An intermediate timing point will be established according to the local circumstances and the respective length of the course. In principle it should be 1 – 2 intermediate timing points per round.

514.2.3 *Finish Timing*

Times will be measured in full tenths of a second. Times to one hundredth of a second will not be used.

When using hand timing, the time is taken when the competitor's first foot crosses the finish line.

In case of electronic timing, the time is taken when the contact is broken. The measuring point of the light or photo barrier must be at a height of 25 cm above the snow surface.

Additionally, the finish is to be recorded by video cameras. The first camera must be positioned on one the side of the finish line providing a picture of the finish and an additional camera positioned to identify the starting bibs.

514.2.4 At OWG, WSC and WC-NC special Photo-Finish cameras (Line-CCD) must be employed to record the correct order of finish. To attain a correct and swift result evaluation, it is imperative that every competitor wears an additional starting bib on the outside of his thigh where the camera position is. The height of the starting bib digits should not be less than 8 cm.

The Line-CCD camera must be able to register finish line crossing with a 1/1000 s precision. The CCD camera must be synchronised with the main timing system 1/2 hour before competition starts. The display of the time behind the winner or display of the running time is sufficient.

In the case of Photo-Finish decisions, the image of the Line-CCD camera must be presented on the system monitor to the Jury, additionally a colour print-out with time scale is required.

This system is subject to FIS homologation.

514.2.5 *Photo-Finish*

The use of technical measurements (Video camera, Line-CCD camera) shall be used in the following situations for the determination of the actual final ranking:

- if the finishing times are identical
- a difference in the finish ranking list made by the finish referees
- the difference between two or more athletes crossing the finish cannot be clearly witnessed.

514.3 Transponder Timekeeping

Transponders (active and passive systems) can be used as a supporting system to the official timing system to determine race times and ranking sequences at intermediate timing points, pre-timing points, and finish (unofficial result).
The official result must be confirmed by using electronic timing systems in accordance with ICR 514.3.1.

For Gundersen competitions the order at the finish is the ranking criteria for the official result. The finish order must be confirmed in any case with the photo finish system. In case of usage of transponders the determined finish times can be used for the official result when the finish order is confirmed by photo finish system.

514.3.1 Electronic Timing

The following electronic timing technologies can be used to identify the official finish times:

- Electronic timing system based on photo cells. The measuring point of the light or photo barrier must be at a height of 25 cm above the snow surface.
- Photo finish system. The measuring point will be the toe of the first boot meeting the finish line.

514.4 Current Information Facilities

A notice board is showing the air and snow temperature. These temperatures must be displayed at the following times: Two hours before the start, one hour before the start, half an hour before the start, at the start, half an hour after the start, and one hour after the start.
Temperature measurements must be taken in the stadium area and at places where extreme temperatures (low points, high points, windy, shady or sunny places) can be expected.
Notice boards must be used for intermediate times and unofficial results.
Loudspeakers must be used for announcing the competition and other important information concerning the event.
In order to inform competitors, trainers, spectators, etc., at least one language (English or German) must be used in addition to the Organiser's language.

515 Preparation of the Competition areas

515.1 Ski Jumping Hill

515.1.1 General Snow Preparation

Before the start of official training and throughout the entire competition period, the hill – from the start point at the top of the inrun to the end of the outrun – must be prepared in exact accordance with the requirements.

515.1.2 Requirements for the Inrun and Takeoff

The preparation of the snow must be such that it is completely level and at the exact height of the profile boards. This profile should allow a snow depth of 20 cm minimally. The necessary snow density is achieved through packing.

The tracks must be prepared with the help of technical equipment (a track cutter, track plane or inserted profile boards or something similar) according to the following measurements:

- Distance between both centers of tracks for Jumping hills with w over 75 m: 30 - 33 cm
- Width of track: 13.0 - 13.5 cm
- Depth of track: at least 2 cm for normal hills and 3 cm for large and flying hills.

The following regulations are valid for OWG, WSC, JWSC, WC-NC events:

- In winter, the inrun tracks must be prepared with artificial snow, ice or in exceptional cases artificial material (i.e. china).
- The inrun tracks prepared with artificial snow or ice have to be supported by a cooling system.
- The track have to be made by track cutters
- It has to be assured that surface water caused by rain or warm weather can be drained from the track.

The preparation of the inrun and takeoff must provide all competitors with the same conditions throughout each competition round. If it is necessary to change or prepare the inrun during the competition because of snowfall, falls, or long holds, there must be a sufficient number of trial jumps before the competition can continue. In the case of poor and hazardous conditions, the Jury will base its decision on the performance of the trial jumpers and the effects of the weather on them.

If the length or inclination of the takeoff is changed during one official round of competition, the round must be cancelled and restarted.
It is the Jury's responsibility to decide at the conclusion of a day of jumping whether the inrun track shall be left in or taken out and the inrun prepared anew.

515.1.3 *Requirements for the Landing Slope and Outrun*

The snow must be prepared so that it possesses the necessary density and firmness. The snow depth must be a minimal of 30 cm (35 cm for the hills with plastic covering).
For sites hosting OWG, WSC, JWSC and WC-NC competitions, it is mandatory that the preparation, grooming and packing of snow will be accomplished through the use of an appropriate on-site snow grooming machine. Chemicals may be used to ensure that the necessary firmness can be achieved. The prepared snow surface shall be completely level and concur with the planned (designed) snow profile. This requirement is extremely important for the area from the first distance paddle to U (end of transition curve).

515.1.4 *The Marking of the Landing Hill*

The Hill Size (HS) has to be marked on the landing hill by a crossline of spruce twigs or equivalent. This crossline should be marked with red ink colour at each side of the landing slope for a distance of 5 meters. Furthermore, on both sides of the landing slope it is recommended that banners with different colours shall be laid down as follows:

– between the construction point (K) and the Hill Size (HS) a red banner on each side;
– from the K-point towards the P-point a blue banner on each side in an equivalent length of the distance between K and HS, as well as
– from the fall line towards the HS a green banner on each side in an equivalent length of the distance between K and HS.

For the orientation of the measurers, Jumping Judges and spectators regarding distances reached and for calibrating the video-distance measuring, crosslines also have to be placed on the landing slope from 10 m before P-point to the Hill Size (HS) for the jumping lengths at intervals of five m (e.g. 60 m, 65 m, 70 m, 75 m, 80 m...). If needed, the Jury is entitled to add additional markings.

515.1.5 *Fall Line*

It is the responsibility of the Jury to define the placement of the fall line on the outrun. After this decision has been reached, a crossline shall be marked with either a painted line or spruce twigs. As a rule, the fall line shall be located at the lowest point on the r_2.

515.2 Cross-Country Course

515.2.1 *Pre-Season Preparation*

Rocks, stones, roots, stumps, brush and similar obstacles should be removed. The courses must be prepared before the winter so that they can be raced even with very little snow. Sections of the course that have drainage problems must be corrected. The summer preparations should be of a standard which allows for carrying out of competitions with approximately 30 cm of snow. Special attention must be given to downhill sections and the need for banking the curves.

515.2.2 *General Snow Preparation*

The course should be completely prepared with mechanical equipment. If heavy machines are used, they should follow the original configuration of the ground as much as possible in order to preserve the undulations of the terrain.

515.2.3 *Preparation for Free Technique*

The course must be prepared to the recommended width from 6 to 8 m. The course must be prepared so that competitors can ski and pass unobstructed. On slopes where the trails traverse, they must be wide enough to allow for good preparation.

515.2.4 *Preparation for Mass start*

The first 30–50 m after the start will be prepared with parallel tracks where each competitor is forbidden to leave the track and is forbidden to use skating techniques. The next 50–100 m (without tracks) should be like a funnel until the normal width of 6–8 m is reached. Narrow sections along the course must be eliminated.

515.2.5 *Preparation for Training*

The courses must be completely prepared before the official training, correctly marked and with the kilometer signs in place. The testing tracks should have the same preparation as the competition course.

515.2.6 *Employment of Chemical*

All use of artificial means in order to improve the glide on the snow are forbidden. In special situations, the use of chemicals to preserve a solid surface is permitted.

515.2.7 *Start Area*

The start must be prepared according to the terrain, with the first 100–200 m prepared to a width at 6–9 m.

In order to guarantee an exact start, there must be a large start clock placed so that it is easily readable from the start line and a board with the starting numbers and starting times for each starting lane must be used. The clock is started by zero time when the first competitor starts. At the same time, the starters have to start an additional stop watch for control.

The start line must be clearly marked by a coloured line. The use of coloured planks with a width of max. 10 cm placed lower than the prepared snow is recommended. This start line must be placed at right angles to the skiing direction.

515.2.8 *Individual Gundersen Competition*

The start must be prepared so that in principle three (3) competitors may start side by side.

515.2.9 *Mass start*

The start layout for a Mass start competition is prepared in a straight line. The distance between each track in the starting area should be 1.2 – 1,5 m. If there are more competitors in any one group than there are start lanes, then the higher start number will be positioned in the next row. The distance between the rows should be 4 m minimally. To ensure a fair starting procedure, additional modifications due to the terrain and snow conditions can be made. Start number 1 starts on the middle track, no. 2 to his right, no. 3 to the left of the middle track etc.

515.2.10 *Team Gundersen Competition*

The start must be prepared so that in principle two (2) competitors may start side by side.

515.2.11 *Relay Exchange Zone*

The relay exchange zone should be a rectangle 30 meters long and sufficiently wide, clearly marked marked (the beginning and end of the zone must be marked with 1 m long red line on the right and left side and with signs “Exchange Zone Start” and “Exchange Zone End”) and roped off and located on flat or smoothly rising terrain near to the start and finish (special regulation art. 542.3.

515.2.12 *Team Sprint Exchange Zone*

The Team Sprint exchange zone should be a rectangle 30 to 40 meters long or of equal lengths the boxes and sufficiently wide, clearly marked (the

beginning and end of the zone must be marked with 1 m long red line on the right and left side and with signs “Exchange Zone Start” and “Exchange Zone End”) and roped off and located on flat or smoothly rising terrain near to the start and finish (special regulation art. 543.3).

515.2.13 *Marking the Course*

The marking of the course must be clear so that the competitor is never in doubt where the course goes. At OWG and WSC the colours of the markings have to be determined and described in the course descriptions.

515.2.14 *Marking the Course - Kilometer signs*

Kilometer signs must mark the accumulated distance skied along the course. At OWG, WSC, JWSC and WC-NC competitions, every kilometer must be marked. For all other FIS competitions, this marking should be done whenever possible.

515.2.15 *Marking the Course - Barriers*

Forks and intersections on the course must be marked clearly by visible signage and fences must be placed across unused parts of the course.

515.2.16 *Course Protection*

At OWG, WSC, JWSC and WC-NC competitions the courses must be fenced along both sides at all places where spectators can potentially interfere with the competitors.

515.2.17 *Structure of Finish Area*

The layout of the finish area in Nordic Combined consists of the home stretch, as straight as possible to the finish line approx. 100–150 m and the finish zone which is the last 50 m before the finish line. The beginning of this zone must be clearly marked with a coloured line. This zone is a minimum of 9 m wide and is separated in 3 corridors that must be clearly marked and highly visible but do not interfere with the skis.

515.2.18 *Marking Finish Line*

The finish line must be clearly marked by a coloured line with a width of max. 10 cm. The use of coloured planks (v-boards) placed lower than the prepared snow is recommended. The finish line must be placed at a right angle to the incoming finish lanes.

516 Information for Spectators and Press

516.1 Information for Spectators

In addition to receiving information via the public address system, competitors and spectators should be informed by electronic scoreboards. The scoreboard shall display the competitor's start number, the distance jumped, the style score given by each Judge, the total point score, and current place in the competition. The scores of the five Judges must be published at the same time. At the Cross-Country competition the scoreboards must show the intermediate times and the ranking with the time differences.

516.2 Stands for Media Representatives

Optimal working conditions and places shall be provided for representatives from television, radio, newspapers, periodicals, and photography agencies. These conditions shall include continuous information (start lists, current positions and changes of ranking), access to optimal viewing positions, and an assigned area equipped with trouble-free technical devices to facilitate the performance of their duties.
The use of flashbulbs or other lighting devices is prohibited during the jumping competition, for these devices can interrupt and disturb jumpers and their movements.

520 Competition and Competitors

521 Requirements of the Competitors

521.1 Age Categories

Two age categories have been established for FIS Nordic Combined competitions:

– Juniors: up to 20 years of age on January 1st of the current calender year
– Seniors: all competitors over the age limit for Juniors

521.1.1 In OWG, WSC and World Cup competitions, all competitors shall start in one category.

At WC and WSC a competitor must have reached his 16th birthday before the end of the calendar year (1st January – 31st December) in question:

– WC 2016/17 and WSC 2017, competitors born 2001 and earlier
– WC 2017/18, competitors born 2002 and earlier
– WC 2018/19 and WSC 2019, competitors born 2003 and earlier

Nordic Junior World Ski Championships
A competitor must have reached his 16th birthday before the end of the calendar year (1st January – 31st December) in question:

Season	Age	Years of birth
2016/17	16-20	1997, 1998, 1999, 2000, 2001
2017/18	16-20	1998, 1999, 2000, 2001, 2002
2018/19	16-20	1999, 2000, 2001, 2002, 2003

521.1.2 For all other international competitions, separate age groups may be established. The entry form must advise participants what the various age groups will be.

521.1.3 Junior competitors may start in the Senior category provided their National Ski Association has entered their name in that category. However, Juniors wishing to start in this category must have the skills to compete in the Senior class.

521.1.4 Qualification
For participation at WSC an athlete must fulfil the following qualification criteria:

- regular participation in WC-NC, COC-NC or other Cup systems
- JWSC or Youth events and
- he must participate in a national competition system.

522 Entry

522.1 Each National Ski Association must enter their competitors for international competitions according to the final entry date or by the participation conditions within the official FIS entry form.

522.2 Competition Entry

At OWG, WSC and JWSC two hours prior to the designated team captains' meeting, each nation must present at the race office the starting order of their competitors by name. This entry form must contain:
FIS Code / Family name / first name / Club / year of birth / starting group or ranking position.
In exceptional cases the Jury may shorten this time period.

522.3 Entry by Team

Entry for the nations as per the rules art. 522.2. The entry by competitor's name and position for the first discipline must be made two hours prior to the team captain's meeting, for the second discipline immediately after the end of the first competition but no later than 15 min. after the announcement of unofficial result. In exceptional cases the Jury may shorten or extend these time periods.

522.4 Entering Substitution and Late Entries

522.4.1 Late Entries
A late entry in a Gundersen competition is possible only if it occurs prior to the start of the jumping competition and in a Mass start competition prior to the start of the Cross-Country race.

522.4.2 Substitution
After the draw, a competitor can only be substituted if he can not start due to force majeure (injury, illness, etcand if the Jury permits the substitution. This has to be certified by a medical doctor and communicated to the Jury until 2 hours before the start.

522.4.3 In case of an accident during warming up, the Jury can permit a substitute later than 2 hours before the start (injury confirmed by a medical doctor).

313.4.4 If the withdrawn competitor was selected for doping control then this test must still be carried out and must also be carried out on the substitute competitor. If the withdrawn competitor produces a positive test, no substitute will be allowed.

522.4.5 The Jury has to make also the decision, in which place in the starter field the substituted competitor may start (e.g. in the same place, in it’s ranking position or at the beginning of a group).
Exception: The substitute athlete must start in the same Team/Team Sprint position as the substituted athlete. The Team’s starting order cannot be changed.

313.4.5 Competitors, who are on the starting list and cannot take part in the competition because of illness or other reasons, must be reported by the team captain to the competition secretary at latest 30 min. before the start. If any of these competitors were selected for doping control, they must still be tested.

523 Draw

523.1 Principles

523.1.1 For international competitions, the draw is carried out by using a random double selection.

523.1.2 It is possible to have the draw conducted prior to the team captains' meeting under the supervision of the Jury.

523.2 Individual Competitions

523.2.1 *Gundersen method*

The starting order at OWG, WSC, WC-NC and COC-NC in Ski Jumping for the official trainings, provisional competition round, trial and competition round will be based on the reverse order of the actual Cup standings. Competitors without any points in the Cup Standings will be drawn in groups before those competitors with points.

A draw is only carried out for Ski Jumping at JWSC. The starting order for the groups is: I, II, III, IV.

523.2.2 *Mass start*

The start order by Mass start competitions is based on the actual World Cup standings. The leader of the ranking list will receive the first number. Competitors without any points will be drawn in groups at the end of the start field.

523.2.3 *FIS Competitions*

At competitions without ranking lists, the start order is realized by draw. The Jury must decide on the number of groups and the number of athletes per nation within a group based on the field size.

523.3 Team Competitions

523.3.1 For OWG, WSC and WC-NC competitions the start order of Team Gundersen and Team Sprint competitions will be based on reverse order of the actual Nation’s Cup standings. By equal point standings the start order will be made by draw in the team captain’s meeting between the equal placed teams. Teams without Nation’s Cup points or rankings start in the beginning of the competition. The start order must be made by draw.

For JWSC the start order is determined according to the reserve ranking from the previous JWSC.

523.3.2 *FIS Competitions*

The start position will be made by draw or as per a special rule.

524 Training before the Competitions

524.1 Ski Jumping

524.1.1 All training on the competition jumping hill before the competition (official training) must be within the schedule assigned by the OC and under the supervision of the Jury.
Any additional training made independently under self responsibility and/or direction of a trainer (free training) during the scheduled organisation days is not permissible.

524.1.2 At the official training for the competition only the registered competitors as well as the additional fore jumpers specified by the Competition Committee can participate.
At the OWG, WSC, JWSC and Cup competitions the right to participate during the official training is based on the actual rules and regulations.

524.1.3 For International NC competitions (FIS), the jumping hill must be available for training a minimum of one day. For the OWG and the WSC, the jumping hill must be available for training three days before the competition. The Competition Committee shall consider both snow and weather conditions when scheduling training sessions. It is the responsibility of the Competition Committee to provide optimal training conditions for all competitors.

524.1.4 If possible, training sessions shall be scheduled at the same time of day as the competition. All information pertaining to the training schedule or possible changes must be presented in due time.

524.1.5 The jumping hill must be in good condition for all training sessions and must be prepared as it would be for the competition. An adequate number of officials and hill packers must be present during the training sessions.

524.1.6 During all training sessions, distances shall be supervised and the maximum length of inrun decided and fixed by the Jury.

524.1.7 On-site first-aid personnel must be present during all training sessions to provide any necessary medical assistance.

524.1.8 To guarantee an equal opportunity, both jumping hills are to be closed for training and competition 14 days prior the first training day of the OWG respectively WSC.
The competition dates have to be scheduled in such a way that all three training days, according to the above articles are realized on the first jumping hill to be used prior to the first competition, subsequent training on the same hill for the second competition is additional. The same condition must be present for training days prior to the second jumping competition on the new jumping hill.

524.2 Cross-Country

Competitors and team officials should be given the opportunity to train and inspect the course in competition conditions. When possible, the course should be open two days before the competition. The Jury may close the course or limit the use of the course to certain sections or hours.

525 Competition Realisation

525.1 Ski Jumping

525.1.1 *Number of Jumps*

For all competitions, with exception of the Mass start and IG 15 km (two scored competition rounds Ski Jumping), one competition round in Ski Jumping will be held which will give the calculation basis for the converted time difference for the Gundersen method. One trial jump (round) must be included in the competition program. The decision to use the trial jump is up to the jumpers.

PCR - Junior World Ski Championships (JWSC)

The provisional competition round (PCR) will be carried out according to the regulations for a competition round. The scores can be used as a result for the start of the Cross-Country race only if the actual competition round Ski Jumping cannot be carried out. This score can be used only one time.

525.1.2 *In-Run Lenght*

The Jury shall decide the length of in-run (starting place) to be used. Once a majority decision has been reached on the start to be used, its length must remain the same for the entire round of jumps unless the round is stopped and restarted. No jumper is permitted to use a greater length of inrun (higher start) than determined by the Jury.

If the so called wind/gate compensation system is in place the Jury may change the length of the in-run even during a competiton round in order to approach the principles of fairness and safety. Such a decision must be based on an unanimous decision of the Jury. The wind and gate compensation factor will be indluded in the total score.

A trainer/coach is entitled to reduce the length of in-run for his respective atehlete. This has to be announced within the red phase of the starting procedure of the athlete concerned (does only apply for WC competitions). In such a case, the gate compensation factor is only calculated, if the athlete jumps at least 95 % of the HS distance.

525.1.3 The jumper is not allowed to use ski poles or any other kind of assistance. Nor is the jumper allowed to obtain outside assistance. Competitors who violate this rule will be disqualified.

525.1.4 When the hill is clear and the officials are ready, the chief of competition or authorized assistant shall give the start signal from the Judges tower for each competitor. No more than one signal should be used to initiate the exact time of the start control.

525.1.5 The start signal shall be determined by a green light displayed on the traffic light. If such a starting device is not available, the jumper can be signalled that the hill is clear by the waving of a flag by a control official located on the takeoff platform.

525.1.6 The jumper must have completely finished the jump before the next starting signal may be given.

525.1.7 It is the responsibility of the chief of competition to coordinate communication among all officials. This to include, the chief of hill, his various assistants at the takeoff, on the outrun, at the wind-measuring devices that the hill is clear, that all officials are ready, and that weather (wind) conditions are fair.

525.1.8 The starter shall report to the chief of competition the number of the upcoming jumper and the competitor's readiness to start.

525.1.9 It is the competitor's responsibility to be ready at the start when the starting number is called. The Jumper has according to the respective mode of the start time installation (10 seconds in case of three phase mode and 10 – 15 seconds in case of two phase mode) to leave the start after the start signal has been given. If the jumper has not left the start gate by the end of the start time, the hill will automatically be closed (see art. 514.1.7.1, 514.1.7.2).

525.1.10 During the starting procedure the jumper must have the opportunity to clearly observe the automatic countdown display (e.g. a programmable digital clock) (see art. above).

525.1.11 The jumper has to start within the start time. If the start signal is interrupted during the competitor's starting period for any reason, for example unstable weather conditions, the starting process will begin again.

525.1.12 The jumper must not start before the official starting signal or intentionally delay readiness to receive signals from a third person. Feigning problems with skis, bindings, equipment, or clothing is inexcusable. Both types of actions will as a rule cause disqualification.

525.1.13 A competitor hindered by „force majeure“ who arrives late at the start may appeal to the Jury. After considering all the facts reported, the Jury may allow the competitor to participate in the remaining part of the competition out of starting order.

525.1.14 *Repetition of a Jump*
A competitor hindered or interfered with during the jump by an error on the part of an official, an animal, spectators or any other „force majeure“ may appeal to the Jury. After considering the facts reported, the Jury shall either allow or reject a repeat of the jump. In case of one of the above mentioned reasons, the Jury is entitled to allow repetition of the jump from their own point of view.

525.1.15 If combined ski jumping is carried out together with special ski jumping, the combined competitors should be drawn in a separate group. The combined competitors can be divided into subgroups.

525.1.16 If possible, style points shall be displayed after each competitor’s jump (open scoring). An acoustic announcement concerning style points awarded is not permitted.

525.1.17 *95 % Rule*
A jumper, who has reached 95 % of the maximum length of the longest jump but has a fall, has the right to participate in the next round in addition to the qualified jumper (if the wind/gate compensation is used, the compensated distance is the basis).

525.2 Cross-Country

525.2.1 *Gundersen Method*

For the Gundersen method the winner of the jumping competition starts first, the second ranked starts next, etc. The start interval is the result of the converted point differences into time differences. The start times are rounded to full seconds.

525.2.2 *Mass start*

Start positions will be determined by draw or an actual FIS Cup ranking list.

525.2.2.1 At WSC and WC-NC or other FIS Cup competitions the start positions will be determined according the actual World Cup or other Cup standings.

525.2.3 *Instruction for the „Wave start“*

The Jury is responsible to make the decision about the "Wave start" and appropriate start time within the start list. The competitors start in groups in 10 sec. interval. The decision for these groups will be made according to the length of the course and the venue. Competitors who have been lapped must be pulled from the race only for OWG, WSC, WC-NC and SGP. For the final result, the removed athlete(s) will be ranked and get their corresponding cup points at the place when they were removed. Special regulation IG see art. 540.3.

525.2.4 *Responsibilities of Officials and Others*

525.2.4.1 If required, the Jury will issue special regulations for officials, media and service people and any other non-competitors, to ensure order on the course, in the stadium and in the team preparation area before, during and after the competition.

For order and control on the courses the following principles apply:

- from 5 minutes before the start until the time the course closers have passed, all officials, coaches, non-competitors and other accredited persons, are no longer permitted to ski on the course. During the competition, these persons must take fixed locations beside the course and must stand without skis on.
- while giving intermediate times and information to competitors, officials, coaches and others are not allowed to run more than 30 m beside the competitors.
- while doing this work officials and others have to ensure not to obstruct competitors.
- while giving refreshments to the competitors the coaches must ensure not to obstruct competitors.

525.2.5 Wax testing and warming up on the ski competition course must always be done in the competition course direction. Anyone testing skis on the competition course must consider the safety of others on the course and the course preparation. Electronic timing devices used for testing skis will not be allowed on the course during the competition or official training.

525.2.5.1 In order to obtain clean TV coverage and for safety reasons parts of the competition course may be closed for all but the competitors taking part in the competition. The Jury can allow ski testing and warming up by competitors on parts of the competition course before and during the competition. Athletes and service personnel, wearing special bibs may be allowed to ski on these parts of the competition course.

525.2.5.2 A ski glide testing area with testing tracks for all participating teams must be located close to the stadium. It should be close to the team wax cabins and warm-up track. The testing tracks must be prepared to the same standard as the competition course.

525.2.5.2 Warm up courses should be prepared as close as possible to the stadium.

525.2.6 *Schedule Postponement*

With difficult weather conditions the Jury may postpone the competition. The decision by the Jury must be made not later then 30 minutes before regular starting time.

525.2.7 *Responsibilities of the competitors*

525.2.7.1 In all training and competition situations the athlete must act with due care taking into account the course conditions, visibility and competitor congestion.

525.2.7.2 In all training and competition situations the athletes must always ski in the competition course direction.

525.2.7.3 Competitors must follow the instructions (course opening times, wearing bibs, training, ski testing, etc.) issued by the Jury or OC in order to ensure order on the course, in the stadium and in the team preparation area before, during and after the competition.

525.2.7.4 The competitor is responsible for arriving at the start and starting at the correct time.

525.2.7.5 If transponders or GPS are used it is mandatory for the competitors to wear these equipment.

525.2.8 Competitors must follow the marked course from start to finish and must pass all controllers.

525.2.8.1 If a competitor skis on a wrong section or leaves the marked course, he should return to the point where they made the error. In order to do so, the competitor may have to ski against the correct ski direction and shall be totally responsible for ensuring that they do not obstruct or endanger other competitors.

525.2.9 They have to cover the whole distance on their skis using only their own means of propulsion. Help from pacemakers or pushing is not allowed.

525.2.10 In all competitions obstruction is not allowed. This behavior is defined as deliberately impeding, blocking (by not following best line), charging or pushing any competitor with any part of the body or ski equipment.

525.2.11 *Equipment exchange*

525.2.11.1 In all competitions poles may be changed.

525.2.11.2 Skis may be changed only if:
The skis or bindings are broken or damaged. The equipment failure must be proven to the Jury after the competition.

In the case of a ski exchange, the competitor must do it outside the track without help from any other people.

525.2.12 Waxing, scraping or cleaning of the competitor's skis during the competition is forbidden. It is not allowed to place branches, tools or materials on or adjacent to the groomed course.

525.2.13 *Position for a Competitor at the Start*
The competitor must have his feet infront of the start line and remain stationary. The poles remain stationary and should be placed behind the starting line.

525.2.14 *Early Start for a Competitor*
Each competitor is responsible himself to start at the right starting time. A competitor who starts too early must come back and pass through the starting line again. In this case, his starting time will be the time on the start list.
Competitors who do not re-cross the starting line after an early start must be disqualified. To cross the marked starting line with the tip oft he first shoe markst he beginning oft he race. In order to get a clear presentation of evidence, adequate technical equipment must be installed in the starting area to cover the start procedure (art. 514.2.1).

525.2.15 *Late Start for a Competitor*
A competitor who starts late must not interfere with the start of other competitors.

525.2.16 *Overtaking*
During an individual- or team competition *a* competitor who is being overtaken must give way on the first demand. This applies in free technique courses when the skier being overtaken may have to restrict his skating action.

For all competitions, when overtaking occurs, competitors must not cause any obstruction (art. 525.2.10).

The responsibility for a correct passing without obstruction is on the overtaken skier. The overtaken skier must have his skis in front of the skis of the overtaken skier before skiing his best line.

525.2.16.1 *Marked Corridors*
In sections with marked corriedors (e.g. finish zone) the competitors should choose a corridor. A competitor is allowed to leave the chosen corridor as long as ICR art. 525.2.10 is upheld.

525.2.17 *Team and Team Sprint Exchange*
In a team event, the exchange is achieved by the arriving competitor, with a tap of the hand on any part of the next competitor's body while both competitors are in the relay exchange zone.
If the relay hand-over occurs before or after (outside) the exchange zone, it will be considered as a false start and the procedure must be repeated within

the exchange zone. Relay teams who have made a false start and do not return to the start again correctly must be disqualified. The next competitor may only enter the relay exchange zone when summoned. Any method of pushing the starting competitor is forbidden.

525.2.18 The competitor is ranked if all the parts of his body have crossed the finish line without any outside help.

525.2.19 *Did Not Finish*
If competitors abandon the competition before the finish, they must inform the first official they meet and they are responsible for returning the transponders and the start bib as soon as possible.

525.2.20 The competitors must comply with the instructions of competition officials.

525.2.21 The competitor must comply with all aspects of the medical code (see art. 221).

526 Bibs

526.1 It is mandatory for the competitor to wear his start number during the official training (Ski Jumping and Cross-Country) and competition at OWG, WSC and WC-NC. Competitiors who violate this ruling will be disqualified.

526.2 For JWSC, COC-NC and international Nordic Combined competitions it is mandatory for the competitor to wear his start number during all official jumping rounds (training and competiton). Competitiors who violate this ruling will be disqualified.

526.3 The start numbers must be legible from the back and the front. They must not hinder the competitor in any way. The size and the shape are described in the rules for competition equipment. It is not permitted to change the size, the shape and the method of attachment of the start number.

526.4 Cross-Country
For OWG, WSC, JWSC and WC-NC all start numbers used in all competition formats must also have numbers on both sides of the bib.

526.5 Leg Bibs
At OWG, WSC, JWSC, WC-NC and COC-NC for all Gundersen, the Mass start and the last competitor of the Team competitions numbers are fastened to the thighs (outside) for the identification of the competitor and the verification of results.

526.6 Team Competitions
For each group, the team start numbers will be a different colour (same for both Ski Jumping and Cross-Country). For OWG, WSC, JWSC, WC-NC and COC-NC competitions they will be:

- 1st group = red start numbers
- 2nd group = green start numbers
- 3rd group = yellow start numbers

- 4th group = blue start numbers.

527 Calculating and Announcement of Results

527.1 Start and Result Lists

The following elements provide the basic format information for all lists:

– Name of the competition
– Date and place of competition
– Name of the hill and reference to its K-point and Hill Size (HS) or
– Name of course and reference to technical parameters
– HD, MC, TC, length of rounds
– Names and country of each Jumping Judge
– Names and country of each Jury member
– Information on the current weather (snow conditions, temperature, wind, etc.)
– Number of entered, started, finished, not finished and disqualified competitors
– Additional for each competitor
– Rank
– Bib number
– Last and first name, nation and/or club
– For each jump, the following information shall be recorded separately:
– Distance jumped, inrun velocity, distance points
– Style points
– Collective points per round and
– on the end of the line the total points or
– Cross-Country time and rank
– Calculated points after Cross-Country race (Mass start)

527.2 Ski Jumping

527.2.1 Format for Trainings Lists

For the official training results, in addition to the general points listed above, the following elements must be listed:
inrun velocity/rank, distance jumped/rank, starting gate for each round

527.2.2 Instructions for the Start Lists

See art. 527

527.2.3 Final Result Lists

See art. 527

527.2.3.1 Style Points

Scoring starts with the scores of five Jumping Judges, and then the highest and lowest scores are eliminated. The three remaining scores are added. The sum of these scores is the total style points for a jump. The guidelines for the recording of the Jumping Judges note are given with in the ICR book III art. 431.

527.2.3.2 *Distance Points*

The points scored for the distances jumped are calculated on basis of the jumping hill. The point for one m is based on a points table determined on the K point of the hill.

K-Point Distance	Meter Value
20 – 24 m	4,8 pts./m
25 – 29 m	4,4 pts./m
30 – 34 m	4,0 pts./m
35 – 39 m	3,6 pts./m
40 – 44 m	3,2 pts./m
45 – 59 m	2,8 pts./m
60 – 74 m	2,4 pts./m
75 – 99 m	2,0 pts./m
100 m and larger	1,8 pts./m

The K-point of the jumping hill acts as the table point; consequently, the K-point distance equals 60 distance points. After the m value of the hill has been determined, the distance difference of the measured lengths for jumps must be calculated. Distances shorter than the K-point are calculated by multiplying the m value by the length difference and subtracting this number from 60. By contrast, distances longer than the K-point are calculated by multiplying the m value by the length difference and adding this number to 60.

527.2.3.3 *Collective Point Score*

This score is calculated by adding the style points and the distance points together.

527.2.3.4 *Total Point Score*

This score is calculated by adding together the collective point scores from the competitive jumping rounds. The jumper with the highest total point score is the winner.

527.2.3.5 *Identical Scores*

When two or more jumpers have identical scores, a tie is declared, and the jumpers are awarded the same place. The following position(s) shall be displaced (eliminated) in accordance with the number of tied places. In the final result list, ties' shall be listed in reverse order of the jumper's start number (the higher start number first).

527.3 Announcement of the Jumping Results (Intermediate result)

An unofficial results list will be posted immediately after the competition. The chief of calculations and the competition secretary examine and compare the unofficial results list with the original recording lists. The competition secretary then presents the final list for approval to the Jury. If the Jury has not received any protests, the results list will be published as the intermediate results after the protest time. The protest time as a rule is 15 minutes after the end of the competition. Team captains' meeting can decide on a shorter protest time.

527.3.1 *Style Judges Deduction Point List*

At OWG, WSC, WC-NC and COC-NC for each round of jumps an additional list concerning the style point deductions must be made.

527.4 Cross-Country

527.4.1 *Cross-Country Calculation Table*

The points or time differences between the competitors and to the winner of the Jumping competition or Cross-Country competition will be calculated for establishing the result difference between the competitors. This calculation based on the Nordic Combined table. The value of either time or points must be mathematically rounded depending on the competition format.

According to the length of the race course the following tables will be used. For the calculation a six decimal point place is used:

5 km course:	1 min.	=	15 points
10 km course:	1 min.	=	15 points
15 km course:	1 min	=	15 points
2 x 7.5 km course:	1 min.	=	30 points
4 x 5 km course:	1 min.	=	45 points

Conversion tables by deviating distances are to be specified in sole responsibility of the national Ski Federations.

527.4.2 *Free Technique*

Free technique includes all Cross-Country skiing techniques.

527.5 Final Result List

After finishing of a Nordic Combined competition the TD and the Chief of Competition must sign the Official result list to confirm the correctness of the result.

528 Competition Formats

OWG, WSC, JWSC, WC-NC and COC –NC

528.1 Olympic Winter Games (OWS)

Individual Gundersen	LH 10 km
Individual Gundersen	NH 10 km
Team Gundersen	NH 4x5 km

528.2 World Ski Championships (WSC)

Individual Gundersen	NH 10 km
Team Gundersen	NH 4x5 km
Individual Gundersen	LH 10 km
Team Sprint	LH 2x7.5 km

528.3 Junior World Ski Championships (JWSC)

Individual Gundersen	NH 10 km
Team Gundersen	NH 4x5 km
Individual Gundersen	NH 5 km

528.4 **World Cup**

Individual Gundersen	NH or LH 10 km
Team Gundersen	NH or LH 4x5 km
Team Sprint	NH or LH 2x7.5 km

528.5 **Continental Cup**

Individual Gundersen	NH or LH 10 km
Team Gundersen	NH or LH 4x5 km
Team Sprint	NH or LH 2x7.5 km

Other formats are possible as long as the format is described in the respective Cup Rules.

530 Sanctions and Protests

The following articles 531, 532 and 533 have to be applied on the basis of
- art. 223 (sanctions),
- art. 224 (procedural guidelines) and
- art. 225 (appeals commission)

of the joint regulations for all competitions.

531 Sanctions

531.1 General Conditions (see art. 223.1)

531.1.1 *Sanction may apply,*
- is in violation or non-observance of competition rules, or
- constitutes non-compliance with directives of the jury or individual members of the jury in accordance with 224.2 or
- constitutes unsportsmanlike behaviour is to consider whether the conduct was intentional or unintentional behaviour is present or whether the conduct arose from circumstances of an emergency.

531.1.2 Sanctions may apply by the FIS Nordic Combined Committee
- against a TD or TD Assistant who has made irregular or unfair decisions and has personally misbehaved
- against a distance measurer who intentionally executes false or improper measurements and has personally misbehaved.

531.1.3 *Not Permitted to Start*
A competitor will not be permitted to start in any FIS International Ski competition who:

531.1.3.1 doesn´t meet the eligibility requirements of art. 203 (FIS-license);

531.1.3.2 enters under or by false data

531.1.3.3 doesn´t meet the age-group regulations (art. 521.1.1)

531.1.3.4 wears obscene names and/or symbols on clothing and equipment (art. 206.7) or behaves in an unsportsmanlike manner in the start area (art. 205.5)

531.1.3.5 violates the FIS rules in regard to equipment (art. 222) and commercial markings (art. 207)

531.1.3.6 refuses to undertake a FIS required medical examination (art. 221.2)

531.1.3.7 If a competitor has actually started in a competition and is later determined by the Jury to have been in violation of these rules the Jury must sanction the competitor.

531.2 Penalties

A penalty will be assessed by the Jury where the competitor:

531.2.1 violates the rules governing advertising on equipment (art. 207.1)

531.2.2 alters the start number in a way which is not allowed (art. 526.3)

531.2.3 violates the rules of responsibility of competitor during the competition or demonstrates unsportsmanlike behaviour (art. 525.2.15)

531.2.4 takes skis to the official ceremonies (art. 207.1.1)

531.3 Disqualifications

The jury must meet and decide if a competitor is to be disqualified (see art. 223.3.3) All relevant evidence must be carefully considered and the competitor must have the opportunity to defend himself (see art 224.7). A competitor will be considered to be disqualified if he

531.3.1 violates the rules of start procedure (art. 525.1.3, 525.1.4, 525.1.12, 525.1.13, 514.1.7.1, 514.1.7.2, 525.2.12, 525.2.14, 526.1, 526.2)

531.3.2 does not ski the entire marked course (art. 525.2.8)

531.3.3 violates the rules using transponder (art. 514.3, 525.2.7.5)

531.3.4 intentionally causes obstruction.

531.3.5 After disqualification, a competitor's name will be shown on a revised result list indicating his status as DSQ and no times must be printed for this competitor.

531.3.6 According to the rule 223.3.3 competitor shall only be disqualified if his mistake would result in an advantage for him with regard to the end result, unless the Rules state otherwise in an individual case.

532 Protests

532.1 Protests against the entry of a competitor must be delivered in writing to the competition secretary before the start of the competition.

532.2 Protests against the actions made by another competitor or an official during the competition must be made in writing to the competition secretary within 15 minutes after the completion of the competition.

532.2.1 At the OWG, a verbal protest must be submitted to any Jury Member within five (5) minutes.

532.3 Protests concerning incorrect calculations or result misprints shall be considered if sent by registered mail from the competitor's National Ski Association to the event organising association within one month of the date of the competition. If a mistake is proven, the correct results shall be republished and the awards redistributed if necessary.

532.4 The Jury must consider protests if they are made within the allowable time limit and a sum of CHF 100.– or the equivalent in another valid currency has been deposited with the competition secretary. This deposit will be returned if the protest is upheld.

532.5 A protest may be withdrawn by the protesting party before the publication of a decision by the Jury. In this case, the money deposit must be returned.

532.6 Protests not submitted on time or submitted without the protest fee are not to be considered.

532.7 Distances measured manually by distance measurers and style scorings of jumping judges or scoring at a Mass start competition by a Jury are subjective decisions (so called „statements of facts“) on real facts which are not repeatable and therefore, cannot be corrected. Therefore, protests against such subjective decisions aiming at a correction of the result are not allowed. This to include, protests concerning the start control procedure for ski jumping in situations of variable wind conditions.

533 Authorization

The following are authorized to submit protests:
- the National Ski Associations
- Team Captains.

533.1 *Settlement of Protests by the Jury*
The Jury meets to deal with the protests at a predetermined place and time fixed and announced by it.

533.2 At the vote on the protest, only the Jury members are to be present. The TD chairs the proceedings. Minutes of the proceedings are to be kept and signed by all voting members of the Jury. The decision requires a majority of all voting members of the Jury, not just of those present. In case of a tie, the TD's vote is decisive.

534 Right of Appeal

534.1 The Appeal

534.1.1 It can be made
- against all decisions of the Jury (see also ICR 224.11)
- against the official result lists. This appeal has to be directed exclusively against an obvious and proven calculation mistake.

534.1.2 Appeals must be submitted to the FIS by the NSA.

534.1.3 Deadlines

534.1.3.1 Appeals against the decisions of the Jury are to be submitted within 48 hours of the publication of the official results list.

534.1.3.2 The appeals against the official results are to be submitted within 30 days, including the day of the competition.

534.1.4 The decision concerning the appeals are taken by
- the Appeals Commission
- the FIS Court

534.2 *Postponing Effect*
The evidence submitted (protest, appeal) may not cause a postponement of the appeal.

534.3 Submission
All evidence must be in writing to be substantiated. Proof and evidence are to be included. Evidence submitted too late must be declined by the FIS (see 225.3). In order to file an appeal it must be accompanied with a deposit of CHF 500, which will be refunded if the appeal is upheld.

3rd Section

Special Regulations for the Competition Formats

540 Individual Gundersen Competition

540.1 Competition Realisation

For the Gundersen Individual competition, the Jumping competition is held first with the Cross-Country race being the second event. To have start right for the Cross-Country race it is necessary for the competitor to have taken part in the competition round for Ski Jumping.

540.2 Calculation

The calculation is based on the appropriate meter and point value according the art. 527.2.3.2 and 527.4.1. For the final result list the ranking must be fixed, if necessary with technical help. In case of two or more athletes arriving at the finish line with the identical times a decision is made by the use of the photo finish video or by finish referee (art. 514.2.5). In case when no visual differences between competitors can be determined with the assistance of the technical equipment, the same rank will be given in the final result. For cup competitions, the same points will be awarded.

540.3 Special Regulations

To prevent too large start time differences, the Jury can decide upon the use of the „wave start“ (art. 525.2.3). According to the adjusted final result list it is possible that a tie in the final ranking may occur. The ranking of the competitors in this situation is based upon art. 527.2.3.5 When this occurs in a cup point event, the following rule applies: the tie competitors get the same points, with the following points value being eliminated.
541 Individual Mass start Competition

541 Individual Mass Start Competition

541.1 Competition Realisation

The individual Mass start competition shall begin with a Mass start Cross-Country race followed by a two round Ski Jumping competition. The jump competition is held without the scoring of jumping style judges. The competition program must also include one trial round. The first round of the Jumping competition is in reverse order of Cross-Country results, i.e. the winner of Cross-Country race gets the last start number for Ski Jumping. The number of competitors in the final round will be reduced to the best 30 competitors (or different Cup rules) of the immediate result after the race and one jump.

541.2 Calculation

541.2.1 The time differences at the finish are rounded to the full second, calculated into points back, and then deducted from the 120 points base awarded to the winner. See art. 527.2.3.2 for the valid point table to be used. By manual calculation from the table following rules are valid: at existing 2 values the first value applies, at three to seven values applies the middle value, is the number of the values more largely for four and uneven applies the left value apart from the center.

541.2.2 For the Jumping competition, only the calculated distance points will be used for the ranking of the competitors. No style judging scores are used. Penalties for falls and no telemark landing will be as follows:

Fall:

– penalty for normal hill = 5 m = 10,0 points
– penalty for large hill = 7 m = 10,5 points

No Telemark landing

– penalty for normal hill = 2 m = 4,0 points
– penalty for large hill = 3 m = 4,5 points

541.2.3 No Telemark landing

A landing, without a telemark position will receive deductions, if at the impact of landing and straight wards, the telemark position is not visible.

541.2.4 Fall

Any contact with the body on a ski, snow or plastic surface will be deducted as a fall.

541.2.5 Under special situations, the Jury has the right to decide to finalize the competition with only one jump, if the second round cannot be finished. A calculation in a new conversion factor does not take place.

541.2.6 At WSC and WC-NC three style Judges are selected by draw to make this scoring.

541.3 Special Regulations

A unanimous decision concerning the penalty deduction must be taken, it must be decisive whether a telemark landing or fall occurred or not.

This penalty deduction will be considered a judging decision and therefore a decision that cannot be protested.

The start procedure for the Mass start is:

– The starter must position himself at the start so that he can easily be heard by all competitors.
– At the latest, one minute before the start the competitors are commanded to „go to the start“ line. Then they are informed „30 seconds to start“. At this time, the starting clock will be blocked and out of view of the competitors, only the starter can see the clock. At his discretion, the starter gives an acoustical start signal or a shot (these commands should be given in English at all competitions).
– Any false start will result in a „restart“ of the competition. The starter is required to give a restart signal (second shot) and must have assistants placed an effective distance down the track where it is possible to turn the competitors back. The competitor who made the false start will be put to the last row

542 Team Gundersen Competition

542.1 Competition Realisation

The Gundersen Team format consists of a ski jumping event by one round and a relay Cross-Country competition. At OWG, WSC, WC-NC and JWSC a team consists of four competitors.

542.2 Calculation

The calculation is based on the appropriate meter and point value according the art. 527.2.3.2 and 527.4.1. For the final result list the ranking must be fixed, if necessary with technical help. In case of two or more athletes arriving at the finish line with the identical times a decision is made by the use of the photo finish video or by finish referee (art. 514.2.5). In case when no visual differences between competitors can be determined with the assistance of the technical equipment, the same rank will be given in the final result. For cup competitions, the same points will be awarded. The start differences for the Cross-Country race will be calculated from the actual total points scored by each team from the Jump event.

542.3 Special Regulation

542.3.1 The selected 5 km course should use two times 2.5 km lap layout and meet the FIS homologation guidelines for this event.

542.2.2 A competitor who did not start in one round of the jump competition, or was disqualified within a round will get zero points.

542.3.3 If the conditions so demand, the length of the inrun can be adjusted for each group, or a round of jumps for one specific group can be cancelled and re-started

543 Team-Sprint

543.1 Competition Realisation

The competition consists of team Ski Jumping and a 2 x 7.5 km Cross-Country competition skied over short laps which have to be completed by both team members. A team consists of two competitors who must participate in and complete both disciplines (Ski Jumping and Cross-Country).

543.2 Calculation

The calculation is based on the appropriate meter and point value according to the art. 527.2.3.2 and 527.4.1.

For the final result list the ranking must be fixed, if necessary with technical help. In case of two or more athletes arriving at the finish line with the identical times a decision is made by the use of the photo finish video or by finish referee (art. 514.2.5). In case when no visual differences between competitors can be determined with the assistance of the technical equipment, the same rank will be given in the final result. For cup competitions, the same points will be awarded.

The calculation of the jumping result is the actual total points scored by both jumps for each team and will be used for the starting differences of the Cross-Country race.

543.3 Special Regulation

The start order for the jump event is based on the actual Nation's Cup ranking. For WSC or JWSC it’s only possible to start with one team per Nation, the start numbers will be distributed in the reverse order of the nation's ranking.
For World Cup or COC the number of participating teams will be according to the specific event rules.

The 2 x 7.5 km Sprint is to be carried out using laps of 1500 m in length, where the competitors exchange off after each lap.

After both competitors have completed two laps, the elimination modus will start, whereby the team/s which is/are overlapped must abandon the competition and will be taken out by the jury. The Nation cup points will be awarded based on the actual standing of the team when it was taken out from the competition. Only one team per nation will get points.

The exchange area (see article 515.2.12) must be designed in such way, that all teams are assigned a preparation area box (approx. 1.5 m width and 2.5 - 3 m in length). Each box is fenced to the exchange zone with all assigned boxes situated within the prepared 30 to 40 m tag zone. The entrance to the exchange area is on the beginning of the boxes area. After each exchange the athlete must go back to the box through a corridor on the end of the boxes. The competitor who is not skiing must wait in his box or the area behind. He can be coached and make preparations to his skis. For each box, one service personal for ski preparation is allowed. Only waxing equipment and the competitiors racing-ski are allowed in the box (no extra equipment or skis).

544 Summer Competitions

Summer competitions in Nordic Combined are possible. For the Jumping event the same regulations as winter competitions are valid. The Cross-Country event can be held using different equipment (Roller skis, Inline-Skates) or a running race. The invitation must state the competition format and race method.

4th Section

Tables for Nordic Combined Cross-Country

550 The Calculation of the Time Difference

550.1 In order to eliminate variations during the calculation of the time differences, the following principles are used:

550.2 The start differences for the Cross-Country event are based on the Ski Jumping result, this calculation is made according to either seconds per point or points per second.

550.3 The calculation made will be taken to the sixth decimal place. This will ensure that each point value calculation is factored with sufficient accuracy. The value of the seventh decimal point is ignored. Therefore, no rounding of the sixth decimal place value is to occur.

Example:
Default = 45 points per minute
1 Minute per 45 points = 60 seconds per 45 points
60 seconds: 45 points = 1,333333…sec/pts.
For calculation = 1,333333…sec/pts.
(6 decimal place)

550.4 Procedure for the Calculation of the Time Difference:

The calculated time differences will be rounded from 0,5 tenths to a full second:
0,499999 = 0
0,5 = 1

550.5 Calculation Example for Time Difference

Points difference	Seconds per point	Result	Time difference (sec)
50	1,333333	66,66665	67 (1:07)
22,3	1,333333	29,73333259	30 (0:30)
22,4	1,333333	29,333326	29 (0:29)

550.6 Procedure for the Calculation for the Point Difference

The calculated point difference will be rounded from 0,05 to a full tenth of a point:
0,0499999 = 0,0
0,05 = 0,1

550.7 Calculation Example for Point Difference

Time difference (sec)	Points per second	Result	Point diference
41 (0:41)	1,333333	30,7500077	30,8
106 (1:46)	1,333333	79,5000199	79,5
188 (3:08)	1,333333	141,000035	141,0

551 Table Value

Course (km)	Points/Minute	Seconds/Points
15	15	4,0
10	15	4,0
5	15	4,0
4 x 5 km	45	1,333333
2 x 7.5 km	30	2,0

Nordic Combined

Time Difference for **5 km** **10 km** **Individual Gundersen** **15.0** Pts/Min = 4.000000 sec/Pts

Massstart

Punkte	0.0	0.1	0.2	0.3	0.4	0.5	0.6	0.7	0.8	0.9
0	00:00	00:00	00:01	00:01	00:02	00:02	00:02	00:03	00:03	00:04
1	00:04	00:04	00:05	00:05	00:06	00:06	00:06	00:07	00:07	00:08
2	00:08	00:08	00:09	00:09	00:10	00:10	00:10	00:11	00:11	00:12
3	00:12	00:12	00:13	00:13	00:14	00:14	00:14	00:15	00:15	00:16
4	00:16	00:16	00:17	00:17	00:18	00:18	00:18	00:19	00:19	00:20
5	00:20	00:20	00:21	00:21	00:22	00:22	00:22	00:23	00:23	00:24
6	00:24	00:24	00:25	00:25	00:26	00:26	00:26	00:27	00:27	00:28
7	00:28	00:28	00:29	00:29	00:30	00:30	00:30	00:31	00:31	00:32
8	00:32	00:32	00:33	00:33	00:34	00:34	00:34	00:35	00:35	00:36
9	00:36	00:36	00:37	00:37	00:38	00:38	00:38	00:39	00:39	00:40
10	00:40	00:40	00:41	00:41	00:42	00:42	00:42	00:43	00:43	00:44
11	00:44	00:44	00:45	00:45	00:46	00:46	00:46	00:47	00:47	00:48
12	00:48	00:48	00:49	00:49	00:50	00:50	00:50	00:51	00:51	00:52
13	00:52	00:52	00:53	00:53	00:54	00:54	00:54	00:55	00:55	00:56
14	00:56	00:56	00:57	00:57	00:58	00:58	00:58	00:59	00:59	01:00
15	01:00	01:00	01:01	01:01	01:02	01:02	01:02	01:03	01:03	01:04
16	01:04	01:04	01:05	01:05	01:06	01:06	01:06	01:07	01:07	01:08
17	01:08	01:08	01:09	01:09	01:10	01:10	01:10	01:11	01:11	01:12
18	01:12	01:12	01:13	01:13	01:14	01:14	01:14	01:15	01:15	01:16
19	01:16	01:16	01:17	01:17	01:18	01:18	01:18	01:19	01:19	01:20
20	01:20	01:20	01:21	01:21	01:22	01:22	01:22	01:23	01:23	01:24
21	01:24	01:24	01:25	01:25	01:26	01:26	01:26	01:27	01:27	01:28
22	01:28	01:28	01:29	01:29	01:30	01:30	01:30	01:31	01:31	01:32
23	01:32	01:32	01:33	01:33	01:34	01:34	01:34	01:35	01:35	01:36
24	01:36	01:36	01:37	01:37	01:38	01:38	01:38	01:39	01:39	01:40
25	01:40	01:40	01:41	01:41	01:42	01:42	01:42	01:43	01:43	01:44
26	01:44	01:44	01:45	01:45	01:46	01:46	01:46	01:47	01:47	01:48
27	01:48	01:48	01:49	01:49	01:50	01:50	01:50	01:51	01:51	01:52
28	01:52	01:52	01:53	01:53	01:54	01:54	01:54	01:55	01:55	01:56
29	01:56	01:56	01:57	01:57	01:58	01:58	01:58	01:59	01:59	02:00
30	02:00	02:00	02:01	02:01	02:02	02:02	02:02	02:03	02:03	02:04
31	02:04	02:04	02:05	02:05	02:06	02:06	02:06	02:07	02:07	02:08
32	02:08	02:08	02:09	02:09	02:10	02:10	02:10	02:11	02:11	02:12
33	02:12	02:12	02:13	02:13	02:14	02:14	02:14	02:15	02:15	02:16
34	02:16	02:16	02:17	02:17	02:18	02:18	02:18	02:19	02:19	02:20
35	02:20	02:20	02:21	02:21	02:22	02:22	02:22	02:23	02:23	02:24
36	02:24	02:24	02:25	02:25	02:26	02:26	02:26	02:27	02:27	02:28
37	02:28	02:28	02:29	02:29	02:30	02:30	02:30	02:31	02:31	02:32
38	02:32	02:32	02:33	02:33	02:34	02:34	02:34	02:35	02:35	02:36
39	02:36	02:36	02:37	02:37	02:38	02:38	02:38	02:39	02:39	02:40
40	02:40	02:40	02:41	02:41	02:42	02:42	02:42	02:43	02:43	02:44
41	02:44	02:44	02:45	02:45	02:46	02:46	02:46	02:47	02:47	02:48

Nordic Combined

Time Difference for **5 km** **10 km** **Individual Gundersen Massstart** **15.0** Pts/Min = 4.000000 sec/Pts

Punkte	0.0	0.1	0.2	0.3	0.4	0.5	0.6	0.7	0.8	0.9
42	02:48	02:48	02:49	02:49	02:50	02:50	02:50	02:51	02:51	02:52
43	02:52	02:52	02:53	02:53	02:54	02:54	02:54	02:55	02:55	02:56
44	02:56	02:56	02:57	02:57	02:58	02:58	02:58	02:59	02:59	03:00
45	03:00	03:00	03:01	03:01	03:02	03:02	03:02	03:03	03:03	03:04
46	03:04	03:04	03:05	03:05	03:06	03:06	03:06	03:07	03:07	03:08
47	03:08	03:08	03:09	03:09	03:10	03:10	03:10	03:11	03:11	03:12
48	03:12	03:12	03:13	03:13	03:14	03:14	03:14	03:15	03:15	03:16
49	03:16	03:16	03:17	03:17	03:18	03:18	03:18	03:19	03:19	03:20
50	03:20	03:20	03:21	03:21	03:22	03:22	03:22	03:23	03:23	03:24
51	03:24	03:24	03:25	03:25	03:26	03:26	03:26	03:27	03:27	03:28
52	03:28	03:28	03:29	03:29	03:30	03:30	03:30	03:31	03:31	03:32
53	03:32	03:32	03:33	03:33	03:34	03:34	03:34	03:35	03:35	03:36
54	03:36	03:36	03:37	03:37	03:38	03:38	03:38	03:39	03:39	03:40
55	03:40	03:40	03:41	03:41	03:42	03:42	03:42	03:43	03:43	03:44
56	03:44	03:44	03:45	03:45	03:46	03:46	03:46	03:47	03:47	03:48
57	03:48	03:48	03:49	03:49	03:50	03:50	03:50	03:51	03:51	03:52
58	03:52	03:52	03:53	03:53	03:54	03:54	03:54	03:55	03:55	03:56
59	03:56	03:56	03:57	03:57	03:58	03:58	03:58	03:59	03:59	04:00
60	04:00	04:00	04:01	04:01	04:02	04:02	04:02	04:03	04:03	04:04
61	04:04	04:04	04:05	04:05	04:06	04:06	04:06	04:07	04:07	04:08
62	04:08	04:08	04:09	04:09	04:10	04:10	04:10	04:11	04:11	04:12
63	04:12	04:12	04:13	04:13	04:14	04:14	04:14	04:15	04:15	04:16
64	04:16	04:16	04:17	04:17	04:18	04:18	04:18	04:19	04:19	04:20
65	04:20	04:20	04:21	04:21	04:22	04:22	04:22	04:23	04:23	04:24
66	04:24	04:24	04:25	04:25	04:26	04:26	04:26	04:27	04:27	04:28
67	04:28	04:28	04:29	04:29	04:30	04:30	04:30	04:31	04:31	04:32
68	04:32	04:32	04:33	04:33	04:34	04:34	04:34	04:35	04:35	04:36
69	04:36	04:36	04:37	04:37	04:38	04:38	04:38	04:39	04:39	04:40
70	04:40	04:40	04:41	04:41	04:42	04:42	04:42	04:43	04:43	04:44
71	04:44	04:44	04:45	04:45	04:46	04:46	04:46	04:47	04:47	04:48
72	04:48	04:48	04:49	04:49	04:50	04:50	04:50	04:51	04:51	04:52
73	04:52	04:52	04:53	04:53	04:54	04:54	04:54	04:55	04:55	04:56
74	04:56	04:56	04:57	04:57	04:58	04:58	04:58	04:59	04:59	05:00
75	05:00	05:00	05:01	05:01	05:02	05:02	05:02	05:03	05:03	05:04
76	05:04	05:04	05:05	05:05	05:06	05:06	05:06	05:07	05:07	05:08
77	05:08	05:08	05:09	05:09	05:10	05:10	05:10	05:11	05:11	05:12
78	05:12	05:12	05:13	05:13	05:14	05:14	05:14	05:15	05:15	05:16
79	05:16	05:16	05:17	05:17	05:18	05:18	05:18	05:19	05:19	05:20
80	05:20	05:20	05:21	05:21	05:22	05:22	05:22	05:23	05:23	05:24
81	05:24	05:24	05:25	05:25	05:26	05:26	05:26	05:27	05:27	05:28
82	05:28	05:28	05:29	05:29	05:30	05:30	05:30	05:31	05:31	05:32
83	05:32	05:32	05:33	05:33	05:34	05:34	05:34	05:35	05:35	05:36

Nordic Combined

Time Difference for **5 km** **10 km** **Individual Gundersen Massstart** **15.0** Pts/Min = 4.000000 sec/Pts

Punkte	0.0	0.1	0.2	0.3	0.4	0.5	0.6	0.7	0.8	0.9
84	05:36	05:36	05:37	05:37	05:38	05:38	05:38	05:39	05:39	05:40
85	05:40	05:40	05:41	05:41	05:42	05:42	05:42	05:43	05:43	05:44
86	05:44	05:44	05:45	05:45	05:46	05:46	05:46	05:47	05:47	05:48
87	05:48	05:48	05:49	05:49	05:50	05:50	05:50	05:51	05:51	05:52
88	05:52	05:52	05:53	05:53	05:54	05:54	05:54	05:55	05:55	05:56
89	05:56	05:56	05:57	05:57	05:58	05:58	05:58	05:59	05:59	06:00
90	06:00	06:00	06:01	06:01	06:02	06:02	06:02	06:03	06:03	06:04
91	06:04	06:04	06:05	06:05	06:06	06:06	06:06	06:07	06:07	06:08
92	06:08	06:08	06:09	06:09	06:10	06:10	06:10	06:11	06:11	06:12
93	06:12	06:12	06:13	06:13	06:14	06:14	06:14	06:15	06:15	06:16
94	06:16	06:16	06:17	06:17	06:18	06:18	06:18	06:19	06:19	06:20
95	06:20	06:20	06:21	06:21	06:22	06:22	06:22	06:23	06:23	06:24
96	06:24	06:24	06:25	06:25	06:26	06:26	06:26	06:27	06:27	06:28
97	06:28	06:28	06:29	06:29	06:30	06:30	06:30	06:31	06:31	06:32
98	06:32	06:32	06:33	06:33	06:34	06:34	06:34	06:35	06:35	06:36
99	06:36	06:36	06:37	06:37	06:38	06:38	06:38	06:39	06:39	06:40
100	06:40	06:40	06:41	06:41	06:42	06:42	06:42	06:43	06:43	06:44
101	06:44	06:44	06:45	06:45	06:46	06:46	06:46	06:47	06:47	06:48
102	06:48	06:48	06:49	06:49	06:50	06:50	06:50	06:51	06:51	06:52
103	06:52	06:52	06:53	06:53	06:54	06:54	06:54	06:55	06:55	06:56
104	06:56	06:56	06:57	06:57	06:58	06:58	06:58	06:59	06:59	07:00
105	07:00	07:00	07:01	07:01	07:02	07:02	07:02	07:03	07:03	07:04
106	07:04	07:04	07:05	07:05	07:06	07:06	07:06	07:07	07:07	07:08
107	07:08	07:08	07:09	07:09	07:10	07:10	07:10	07:11	07:11	07:12
108	07:12	07:12	07:13	07:13	07:14	07:14	07:14	07:15	07:15	07:16
109	07:16	07:16	07:17	07:17	07:18	07:18	07:18	07:19	07:19	07:20
110	07:20	07:20	07:21	07:21	07:22	07:22	07:22	07:23	07:23	07:24
111	07:24	07:24	07:25	07:25	07:26	07:26	07:26	07:27	07:27	07:28
112	07:28	07:28	07:29	07:29	07:30	07:30	07:30	07:31	07:31	07:32
113	07:32	07:32	07:33	07:33	07:34	07:34	07:34	07:35	07:35	07:36
114	07:36	07:36	07:37	07:37	07:38	07:38	07:38	07:39	07:39	07:40
115	07:40	07:40	07:41	07:41	07:42	07:42	07:42	07:43	07:43	07:44
116	07:44	07:44	07:45	07:45	07:46	07:46	07:46	07:47	07:47	07:48
117	07:48	07:48	07:49	07:49	07:50	07:50	07:50	07:51	07:51	07:52
118	07:52	07:52	07:53	07:53	07:54	07:54	07:54	07:55	07:55	07:56
119	07:56	07:56	07:57	07:57	07:58	07:58	07:58	07:59	07:59	08:00
120	08:00	08:00	08:01	08:01	08:02	08:02	08:02	08:03	08:03	08:04
121	08:04	08:04	08:05	08:05	08:06	08:06	08:06	08:07	08:07	08:08
122	08:08	08:08	08:09	08:09	08:10	08:10	08:10	08:11	08:11	08:12
123	08:12	08:12	08:13	08:13	08:14	08:14	08:14	08:15	08:15	08:16
124	08:16	08:16	08:17	08:17	08:18	08:18	08:18	08:19	08:19	08:20
125	08:20	08:20	08:21	08:21	08:22	08:22	08:22	08:23	08:23	08:24

Nordic Combined

Time Difference for **5 km** **10 km** **Individual Gundersen** **15.0** Pts/Min = 4.000000 sec/Pts

Massstart

Punkte	0.0	0.1	0.2	0.3	0.4	0.5	0.6	0.7	0.8	0.9
126	08:24	08:24	08:25	08:25	08:26	08:26	08:26	08:27	08:27	08:28
127	08:28	08:28	08:29	08:29	08:30	08:30	08:30	08:31	08:31	08:32
128	08:32	08:32	08:33	08:33	08:34	08:34	08:34	08:35	08:35	08:36
129	08:36	08:36	08:37	08:37	08:38	08:38	08:38	08:39	08:39	08:40
130	08:40	08:40	08:41	08:41	08:42	08:42	08:42	08:43	08:43	08:44
131	08:44	08:44	08:45	08:45	08:46	08:46	08:46	08:47	08:47	08:48
132	08:48	08:48	08:49	08:49	08:50	08:50	08:50	08:51	08:51	08:52
133	08:52	08:52	08:53	08:53	08:54	08:54	08:54	08:55	08:55	08:56
134	08:56	08:56	08:57	08:57	08:58	08:58	08:58	08:59	08:59	09:00
135	09:00	09:00	09:01	09:01	09:02	09:02	09:02	09:03	09:03	09:04
136	09:04	09:04	09:05	09:05	09:06	09:06	09:06	09:07	09:07	09:08
137	09:08	09:08	09:09	09:09	09:10	09:10	09:10	09:11	09:11	09:12
138	09:12	09:12	09:13	09:13	09:14	09:14	09:14	09:15	09:15	09:16
139	09:16	09:16	09:17	09:17	09:18	09:18	09:18	09:19	09:19	09:20
140	09:20	09:20	09:21	09:21	09:22	09:22	09:22	09:23	09:23	09:24
141	09:24	09:24	09:25	09:25	09:26	09:26	09:26	09:27	09:27	09:28
142	09:28	09:28	09:29	09:29	09:30	09:30	09:30	09:31	09:31	09:32
143	09:32	09:32	09:33	09:33	09:34	09:34	09:34	09:35	09:35	09:36
144	09:36	09:36	09:37	09:37	09:38	09:38	09:38	09:39	09:39	09:40
145	09:40	09:40	09:41	09:41	09:42	09:42	09:42	09:43	09:43	09:44
146	09:44	09:44	09:45	09:45	09:46	09:46	09:46	09:47	09:47	09:48
147	09:48	09:48	09:49	09:49	09:50	09:50	09:50	09:51	09:51	09:52
148	09:52	09:52	09:53	09:53	09:54	09:54	09:54	09:55	09:55	09:56
149	09:56	09:56	09:57	09:57	09:58	09:58	09:58	09:59	09:59	10:00
150	10:00	10:00	10:01	10:01	10:02	10:02	10:02	10:03	10:03	10:04

Nordic Combined

Time Difference for **4x5 km Team Gundersen** **45.0** Pts/Min = 1.333 sec/Pt

Punkte	0.0	0.1	0.2	0.3	0.4	0.5	0.6	0.7	0.8	0.9
0	00:00	00:00	00:00	00:00	00:01	00:01	00:01	00:01	00:01	00:01
1	00:01	00:01	00:02	00:02	00:02	00:02	00:02	00:02	00:02	00:03
2	00:03	00:03	00:03	00:03	00:03	00:03	00:03	00:04	00:04	00:04
3	00:04	00:04	00:04	00:04	00:05	00:05	00:05	00:05	00:05	00:05
4	00:05	00:05	00:06	00:06	00:06	00:06	00:06	00:06	00:06	00:07
5	00:07	00:07	00:07	00:07	00:07	00:07	00:07	00:08	00:08	00:08
6	00:08	00:08	00:08	00:08	00:09	00:09	00:09	00:09	00:09	00:09
7	00:09	00:09	00:10	00:10	00:10	00:10	00:10	00:10	00:10	00:11
8	00:11	00:11	00:11	00:11	00:11	00:11	00:11	00:12	00:12	00:12
9	00:12	00:12	00:12	00:12	00:13	00:13	00:13	00:13	00:13	00:13
10	00:13	00:13	00:14	00:14	00:14	00:14	00:14	00:14	00:14	00:15
11	00:15	00:15	00:15	00:15	00:15	00:15	00:15	00:16	00:16	00:16
12	00:16	00:16	00:16	00:16	00:17	00:17	00:17	00:17	00:17	00:17
13	00:17	00:17	00:18	00:18	00:18	00:18	00:18	00:18	00:18	00:19
14	00:19	00:19	00:19	00:19	00:19	00:19	00:19	00:20	00:20	00:20
15	00:20	00:20	00:20	00:20	00:21	00:21	00:21	00:21	00:21	00:21
16	00:21	00:21	00:22	00:22	00:22	00:22	00:22	00:22	00:22	00:23
17	00:23	00:23	00:23	00:23	00:23	00:23	00:23	00:24	00:24	00:24
18	00:24	00:24	00:24	00:24	00:25	00:25	00:25	00:25	00:25	00:25
19	00:25	00:25	00:26	00:26	00:26	00:26	00:26	00:26	00:26	00:27
20	00:27	00:27	00:27	00:27	00:27	00:27	00:27	00:28	00:28	00:28
21	00:28	00:28	00:28	00:28	00:29	00:29	00:29	00:29	00:29	00:29
22	00:29	00:29	00:30	00:30	00:30	00:30	00:30	00:30	00:30	00:31
23	00:31	00:31	00:31	00:31	00:31	00:31	00:31	00:32	00:32	00:32
24	00:32	00:32	00:32	00:32	00:33	00:33	00:33	00:33	00:33	00:33
25	00:33	00:33	00:34	00:34	00:34	00:34	00:34	00:34	00:34	00:35
26	00:35	00:35	00:35	00:35	00:35	00:35	00:35	00:36	00:36	00:36
27	00:36	00:36	00:36	00:36	00:37	00:37	00:37	00:37	00:37	00:37
28	00:37	00:37	00:38	00:38	00:38	00:38	00:38	00:38	00:38	00:39
29	00:39	00:39	00:39	00:39	00:39	00:39	00:39	00:40	00:40	00:40
30	00:40	00:40	00:40	00:40	00:41	00:41	00:41	00:41	00:41	00:41
31	00:41	00:41	00:42	00:42	00:42	00:42	00:42	00:42	00:42	00:43
32	00:43	00:43	00:43	00:43	00:43	00:43	00:43	00:44	00:44	00:44
33	00:44	00:44	00:44	00:44	00:45	00:45	00:45	00:45	00:45	00:45
34	00:45	00:45	00:46	00:46	00:46	00:46	00:46	00:46	00:46	00:47
35	00:47	00:47	00:47	00:47	00:47	00:47	00:47	00:48	00:48	00:48
36	00:48	00:48	00:48	00:48	00:49	00:49	00:49	00:49	00:49	00:49
37	00:49	00:49	00:50	00:50	00:50	00:50	00:50	00:50	00:50	00:51
38	00:51	00:51	00:51	00:51	00:51	00:51	00:51	00:52	00:52	00:52

Nordic Combined										
Time Difference for		4x5 km	Team	Gundersen			45.0	Pts/Min = 1.333 sec/Pt		
Punkte	**0.0**	**0.1**	**0.2**	**0.3**	**0.4**	**0.5**	**0.6**	**0.7**	**0.8**	**0.9**
39	00:52	00:52	00:52	00:52	00:53	00:53	00:53	00:53	00:53	00:53
40	00:53	00:53	00:54	00:54	00:54	00:54	00:54	00:54	00:54	00:55
41	00:55	00:55	00:55	00:55	00:55	00:55	00:55	00:56	00:56	00:56
42	00:56	00:56	00:56	00:56	00:57	00:57	00:57	00:57	00:57	00:57
43	00:57	00:57	00:58	00:58	00:58	00:58	00:58	00:58	00:58	00:59
44	00:59	00:59	00:59	00:59	00:59	00:59	00:59	01:00	01:00	01:00
45	01:00	01:00	01:00	01:00	01:01	01:01	01:01	01:01	01:01	01:01
46	01:01	01:01	01:02	01:02	01:02	01:02	01:02	01:02	01:02	01:03
47	01:03	01:03	01:03	01:03	01:03	01:03	01:03	01:04	01:04	01:04
48	01:04	01:04	01:04	01:04	01:05	01:05	01:05	01:05	01:05	01:05
49	01:05	01:05	01:06	01:06	01:06	01:06	01:06	01:06	01:06	01:07
50	01:07	01:07	01:07	01:07	01:07	01:07	01:07	01:08	01:08	01:08
51	01:08	01:08	01:08	01:08	01:09	01:09	01:09	01:09	01:09	01:09
52	01:09	01:09	01:10	01:10	01:10	01:10	01:10	01:10	01:10	01:11
53	01:11	01:11	01:11	01:11	01:11	01:11	01:11	01:12	01:12	01:12
54	01:12	01:12	01:12	01:12	01:13	01:13	01:13	01:13	01:13	01:13
55	01:13	01:13	01:14	01:14	01:14	01:14	01:14	01:14	01:14	01:15
56	01:15	01:15	01:15	01:15	01:15	01:15	01:15	01:16	01:16	01:16
57	01:16	01:16	01:16	01:16	01:17	01:17	01:17	01:17	01:17	01:17
58	01:17	01:17	01:18	01:18	01:18	01:18	01:18	01:18	01:18	01:19
59	01:19	01:19	01:19	01:19	01:19	01:19	01:19	01:20	01:20	01:20
60	01:20	01:20	01:20	01:20	01:21	01:21	01:21	01:21	01:21	01:21
61	01:21	01:21	01:22	01:22	01:22	01:22	01:22	01:22	01:22	01:23
62	01:23	01:23	01:23	01:23	01:23	01:23	01:23	01:24	01:24	01:24
63	01:24	01:24	01:24	01:24	01:25	01:25	01:25	01:25	01:25	01:25
64	01:25	01:25	01:26	01:26	01:26	01:26	01:26	01:26	01:26	01:27
65	01:27	01:27	01:27	01:27	01:27	01:27	01:27	01:28	01:28	01:28
66	01:28	01:28	01:28	01:28	01:29	01:29	01:29	01:29	01:29	01:29
67	01:29	01:29	01:30	01:30	01:30	01:30	01:30	01:30	01:30	01:31
68	01:31	01:31	01:31	01:31	01:31	01:31	01:31	01:32	01:32	01:32
69	01:32	01:32	01:32	01:32	01:33	01:33	01:33	01:33	01:33	01:33
70	01:33	01:33	01:34	01:34	01:34	01:34	01:34	01:34	01:34	01:35
71	01:35	01:35	01:35	01:35	01:35	01:35	01:35	01:36	01:36	01:36
72	01:36	01:36	01:36	01:36	01:37	01:37	01:37	01:37	01:37	01:37
73	01:37	01:37	01:38	01:38	01:38	01:38	01:38	01:38	01:38	01:39
74	01:39	01:39	01:39	01:39	01:39	01:39	01:39	01:40	01:40	01:40
75	01:40	01:40	01:40	01:40	01:41	01:41	01:41	01:41	01:41	01:41
76	01:41	01:41	01:42	01:42	01:42	01:42	01:42	01:42	01:42	01:43
77	01:43	01:43	01:43	01:43	01:43	01:43	01:43	01:44	01:44	01:44

Nordic Combined										
Time Difference for		4x5 km	Team	Gundersen			45.0	Pts/Min = 1.333 sec/Pt		
Punkte	**0.0**	**0.1**	**0.2**	**0.3**	**0.4**	**0.5**	**0.6**	**0.7**	**0.8**	**0.9**
78	01:44	01:44	01:44	01:44	01:45	01:45	01:45	01:45	01:45	01:45
79	01:45	01:45	01:46	01:46	01:46	01:46	01:46	01:46	01:46	01:47
80	01:47	01:47	01:47	01:47	01:47	01:47	01:47	01:48	01:48	01:48
81	01:48	01:48	01:48	01:48	01:49	01:49	01:49	01:49	01:49	01:49
82	01:49	01:49	01:50	01:50	01:50	01:50	01:50	01:50	01:50	01:51
83	01:51	01:51	01:51	01:51	01:51	01:51	01:51	01:52	01:52	01:52
84	01:52	01:52	01:52	01:52	01:53	01:53	01:53	01:53	01:53	01:53
85	01:53	01:53	01:54	01:54	01:54	01:54	01:54	01:54	01:54	01:55
86	01:55	01:55	01:55	01:55	01:55	01:55	01:55	01:56	01:56	01:56
87	01:56	01:56	01:56	01:56	01:57	01:57	01:57	01:57	01:57	01:57
88	01:57	01:57	01:58	01:58	01:58	01:58	01:58	01:58	01:58	01:59
89	01:59	01:59	01:59	01:59	01:59	01:59	01:59	02:00	02:00	02:00
90	02:00	02:00	02:00	02:00	02:01	02:01	02:01	02:01	02:01	02:01
91	02:01	02:01	02:02	02:02	02:02	02:02	02:02	02:02	02:02	02:03
92	02:03	02:03	02:03	02:03	02:03	02:03	02:03	02:04	02:04	02:04
93	02:04	02:04	02:04	02:04	02:05	02:05	02:05	02:05	02:05	02:05
94	02:05	02:05	02:06	02:06	02:06	02:06	02:06	02:06	02:06	02:07
95	02:07	02:07	02:07	02:07	02:07	02:07	02:07	02:08	02:08	02:08
96	02:08	02:08	02:08	02:08	02:09	02:09	02:09	02:09	02:09	02:09
97	02:09	02:09	02:10	02:10	02:10	02:10	02:10	02:10	02:10	02:11
98	02:11	02:11	02:11	02:11	02:11	02:11	02:11	02:12	02:12	02:12
99	02:12	02:12	02:12	02:12	02:13	02:13	02:13	02:13	02:13	02:13
100	02:13	02:13	02:14	02:14	02:14	02:14	02:14	02:14	02:14	02:15
101	02:15	02:15	02:15	02:15	02:15	02:15	02:15	02:16	02:16	02:16
102	02:16	02:16	02:16	02:16	02:17	02:17	02:17	02:17	02:17	02:17
103	02:17	02:17	02:18	02:18	02:18	02:18	02:18	02:18	02:18	02:19
104	02:19	02:19	02:19	02:19	02:19	02:19	02:19	02:20	02:20	02:20
105	02:20	02:20	02:20	02:20	02:21	02:21	02:21	02:21	02:21	02:21
106	02:21	02:21	02:22	02:22	02:22	02:22	02:22	02:22	02:22	02:23
107	02:23	02:23	02:23	02:23	02:23	02:23	02:23	02:24	02:24	02:24
108	02:24	02:24	02:24	02:24	02:25	02:25	02:25	02:25	02:25	02:25
109	02:25	02:25	02:26	02:26	02:26	02:26	02:26	02:26	02:26	02:27
110	02:27	02:27	02:27	02:27	02:27	02:27	02:27	02:28	02:28	02:28
111	02:28	02:28	02:28	02:28	02:29	02:29	02:29	02:29	02:29	02:29
112	02:29	02:29	02:30	02:30	02:30	02:30	02:30	02:30	02:30	02:31
113	02:31	02:31	02:31	02:31	02:31	02:31	02:31	02:32	02:32	02:32
114	02:32	02:32	02:32	02:32	02:33	02:33	02:33	02:33	02:33	02:33
115	02:33	02:33	02:34	02:34	02:34	02:34	02:34	02:34	02:34	02:35
116	02:35	02:35	02:35	02:35	02:35	02:35	02:35	02:36	02:36	02:36

Nordic Combined										
Time Difference for		4x5 km	Team	Gundersen			45.0	Pts/Min = 1.333 sec/Pt		
Punkte	**0.0**	**0.1**	**0.2**	**0.3**	**0.4**	**0.5**	**0.6**	**0.7**	**0.8**	**0.9**
117	02:36	02:36	02:36	02:36	02:37	02:37	02:37	02:37	02:37	02:37
118	02:37	02:37	02:38	02:38	02:38	02:38	02:38	02:38	02:38	02:39
119	02:39	02:39	02:39	02:39	02:39	02:39	02:39	02:40	02:40	02:40
120	02:40	02:40	02:40	02:40	02:41	02:41	02:41	02:41	02:41	02:41
121	02:41	02:41	02:42	02:42	02:42	02:42	02:42	02:42	02:42	02:43
122	02:43	02:43	02:43	02:43	02:43	02:43	02:43	02:44	02:44	02:44
123	02:44	02:44	02:44	02:44	02:45	02:45	02:45	02:45	02:45	02:45
124	02:45	02:45	02:46	02:46	02:46	02:46	02:46	02:46	02:46	02:47
125	02:47	02:47	02:47	02:47	02:47	02:47	02:47	02:48	02:48	02:48
126	02:48	02:48	02:48	02:48	02:49	02:49	02:49	02:49	02:49	02:49
127	02:49	02:49	02:50	02:50	02:50	02:50	02:50	02:50	02:50	02:51
128	02:51	02:51	02:51	02:51	02:51	02:51	02:51	02:52	02:52	02:52
129	02:52	02:52	02:52	02:52	02:53	02:53	02:53	02:53	02:53	02:53
130	02:53	02:53	02:54	02:54	02:54	02:54	02:54	02:54	02:54	02:55
131	02:55	02:55	02:55	02:55	02:55	02:55	02:55	02:56	02:56	02:56
132	02:56	02:56	02:56	02:56	02:57	02:57	02:57	02:57	02:57	02:57
133	02:57	02:57	02:58	02:58	02:58	02:58	02:58	02:58	02:58	02:59
134	02:59	02:59	02:59	02:59	02:59	02:59	02:59	03:00	03:00	03:00
135	03:00	03:00	03:00	03:00	03:01	03:01	03:01	03:01	03:01	03:01
136	03:01	03:01	03:02	03:02	03:02	03:02	03:02	03:02	03:02	03:03
137	03:03	03:03	03:03	03:03	03:03	03:03	03:03	03:04	03:04	03:04
138	03:04	03:04	03:04	03:04	03:05	03:05	03:05	03:05	03:05	03:05
139	03:05	03:05	03:06	03:06	03:06	03:06	03:06	03:06	03:06	03:07
140	03:07	03:07	03:07	03:07	03:07	03:07	03:07	03:08	03:08	03:08
141	03:08	03:08	03:08	03:08	03:09	03:09	03:09	03:09	03:09	03:09
142	03:09	03:09	03:10	03:10	03:10	03:10	03:10	03:10	03:10	03:11
143	03:11	03:11	03:11	03:11	03:11	03:11	03:11	03:12	03:12	03:12
144	03:12	03:12	03:12	03:12	03:13	03:13	03:13	03:13	03:13	03:13
145	03:13	03:13	03:14	03:14	03:14	03:14	03:14	03:14	03:14	03:15
146	03:15	03:15	03:15	03:15	03:15	03:15	03:15	03:16	03:16	03:16
147	03:16	03:16	03:16	03:16	03:17	03:17	03:17	03:17	03:17	03:17
148	03:17	03:17	03:18	03:18	03:18	03:18	03:18	03:18	03:18	03:19
149	03:19	03:19	03:19	03:19	03:19	03:19	03:19	03:20	03:20	03:20
150	03:20	03:20	03:20	03:20	03:21	03:21	03:21	03:21	03:21	03:21
151	03:21	03:21	03:22	03:22	03:22	03:22	03:22	03:22	03:22	03:23
152	03:23	03:23	03:23	03:23	03:23	03:23	03:23	03:24	03:24	03:24
153	03:24	03:24	03:24	03:24	03:25	03:25	03:25	03:25	03:25	03:25
154	03:25	03:25	03:26	03:26	03:26	03:26	03:26	03:26	03:26	03:27
155	03:27	03:27	03:27	03:27	03:27	03:27	03:27	03:28	03:28	03:28

Nordic Combined										
Time Difference for		4x5 km	Team	Gundersen			45.0	Pts/Min = 1.333 sec/Pt		
Punkte	**0.0**	**0.1**	**0.2**	**0.3**	**0.4**	**0.5**	**0.6**	**0.7**	**0.8**	**0.9**
156	03:28	03:28	03:28	03:28	03:29	03:29	03:29	03:29	03:29	03:29
157	03:29	03:29	03:30	03:30	03:30	03:30	03:30	03:30	03:30	03:31
158	03:31	03:31	03:31	03:31	03:31	03:31	03:31	03:32	03:32	03:32
159	03:32	03:32	03:32	03:32	03:33	03:33	03:33	03:33	03:33	03:33
160	03:33	03:33	03:34	03:34	03:34	03:34	03:34	03:34	03:34	03:35
161	03:35	03:35	03:35	03:35	03:35	03:35	03:35	03:36	03:36	03:36
162	03:36	03:36	03:36	03:36	03:37	03:37	03:37	03:37	03:37	03:37
163	03:37	03:37	03:38	03:38	03:38	03:38	03:38	03:38	03:38	03:39
164	03:39	03:39	03:39	03:39	03:39	03:39	03:39	03:40	03:40	03:40
165	03:40	03:40	03:40	03:40	03:41	03:41	03:41	03:41	03:41	03:41
166	03:41	03:41	03:42	03:42	03:42	03:42	03:42	03:42	03:42	03:43
167	03:43	03:43	03:43	03:43	03:43	03:43	03:43	03:44	03:44	03:44
168	03:44	03:44	03:44	03:44	03:45	03:45	03:45	03:45	03:45	03:45
169	03:45	03:45	03:46	03:46	03:46	03:46	03:46	03:46	03:46	03:47
170	03:47	03:47	03:47	03:47	03:47	03:47	03:47	03:48	03:48	03:48
171	03:48	03:48	03:48	03:48	03:49	03:49	03:49	03:49	03:49	03:49
172	03:49	03:49	03:50	03:50	03:50	03:50	03:50	03:50	03:50	03:51
173	03:51	03:51	03:51	03:51	03:51	03:51	03:51	03:52	03:52	03:52
174	03:52	03:52	03:52	03:52	03:53	03:53	03:53	03:53	03:53	03:53
175	03:53	03:53	03:54	03:54	03:54	03:54	03:54	03:54	03:54	03:55
176	03:55	03:55	03:55	03:55	03:55	03:55	03:55	03:56	03:56	03:56
177	03:56	03:56	03:56	03:56	03:57	03:57	03:57	03:57	03:57	03:57
178	03:57	03:57	03:58	03:58	03:58	03:58	03:58	03:58	03:58	03:59
179	03:59	03:59	03:59	03:59	03:59	03:59	03:59	04:00	04:00	04:00
180	04:00	04:00	04:00	04:00	04:01	04:01	04:01	04:01	04:01	04:01
181	04:01	04:01	04:02	04:02	04:02	04:02	04:02	04:02	04:02	04:03
182	04:03	04:03	04:03	04:03	04:03	04:03	04:03	04:04	04:04	04:04
183	04:04	04:04	04:04	04:04	04:05	04:05	04:05	04:05	04:05	04:05
184	04:05	04:05	04:06	04:06	04:06	04:06	04:06	04:06	04:06	04:07
185	04:07	04:07	04:07	04:07	04:07	04:07	04:07	04:08	04:08	04:08
186	04:08	04:08	04:08	04:08	04:09	04:09	04:09	04:09	04:09	04:09
187	04:09	04:09	04:10	04:10	04:10	04:10	04:10	04:10	04:10	04:11
188	04:11	04:11	04:11	04:11	04:11	04:11	04:11	04:12	04:12	04:12
189	04:12	04:12	04:12	04:12	04:13	04:13	04:13	04:13	04:13	04:13
190	04:13	04:13	04:14	04:14	04:14	04:14	04:14	04:14	04:14	04:15
191	04:15	04:15	04:15	04:15	04:15	04:15	04:15	04:16	04:16	04:16
192	04:16	04:16	04:16	04:16	04:17	04:17	04:17	04:17	04:17	04:17
193	04:17	04:17	04:18	04:18	04:18	04:18	04:18	04:18	04:18	04:19
194	04:19	04:19	04:19	04:19	04:19	04:19	04:19	04:20	04:20	04:20

Nordic Combined										
Time Difference for		4x5 km	Team	Gundersen			45.0	Pts/Min = 1.333 sec/Pt		
Punkte	**0.0**	**0.1**	**0.2**	**0.3**	**0.4**	**0.5**	**0.6**	**0.7**	**0.8**	**0.9**
195	04:20	04:20	04:20	04:20	04:21	04:21	04:21	04:21	04:21	04:21
196	04:21	04:21	04:22	04:22	04:22	04:22	04:22	04:22	04:22	04:23
197	04:23	04:23	04:23	04:23	04:23	04:23	04:23	04:24	04:24	04:24
198	04:24	04:24	04:24	04:24	04:25	04:25	04:25	04:25	04:25	04:25
199	04:25	04:25	04:26	04:26	04:26	04:26	04:26	04:26	04:26	04:27
200	04:27	04:27	04:27	04:27	04:27	04:27	04:27	04:28	04:28	04:28
201	04:28	04:28	04:28	04:28	04:29	04:29	04:29	04:29	04:29	04:29
202	04:29	04:29	04:30	04:30	04:30	04:30	04:30	04:30	04:30	04:31
203	04:31	04:31	04:31	04:31	04:31	04:31	04:31	04:32	04:32	04:32
204	04:32	04:32	04:32	04:32	04:33	04:33	04:33	04:33	04:33	04:33
205	04:33	04:33	04:34	04:34	04:34	04:34	04:34	04:34	04:34	04:35
206	04:35	04:35	04:35	04:35	04:35	04:35	04:35	04:36	04:36	04:36
207	04:36	04:36	04:36	04:36	04:37	04:37	04:37	04:37	04:37	04:37
208	04:37	04:37	04:38	04:38	04:38	04:38	04:38	04:38	04:38	04:39
209	04:39	04:39	04:39	04:39	04:39	04:39	04:39	04:40	04:40	04:40
210	04:40	04:40	04:40	04:40	04:41	04:41	04:41	04:41	04:41	04:41
211	04:41	04:41	04:42	04:42	04:42	04:42	04:42	04:42	04:42	04:43
212	04:43	04:43	04:43	04:43	04:43	04:43	04:43	04:44	04:44	04:44
213	04:44	04:44	04:44	04:44	04:45	04:45	04:45	04:45	04:45	04:45
214	04:45	04:45	04:46	04:46	04:46	04:46	04:46	04:46	04:46	04:47
215	04:47	04:47	04:47	04:47	04:47	04:47	04:47	04:48	04:48	04:48
216	04:48	04:48	04:48	04:48	04:49	04:49	04:49	04:49	04:49	04:49
217	04:49	04:49	04:50	04:50	04:50	04:50	04:50	04:50	04:50	04:51
218	04:51	04:51	04:51	04:51	04:51	04:51	04:51	04:52	04:52	04:52
219	04:52	04:52	04:52	04:52	04:53	04:53	04:53	04:53	04:53	04:53
220	04:53	04:53	04:54	04:54	04:54	04:54	04:54	04:54	04:54	04:55
221	04:55	04:55	04:55	04:55	04:55	04:55	04:55	04:56	04:56	04:56
222	04:56	04:56	04:56	04:56	04:57	04:57	04:57	04:57	04:57	04:57
223	04:57	04:57	04:58	04:58	04:58	04:58	04:58	04:58	04:58	04:59
224	04:59	04:59	04:59	04:59	04:59	04:59	04:59	05:00	05:00	05:00
225	05:00	05:00	05:00	05:00	05:01	05:01	05:01	05:01	05:01	05:01
226	05:01	05:01	05:02	05:02	05:02	05:02	05:02	05:02	05:02	05:03
227	05:03	05:03	05:03	05:03	05:03	05:03	05:03	05:04	05:04	05:04
228	05:04	05:04	05:04	05:04	05:05	05:05	05:05	05:05	05:05	05:05
229	05:05	05:05	05:06	05:06	05:06	05:06	05:06	05:06	05:06	05:07
230	05:07	05:07	05:07	05:07	05:07	05:07	05:07	05:08	05:08	05:08
231	05:08	05:08	05:08	05:08	05:09	05:09	05:09	05:09	05:09	05:09
232	05:09	05:09	05:10	05:10	05:10	05:10	05:10	05:10	05:10	05:11
233	05:11	05:11	05:11	05:11	05:11	05:11	05:11	05:12	05:12	05:12

Nordic Combined										
Time Difference for		4x5 km	Team	Gundersen			45.0	Pts/Min = 1.333 sec/Pt		
Punkte	**0.0**	**0.1**	**0.2**	**0.3**	**0.4**	**0.5**	**0.6**	**0.7**	**0.8**	**0.9**
234	05:12	05:12	05:12	05:12	05:13	05:13	05:13	05:13	05:13	05:13
235	05:13	05:13	05:14	05:14	05:14	05:14	05:14	05:14	05:14	05:15
236	05:15	05:15	05:15	05:15	05:15	05:15	05:15	05:16	05:16	05:16
237	05:16	05:16	05:16	05:16	05:17	05:17	05:17	05:17	05:17	05:17
238	05:17	05:17	05:18	05:18	05:18	05:18	05:18	05:18	05:18	05:19
239	05:19	05:19	05:19	05:19	05:19	05:19	05:19	05:20	05:20	05:20
240	05:20	05:20	05:20	05:20	05:21	05:21	05:21	05:21	05:21	05:21
241	05:21	05:21	05:22	05:22	05:22	05:22	05:22	05:22	05:22	05:23
242	05:23	05:23	05:23	05:23	05:23	05:23	05:23	05:24	05:24	05:24
243	05:24	05:24	05:24	05:24	05:25	05:25	05:25	05:25	05:25	05:25
244	05:25	05:25	05:26	05:26	05:26	05:26	05:26	05:26	05:26	05:27
245	05:27	05:27	05:27	05:27	05:27	05:27	05:27	05:28	05:28	05:28
246	05:28	05:28	05:28	05:28	05:29	05:29	05:29	05:29	05:29	05:29
247	05:29	05:29	05:30	05:30	05:30	05:30	05:30	05:30	05:30	05:31
248	05:31	05:31	05:31	05:31	05:31	05:31	05:31	05:32	05:32	05:32
249	05:32	05:32	05:32	05:32	05:33	05:33	05:33	05:33	05:33	05:33
250	05:33	05:33	05:34	05:34	05:34	05:34	05:34	05:34	05:34	05:35
251	05:35	05:35	05:35	05:35	05:35	05:35	05:35	05:36	05:36	05:36
252	05:36	05:36	05:36	05:36	05:37	05:37	05:37	05:37	05:37	05:37
253	05:37	05:37	05:38	05:38	05:38	05:38	05:38	05:38	05:38	05:39
254	05:39	05:39	05:39	05:39	05:39	05:39	05:39	05:40	05:40	05:40
255	05:40	05:40	05:40	05:40	05:41	05:41	05:41	05:41	05:41	05:41
256	05:41	05:41	05:42	05:42	05:42	05:42	05:42	05:42	05:42	05:43
257	05:43	05:43	05:43	05:43	05:43	05:43	05:43	05:44	05:44	05:44
258	05:44	05:44	05:44	05:44	05:45	05:45	05:45	05:45	05:45	05:45
259	05:45	05:45	05:46	05:46	05:46	05:46	05:46	05:46	05:46	05:47
260	05:47	05:47	05:47	05:47	05:47	05:47	05:47	05:48	05:48	05:48
261	05:48	05:48	05:48	05:48	05:49	05:49	05:49	05:49	05:49	05:49
262	05:49	05:49	05:50	05:50	05:50	05:50	05:50	05:50	05:50	05:51
263	05:51	05:51	05:51	05:51	05:51	05:51	05:51	05:52	05:52	05:52
264	05:52	05:52	05:52	05:52	05:53	05:53	05:53	05:53	05:53	05:53
265	05:53	05:53	05:54	05:54	05:54	05:54	05:54	05:54	05:54	05:55
266	05:55	05:55	05:55	05:55	05:55	05:55	05:55	05:56	05:56	05:56
267	05:56	05:56	05:56	05:56	05:57	05:57	05:57	05:57	05:57	05:57
268	05:57	05:57	05:58	05:58	05:58	05:58	05:58	05:58	05:58	05:59
269	05:59	05:59	05:59	05:59	05:59	05:59	05:59	06:00	06:00	06:00
270	06:00	06:00	06:00	06:00	06:01	06:01	06:01	06:01	06:01	06:01

Nordic Combined

Time Difference for **2 x 7,5 km** **Team Sprint** **30.0** Pts/Min = 2.000000 sec/Pts

Pts	0.0	0.1	0.2	0.3	0.4	0.5	0.6	0.7	0.8	0.9
0	00:00	00:00	00:00	00:01	00:01	00:01	00:01	00:01	00:02	00:02
1	00:02	00:02	00:02	00:03	00:03	00:03	00:03	00:03	00:04	00:04
2	00:04	00:04	00:04	00:05	00:05	00:05	00:05	00:05	00:06	00:06
3	00:06	00:06	00:06	00:07	00:07	00:07	00:07	00:07	00:08	00:08
4	00:08	00:08	00:08	00:09	00:09	00:09	00:09	00:09	00:10	00:10
5	00:10	00:10	00:10	00:11	00:11	00:11	00:11	00:11	00:12	00:12
6	00:12	00:12	00:12	00:13	00:13	00:13	00:13	00:13	00:14	00:14
7	00:14	00:14	00:14	00:15	00:15	00:15	00:15	00:15	00:16	00:16
8	00:16	00:16	00:16	00:17	00:17	00:17	00:17	00:17	00:18	00:18
9	00:18	00:18	00:18	00:19	00:19	00:19	00:19	00:19	00:20	00:20
10	00:20	00:20	00:20	00:21	00:21	00:21	00:21	00:21	00:22	00:22
11	00:22	00:22	00:22	00:23	00:23	00:23	00:23	00:23	00:24	00:24
12	00:24	00:24	00:24	00:25	00:25	00:25	00:25	00:25	00:26	00:26
13	00:26	00:26	00:26	00:27	00:27	00:27	00:27	00:27	00:28	00:28
14	00:28	00:28	00:28	00:29	00:29	00:29	00:29	00:29	00:30	00:30
15	00:30	00:30	00:30	00:31	00:31	00:31	00:31	00:31	00:32	00:32
16	00:32	00:32	00:32	00:33	00:33	00:33	00:33	00:33	00:34	00:34
17	00:34	00:34	00:34	00:35	00:35	00:35	00:35	00:35	00:36	00:36
18	00:36	00:36	00:36	00:37	00:37	00:37	00:37	00:37	00:38	00:38
19	00:38	00:38	00:38	00:39	00:39	00:39	00:39	00:39	00:40	00:40
20	00:40	00:40	00:40	00:41	00:41	00:41	00:41	00:41	00:42	00:42
21	00:42	00:42	00:42	00:43	00:43	00:43	00:43	00:43	00:44	00:44
22	00:44	00:44	00:44	00:45	00:45	00:45	00:45	00:45	00:46	00:46
23	00:46	00:46	00:46	00:47	00:47	00:47	00:47	00:47	00:48	00:48
24	00:48	00:48	00:48	00:49	00:49	00:49	00:49	00:49	00:50	00:50
25	00:50	00:50	00:50	00:51	00:51	00:51	00:51	00:51	00:52	00:52
26	00:52	00:52	00:52	00:53	00:53	00:53	00:53	00:53	00:54	00:54
27	00:54	00:54	00:54	00:55	00:55	00:55	00:55	00:55	00:56	00:56
28	00:56	00:56	00:56	00:57	00:57	00:57	00:57	00:57	00:58	00:58
29	00:58	00:58	00:58	00:59	00:59	00:59	00:59	00:59	01:00	01:00
30	01:00	01:00	01:00	01:01	01:01	01:01	01:01	01:01	01:02	01:02
31	01:02	01:02	01:02	01:03	01:03	01:03	01:03	01:03	01:04	01:04
32	01:04	01:04	01:04	01:05	01:05	01:05	01:05	01:05	01:06	01:06
33	01:06	01:06	01:06	01:07	01:07	01:07	01:07	01:07	01:08	01:08
34	01:08	01:08	01:08	01:09	01:09	01:09	01:09	01:09	01:10	01:10
35	01:10	01:10	01:10	01:11	01:11	01:11	01:11	01:11	01:12	01:12
36	01:12	01:12	01:12	01:13	01:13	01:13	01:13	01:13	01:14	01:14
37	01:14	01:14	01:14	01:15	01:15	01:15	01:15	01:15	01:16	01:16
38	01:16	01:16	01:16	01:17	01:17	01:17	01:17	01:17	01:18	01:18
39	01:18	01:18	01:18	01:19	01:19	01:19	01:19	01:19	01:20	01:20
40	01:20	01:20	01:20	01:21	01:21	01:21	01:21	01:21	01:22	01:22
41	01:22	01:22	01:22	01:23	01:23	01:23	01:23	01:23	01:24	01:24
42	01:24	01:24	01:24	01:25	01:25	01:25	01:25	01:25	01:26	01:26
43	01:26	01:26	01:26	01:27	01:27	01:27	01:27	01:27	01:28	01:28
44	01:28	01:28	01:28	01:29	01:29	01:29	01:29	01:29	01:30	01:30
45	01:30	01:30	01:30	01:31	01:31	01:31	01:31	01:31	01:32	01:32
46	01:32	01:32	01:32	01:33	01:33	01:33	01:33	01:33	01:34	01:34
47	01:34	01:34	01:34	01:35	01:35	01:35	01:35	01:35	01:36	01:36
48	01:36	01:36	01:36	01:37	01:37	01:37	01:37	01:37	01:38	01:38
49	01:38	01:38	01:38	01:39	01:39	01:39	01:39	01:39	01:40	01:40
50	01:40	01:40	01:40	01:41	01:41	01:41	01:41	01:41	01:42	01:42

51	01:42	01:42	01:42	01:43	01:43	01:43	01:43	01:43	01:44	01:44
52	01:44	01:44	01:44	01:45	01:45	01:45	01:45	01:45	01:46	01:46
53	01:46	01:46	01:46	01:47	01:47	01:47	01:47	01:47	01:48	01:48
54	01:48	01:48	01:48	01:49	01:49	01:49	01:49	01:49	01:50	01:50
55	01:50	01:50	01:50	01:51	01:51	01:51	01:51	01:51	01:52	01:52
56	01:52	01:52	01:52	01:53	01:53	01:53	01:53	01:53	01:54	01:54
57	01:54	01:54	01:54	01:55	01:55	01:55	01:55	01:55	01:56	01:56
58	01:56	01:56	01:56	01:57	01:57	01:57	01:57	01:57	01:58	01:58
59	01:58	01:58	01:58	01:59	01:59	01:59	01:59	01:59	02:00	02:00
60	02:00	02:00	02:00	02:01	02:01	02:01	02:01	02:01	02:02	02:02
61	02:02	02:02	02:02	02:03	02:03	02:03	02:03	02:03	02:04	02:04
62	02:04	02:04	02:04	02:05	02:05	02:05	02:05	02:05	02:06	02:06
63	02:06	02:06	02:06	02:07	02:07	02:07	02:07	02:07	02:08	02:08
64	02:08	02:08	02:08	02:09	02:09	02:09	02:09	02:09	02:10	02:10
65	02:10	02:10	02:10	02:11	02:11	02:11	02:11	02:11	02:12	02:12
66	02:12	02:12	02:12	02:13	02:13	02:13	02:13	02:13	02:14	02:14
67	02:14	02:14	02:14	02:15	02:15	02:15	02:15	02:15	02:16	02:16
68	02:16	02:16	02:16	02:17	02:17	02:17	02:17	02:17	02:18	02:18
69	02:18	02:18	02:18	02:19	02:19	02:19	02:19	02:19	02:20	02:20
70	02:20	02:20	02:20	02:21	02:21	02:21	02:21	02:21	02:22	02:22
71	02:22	02:22	02:22	02:23	02:23	02:23	02:23	02:23	02:24	02:24
72	02:24	02:24	02:24	02:25	02:25	02:25	02:25	02:25	02:26	02:26
73	02:26	02:26	02:26	02:27	02:27	02:27	02:27	02:27	02:28	02:28
74	02:28	02:28	02:28	02:29	02:29	02:29	02:29	02:29	02:30	02:30
75	02:30	02:30	02:30	02:31	02:31	02:31	02:31	02:31	02:32	02:32
76	02:32	02:32	02:32	02:33	02:33	02:33	02:33	02:33	02:34	02:34
77	02:34	02:34	02:34	02:35	02:35	02:35	02:35	02:35	02:36	02:36
78	02:36	02:36	02:36	02:37	02:37	02:37	02:37	02:37	02:38	02:38
79	02:38	02:38	02:38	02:39	02:39	02:39	02:39	02:39	02:40	02:40
80	02:40	02:40	02:40	02:41	02:41	02:41	02:41	02:41	02:42	02:42
81	02:42	02:42	02:42	02:43	02:43	02:43	02:43	02:43	02:44	02:44
82	02:44	02:44	02:44	02:45	02:45	02:45	02:45	02:45	02:46	02:46
83	02:46	02:46	02:46	02:47	02:47	02:47	02:47	02:47	02:48	02:48
84	02:48	02:48	02:48	02:49	02:49	02:49	02:49	02:49	02:50	02:50
85	02:50	02:50	02:50	02:51	02:51	02:51	02:51	02:51	02:52	02:52
86	02:52	02:52	02:52	02:53	02:53	02:53	02:53	02:53	02:54	02:54
87	02:54	02:54	02:54	02:55	02:55	02:55	02:55	02:55	02:56	02:56
88	02:56	02:56	02:56	02:57	02:57	02:57	02:57	02:57	02:58	02:58
89	02:58	02:58	02:58	02:59	02:59	02:59	02:59	02:59	03:00	03:00
90	03:00	03:00	03:00	03:01	03:01	03:01	03:01	03:01	03:02	03:02
91	03:02	03:02	03:02	03:03	03:03	03:03	03:03	03:03	03:04	03:04
92	03:04	03:04	03:04	03:05	03:05	03:05	03:05	03:05	03:06	03:06
93	03:06	03:06	03:06	03:07	03:07	03:07	03:07	03:07	03:08	03:08
94	03:08	03:08	03:08	03:09	03:09	03:09	03:09	03:09	03:10	03:10
95	03:10	03:10	03:10	03:11	03:11	03:11	03:11	03:11	03:12	03:12
96	03:12	03:12	03:12	03:13	03:13	03:13	03:13	03:13	03:14	03:14
97	03:14	03:14	03:14	03:15	03:15	03:15	03:15	03:15	03:16	03:16
98	03:16	03:16	03:16	03:17	03:17	03:17	03:17	03:17	03:18	03:18
99	03:18	03:18	03:18	03:19	03:19	03:19	03:19	03:19	03:20	03:20
100	03:20	03:20	03:20	03:21	03:21	03:21	03:21	03:21	03:22	03:22
101	03:22	03:22	03:22	03:23	03:23	03:23	03:23	03:23	03:24	03:24
102	03:24	03:24	03:24	03:25	03:25	03:25	03:25	03:25	03:26	03:26
103	03:26	03:26	03:26	03:27	03:27	03:27	03:27	03:27	03:28	03:28
104	03:28	03:28	03:28	03:29	03:29	03:29	03:29	03:29	03:30	03:30
105	03:30	03:30	03:30	03:31	03:31	03:31	03:31	03:31	03:32	03:32
106	03:32	03:32	03:32	03:33	03:33	03:33	03:33	03:33	03:34	03:34
107	03:34	03:34	03:34	03:35	03:35	03:35	03:35	03:35	03:36	03:36

108	03:36	03:36	03:36	03:37	03:37	03:37	03:37	03:37	03:38	03:38
109	03:38	03:38	03:38	03:39	03:39	03:39	03:39	03:39	03:40	03:40
110	03:40	03:40	03:40	03:41	03:41	03:41	03:41	03:41	03:42	03:42
111	03:42	03:42	03:42	03:43	03:43	03:43	03:43	03:43	03:44	03:44
112	03:44	03:44	03:44	03:45	03:45	03:45	03:45	03:45	03:46	03:46
113	03:46	03:46	03:46	03:47	03:47	03:47	03:47	03:47	03:48	03:48
114	03:48	03:48	03:48	03:49	03:49	03:49	03:49	03:49	03:50	03:50
115	03:50	03:50	03:50	03:51	03:51	03:51	03:51	03:51	03:52	03:52
116	03:52	03:52	03:52	03:53	03:53	03:53	03:53	03:53	03:54	03:54
117	03:54	03:54	03:54	03:55	03:55	03:55	03:55	03:55	03:56	03:56
118	03:56	03:56	03:56	03:57	03:57	03:57	03:57	03:57	03:58	03:58
119	03:58	03:58	03:58	03:59	03:59	03:59	03:59	03:59	04:00	04:00
120	04:00	04:00	04:00	04:01	04:01	04:01	04:01	04:01	04:02	04:02
121	04:02	04:02	04:02	04:03	04:03	04:03	04:03	04:03	04:04	04:04
122	04:04	04:04	04:04	04:05	04:05	04:05	04:05	04:05	04:06	04:06
123	04:06	04:06	04:06	04:07	04:07	04:07	04:07	04:07	04:08	04:08
124	04:08	04:08	04:08	04:09	04:09	04:09	04:09	04:09	04:10	04:10
125	04:10	04:10	04:10	04:11	04:11	04:11	04:11	04:11	04:12	04:12
126	04:12	04:12	04:12	04:13	04:13	04:13	04:13	04:13	04:14	04:14
127	04:14	04:14	04:14	04:15	04:15	04:15	04:15	04:15	04:16	04:16
128	04:16	04:16	04:16	04:17	04:17	04:17	04:17	04:17	04:18	04:18
129	04:18	04:18	04:18	04:19	04:19	04:19	04:19	04:19	04:20	04:20
130	04:20	04:20	04:20	04:21	04:21	04:21	04:21	04:21	04:22	04:22
131	04:22	04:22	04:22	04:23	04:23	04:23	04:23	04:23	04:24	04:24
132	04:24	04:24	04:24	04:25	04:25	04:25	04:25	04:25	04:26	04:26
133	04:26	04:26	04:26	04:27	04:27	04:27	04:27	04:27	04:28	04:28
134	04:28	04:28	04:28	04:29	04:29	04:29	04:29	04:29	04:30	04:30
135	04:30	04:30	04:30	04:31	04:31	04:31	04:31	04:31	04:32	04:32
136	04:32	04:32	04:32	04:33	04:33	04:33	04:33	04:33	04:34	04:34
137	04:34	04:34	04:34	04:35	04:35	04:35	04:35	04:35	04:36	04:36
138	04:36	04:36	04:36	04:37	04:37	04:37	04:37	04:37	04:38	04:38
139	04:38	04:38	04:38	04:39	04:39	04:39	04:39	04:39	04:40	04:40
140	04:40	04:40	04:40	04:41	04:41	04:41	04:41	04:41	04:42	04:42
141	04:42	04:42	04:42	04:43	04:43	04:43	04:43	04:43	04:44	04:44
142	04:44	04:44	04:44	04:45	04:45	04:45	04:45	04:45	04:46	04:46
143	04:46	04:46	04:46	04:47	04:47	04:47	04:47	04:47	04:48	04:48
144	04:48	04:48	04:48	04:49	04:49	04:49	04:49	04:49	04:50	04:50
145	04:50	04:50	04:50	04:51	04:51	04:51	04:51	04:51	04:52	04:52
146	04:52	04:52	04:52	04:53	04:53	04:53	04:53	04:53	04:54	04:54
147	04:54	04:54	04:54	04:55	04:55	04:55	04:55	04:55	04:56	04:56
148	04:56	04:56	04:56	04:57	04:57	04:57	04:57	04:57	04:58	04:58
149	04:58	04:58	04:58	04:59	04:59	04:59	04:59	04:59	05:00	05:00
150	05:00	05:00	05:00	05:01	05:01	05:01	05:01	05:01	05:02	05:02
151	05:02	05:02	05:02	05:03	05:03	05:03	05:03	05:03	05:04	05:04
152	05:04	05:04	05:04	05:05	05:05	05:05	05:05	05:05	05:06	05:06
153	05:06	05:06	05:06	05:07	05:07	05:07	05:07	05:07	05:08	05:08
154	05:08	05:08	05:08	05:09	05:09	05:09	05:09	05:09	05:10	05:10
155	05:10	05:10	05:10	05:11	05:11	05:11	05:11	05:11	05:12	05:12
156	05:12	05:12	05:12	05:13	05:13	05:13	05:13	05:13	05:14	05:14
157	05:14	05:14	05:14	05:15	05:15	05:15	05:15	05:15	05:16	05:16
158	05:16	05:16	05:16	05:17	05:17	05:17	05:17	05:17	05:18	05:18
159	05:18	05:18	05:18	05:19	05:19	05:19	05:19	05:19	05:20	05:20
160	05:20	05:20	05:20	05:21	05:21	05:21	05:21	05:21	05:22	05:22
161	05:22	05:22	05:22	05:23	05:23	05:23	05:23	05:23	05:24	05:24
162	05:24	05:24	05:24	05:25	05:25	05:25	05:25	05:25	05:26	05:26
163	05:26	05:26	05:26	05:27	05:27	05:27	05:27	05:27	05:28	05:28
164	05:28	05:28	05:28	05:29	05:29	05:29	05:29	05:29	05:30	05:30

165	05:30	05:30	05:30	05:31	05:31	05:31	05:31	05:31	05:32	05:32
166	05:32	05:32	05:32	05:33	05:33	05:33	05:33	05:33	05:34	05:34
167	05:34	05:34	05:34	05:35	05:35	05:35	05:35	05:35	05:36	05:36
168	05:36	05:36	05:36	05:37	05:37	05:37	05:37	05:37	05:38	05:38
169	05:38	05:38	05:38	05:39	05:39	05:39	05:39	05:39	05:40	05:40
170	05:40	05:40	05:40	05:41	05:41	05:41	05:41	05:41	05:42	05:42
171	05:42	05:42	05:42	05:43	05:43	05:43	05:43	05:43	05:44	05:44
172	05:44	05:44	05:44	05:45	05:45	05:45	05:45	05:45	05:46	05:46
173	05:46	05:46	05:46	05:47	05:47	05:47	05:47	05:47	05:48	05:48
174	05:48	05:48	05:48	05:49	05:49	05:49	05:49	05:49	05:50	05:50
175	05:50	05:50	05:50	05:51	05:51	05:51	05:51	05:51	05:52	05:52
176	05:52	05:52	05:52	05:53	05:53	05:53	05:53	05:53	05:54	05:54
177	05:54	05:54	05:54	05:55	05:55	05:55	05:55	05:55	05:56	05:56
178	05:56	05:56	05:56	05:57	05:57	05:57	05:57	05:57	05:58	05:58
179	05:58	05:58	05:58	05:59	05:59	05:59	05:59	05:59	06:00	06:00
180	06:00	06:00	06:00	06:01	06:01	06:01	06:01	06:01	06:02	06:02
181	06:02	06:02	06:02	06:03	06:03	06:03	06:03	06:03	06:04	06:04
182	06:04	06:04	06:04	06:05	06:05	06:05	06:05	06:05	06:06	06:06
183	06:06	06:06	06:06	06:07	06:07	06:07	06:07	06:07	06:08	06:08
184	06:08	06:08	06:08	06:09	06:09	06:09	06:09	06:09	06:10	06:10
185	06:10	06:10	06:10	06:11	06:11	06:11	06:11	06:11	06:12	06:12
186	06:12	06:12	06:12	06:13	06:13	06:13	06:13	06:13	06:14	06:14
187	06:14	06:14	06:14	06:15	06:15	06:15	06:15	06:15	06:16	06:16
188	06:16	06:16	06:16	06:17	06:17	06:17	06:17	06:17	06:18	06:18
189	06:18	06:18	06:18	06:19	06:19	06:19	06:19	06:19	06:20	06:20
190	06:20	06:20	06:20	06:21	06:21	06:21	06:21	06:21	06:22	06:22
191	06:22	06:22	06:22	06:23	06:23	06:23	06:23	06:23	06:24	06:24
192	06:24	06:24	06:24	06:25	06:25	06:25	06:25	06:25	06:26	06:26
193	06:26	06:26	06:26	06:27	06:27	06:27	06:27	06:27	06:28	06:28
194	06:28	06:28	06:28	06:29	06:29	06:29	06:29	06:29	06:30	06:30
195	06:30	06:30	06:30	06:31	06:31	06:31	06:31	06:31	06:32	06:32
196	06:32	06:32	06:32	06:33	06:33	06:33	06:33	06:33	06:34	06:34
197	06:34	06:34	06:34	06:35	06:35	06:35	06:35	06:35	06:36	06:36
198	06:36	06:36	06:36	06:37	06:37	06:37	06:37	06:37	06:38	06:38
199	06:38	06:38	06:38	06:39	06:39	06:39	06:39	06:39	06:40	06:40
200	06:40	06:40	06:40	06:41	06:41	06:41	06:41	06:41	06:42	06:42
201	06:42	06:42	06:42	06:43	06:43	06:43	06:43	06:43	06:44	06:44
202	06:44	06:44	06:44	06:45	06:45	06:45	06:45	06:45	06:46	06:46
203	06:46	06:46	06:46	06:47	06:47	06:47	06:47	06:47	06:48	06:48
204	06:48	06:48	06:48	06:49	06:49	06:49	06:49	06:49	06:50	06:50
205	06:50	06:50	06:50	06:51	06:51	06:51	06:51	06:51	06:52	06:52
206	06:52	06:52	06:52	06:53	06:53	06:53	06:53	06:53	06:54	06:54
207	06:54	06:54	06:54	06:55	06:55	06:55	06:55	06:55	06:56	06:56
208	06:56	06:56	06:56	06:57	06:57	06:57	06:57	06:57	06:58	06:58
209	06:58	06:58	06:58	06:59	06:59	06:59	06:59	06:59	07:00	07:00
210	07:00	07:00	07:00	07:01	07:01	07:01	07:01	07:01	07:02	07:02
211	07:02	07:02	07:02	07:03	07:03	07:03	07:03	07:03	07:04	07:04
212	07:04	07:04	07:04	07:05	07:05	07:05	07:05	07:05	07:06	07:06
213	07:06	07:06	07:06	07:07	07:07	07:07	07:07	07:07	07:08	07:08
214	07:08	07:08	07:08	07:09	07:09	07:09	07:09	07:09	07:10	07:10
215	07:10	07:10	07:10	07:11	07:11	07:11	07:11	07:11	07:12	07:12
216	07:12	07:12	07:12	07:13	07:13	07:13	07:13	07:13	07:14	07:14
217	07:14	07:14	07:14	07:15	07:15	07:15	07:15	07:15	07:16	07:16
218	07:16	07:16	07:16	07:17	07:17	07:17	07:17	07:17	07:18	07:18
219	07:18	07:18	07:18	07:19	07:19	07:19	07:19	07:19	07:20	07:20
220	07:20	07:20	07:20	07:21	07:21	07:21	07:21	07:21	07:22	07:22
221	07:22	07:22	07:22	07:23	07:23	07:23	07:23	07:23	07:24	07:24

222	07:24	07:24	07:24	07:25	07:25	07:25	07:25	07:25	07:26	07:26
223	07:26	07:26	07:26	07:27	07:27	07:27	07:27	07:27	07:28	07:28
224	07:28	07:28	07:28	07:29	07:29	07:29	07:29	07:29	07:30	07:30
225	07:30	07:30	07:30	07:31	07:31	07:31	07:31	07:31	07:32	07:32
226	07:32	07:32	07:32	07:33	07:33	07:33	07:33	07:33	07:34	07:34
227	07:34	07:34	07:34	07:35	07:35	07:35	07:35	07:35	07:36	07:36
228	07:36	07:36	07:36	07:37	07:37	07:37	07:37	07:37	07:38	07:38
229	07:38	07:38	07:38	07:39	07:39	07:39	07:39	07:39	07:40	07:40
230	07:40	07:40	07:40	07:41	07:41	07:41	07:41	07:41	07:42	07:42
231	07:42	07:42	07:42	07:43	07:43	07:43	07:43	07:43	07:44	07:44
232	07:44	07:44	07:44	07:45	07:45	07:45	07:45	07:45	07:46	07:46
233	07:46	07:46	07:46	07:47	07:47	07:47	07:47	07:47	07:48	07:48

INTERNATIONAL SKATING UNION

SPECIAL REGULATIONS & TECHNICAL RULES

SPEED SKATING

and

SHORT TRACK SPEED SKATING 2016

as accepted by the 56th Ordinary Congress
June 2016

In the ISU Constitution and Regulations, the masculine gender used in relation to any physical person (for example, Skater/Competitor, Official, member of an ISU Member etc. or pronouns such as he, they, them) shall, unless there is a specific provision to the contrary, be understood as including the feminine gender.

See also the ISU Constitution
and General Regulations

INTERNATIONAL SKATING UNION

Regulations laid down by the following Congresses:

1st	Scheveningen	1892	29th	Bergen	1961
2nd	Copenhagen	1895	30th	Helsinki	1963
3rd	Stockholm	1897	31st	Vienna	1965
4th	London	1899	32nd	Amsterdam	1967
5th	Berlin	1901	33rd	Maidenhead	1969
6th	Budapest	1903	34th	Venice	1971
7th	Copenhagen	1905	35th	Copenhagen	1973
8th	Stockholm	1907	36th	Munich	1975
9th	Amsterdam	1909	37th	Paris	1977
10th	Vienna	1911	38th	Davos	1980
11th	Budapest	1913	39th	Stavanger	1982
12th	Amsterdam	1921	40th	Colorado Springs	1984
13th	Copenhagen	1923	41st	Velden	1986
14th	Davos	1925	42nd	Davos	1988
15th	Luchon	1927	43rd	Christchurch	1990
16th	Oslo	1929	44th	Davos	1992
17th	Vienna	1931	45th	Boston	1994
18th	Prague	1933	46th	Davos	1996
19th	Stockholm	1935	47th	Stockholm	1998
20th	St. Moritz	1937	48th	Québec	2000
21st	Amsterdam	1939	49th	Kyoto	2002
22nd	Oslo	1947	50th	Scheveningen	2004
23rd	Paris	1949	51st	Budapest	2006
24th	Copenhagen	1951	52nd	Monaco	2008
25th	Stresa	1953	53rd	Barcelona	2010
26th	Lausanne	1955	54th	Kuala Lumpur	2012
27th	Salzburg	1957	55th	Dublin	2014
28th	Tours	1959	56th	Dubrovnik	2016

INDEX

I. SPECIAL REGULATIONS SPEED SKATING....11

A. Distances....11

Rule 200 Distances and team competitions....11

Rule 201 Distances and team competitions at ISU Championships....11

1. World Allround Championships....11
2. European Championships....11
3. World Sprint Championships....12
4. World Junior Championships....13
5. World Single Distances Championships....13

Rule 202 Distances at Olympic Winter Games....14

B. Tracks....15

Rule 203 Standard Tracks....15

Rule 204 Other Speed Skating tracks....15

Rule 205 Track at ISU Championships and ISU World Cup Competitions....15

Rule 206 Track at Olympic Winter Games....15

C. Organization of the Competitions....16

Rule 207 Entrance fees....16

Rule 208 Entries for ISU Championships and ISU Events....16

1. Entries only through ISU Members....16
2. Qualifying times....16
3. World Single Distances Championships....16
4. World Allround Championships....18
5. European Championships....19
6. World Sprint Championships....19
7. World Junior Championships....20
8. Deadlines for entries....20

Rule 209 Entries for Olympic Winter Games....21

1. Entry quotas....21
2. Qualification System....21

D. Officials and their duties....26

Rule 210 Officials necessary....26

Rule 211 Appointment of Officials....27

Rule 212 Nomination of Referees and Starters for ISU Championships and Olympic Winter Games 27

Rule 213 Nomination of Referees and Starters for International Competitions and National Championships....28

Rule 214 Appointment of Referees, Starters and other Officials for ISU Championships....28

Rule 215 Appointment of Officials for Olympic Winter Games....28

Rule 216 Duties and powers of the Referee....29

Rule 217 Duties and powers of the Starter....30

Rule 218 Duties of Track Judges....30

Rule 219 Duties of Lap Scorers....31

Rule 220 Duties of Finishing Line Judge 31
E. World Records **31**
Rule 221 31
1. World Record events 31
2. Conditions to be observed 32
3. Documents to be submitted and issued 33
F. World Cup **33**
Rule 222 Speed Skating World Cup 33
G. Equipment of Competitors **33**
Rule 223 33
1. Racing suits, safety equipment and team uniforms 33
2. Skates 34
3. Infringement of equipment rules 35
Rule 224-225 reserved 35

II. TECHNICAL RULES SPEED SKATING **36**
A. Track **37**
Track measurements and partitioning of the standard speed skating track 37
Example of standard speed skating tracks 38
Rule 226 Demarcation of the competition track 39
Rule 227 Layout of the track 39
1. Measurement 39
2. Starting and finishing lines 40
3. Coaches' area 40
Rule 228 Measures to protect safety of Skaters 40
1. Measures to avoid accidents 40
2. Protection measures – minimum requirements for all competitions 41
3. Protection measures at ISU Events and Olympic Winter Games 41
Rule 229 Ice preparation procedures at ISU Events and Olympic Winter Games 42
ISU Ice Commission 42
Information from the ice technical expert 42
B. Organization of the Competitions **43**
Rule 230 Announcement and conduct of ISU Championships 43
Rule 231 Communication during ISU Championships 43
Rule 232 Date and contents of Announcements, Supplementary conditions 43
Rule 233 Late announcements 43
Rule 234 Postponement of dates of Competition 43
Withdrawal of an announcement 43
Rule 235 Entries, Nicknames/Preferred names, Post Entries 43
Rule 236 Reserved 43
Rule 237 Validity of events 43
Rule 238 Expenses at ISU Championships, Reimbursement to Skaters and Officials 43
C. Drawing Procedures **44**
Rule 239 44
1. Public meeting for announcements and draws 44
2. Drawing at ISU Championships and other ISU Events 44
Rule 240 Drawing at World Allround Championships, European Championships and World Single Distances Championships 45
1. First draw at World Allround Championships 45
2. Further draw at World Allround Championships 45
3. Qualification for the fourth distance at World Allround Championships 45
4. Drawing at European Championships 46
5. Drawing at World Single Distances Championships 46
Rule 241 Drawing at Olympic Winter Games 47
Rule 242 Drawing at World Sprint Championships 49
Drawing at International Sprint Competitions 49
Rule 243 Drawing at World Junior Championships 50

Rule 244 Drawing at International Competitions 50
Events with one award of prizes, drawing and composition of pairs 50
Rule 245 Withdrawal from the start after draw. Entry of substitutes 51
Rule 246 Adjustment of starting order 52
D. Timekeeping 52
Rule 247 Automatic and manual timekeeping 52
Rule 248 Watches 52
Rule 249 Official times 53
Rule 250 Manual timekeeping procedure 53
Rule 251 Automatic timekeeping procedure 54
Rule 252 Split times and times for individual laps 55
E. Racing Rules 56
Rule 253 56
1. Counter-clockwise skating 56
2. Skating in separate racing lanes 56
3. Changing lanes 56
4. Competitions and distances with special rules 56
Rule 254 Call to the start 58
Rule 255 58
1. Starting equipment 58
2. Starting procedure 58
3. False start 59
Rule 256 60
1. Keeping within the designated competition lane 60
2. Cutting the inner line in the curve 60
3. Crossing the lines of the designated competition lane 60
4. Exceptional situations 60
Rule 257 60
1. Responsibility in cases of collision 60
2. Responsibility when overtaking 61
3. Disqualifications 61
Rule 258 Distance between Competitors after overtaking 61
Rule 259 Pace-making 61
Rule 260 Finishing line 62
Rule 261 Racing rules for team competitions 62
1. Team Pursuit races 62
2. Relay races 63
3. Team Sprint races 63
4. Disqualification and fresh starts in team competitions 64
Rule 262 Allowance of fresh start 64
Required rest time 64
Starting lanes for fresh starts 65

Rule 263 Doping 65
F. Results of the Competition **65**
Rule 264 Announcement of results 65
Rule 265 Results of events 65
1. Results of events over single distances 65
2. Results of events over several distances 66
3. Calculation of points 66
4. Final classification in competitions over several distances 66
5. Results of Team Pursuit events 66
6. Results of Mass start races 67
7. Results of Team Sprint races 67
Rule 266 Participation in all distances 67
Rule 267 Titles 68
Rule 268 Winners 68
Rule 269 Medals 68
Rule 270 Prizes 69
Rule 271 Awarding of medals 69
Rule 272 Results of Championships 69
Rule 273 Official protocol 69
G. Protests and Disqualifications **70**
Rule 274 Protests 70
Rule 275 Disqualification 70
Rule 276 Appeals 70
Rule 277 Exclusion of Competitors, etc 70
H. Quartet Starts **70**
Rule 278 70
1. Competition format 70
2. Starting procedures and composition of quartets 71
I. Equipment of Competitors **72**
Rule 279 72
1. Communication equipment 72
2. Musical equipment 72
3. Devices to enable timekeeping 72
4. Armband or other means of identification 72
5. Infringement of equipment rules 72

III.SPECIAL REGULATONS SHORT TRACK SPEED SKATING **74**
A. Tracks **74**
Rule 280 74
Track 74
Track markers 75
Rink Board padding 75
Facilities at rink 75
B. World Championships **75**
Rule 281 75
Distances and program 75
Entries 77
Drawing and seeding procedure 78
Conditions of contest 78
Winner(s) 78
Rule 282 Reserved 78
C. World Junior Championships **79**
Rule 283 79
Distances and Program 79
Entries 80
Drawing and seeding procedure 81
Conditions of contest 81
Winner 81
D. Olympic Winter Games **81**
Rule 284 81
Distances 81
Entry quotas 82
Qualification system 82
Process of confirmation of places 84
Reallocation of unused quota positions 84
Qualifying Timeline 84
Medal assignments at Olympic Winter Games 84
E. European Championships **85**
Rule 285 85
Distances and program 85
Entries 87
Drawing and seeding procedure 88
Conditions of contest 88
Winner(s) 88
F. World Cup Competitions **89**
Rule 286 89
Conditions of contest 89

G. Competitions **92**
Rule 287 92
Competitions 92
H. Officials and their duties **93**
Rule 288 93
Representative of the Technical Committee 93
Rule 289 94
Nomination and Appointment of Officials 94
Nomination of Officials 94
Appointment of Officials 96
Rule 290 96
Officials necessary 96
Medical 97
Referee 97
Assistant Referee 98
Assistant Referee Video 98
Starter 99
Competitors Steward 99
Heat Box Steward 99
Photo Finish Judge 99
Chief Finish Line Judge and Finish Line Judges 100
Chief Timekeeper and Timekeepers 100
Lap scorer 101
Lap Recorder 101
Announcer 101
Track Stewards 101
On-ice Officials 101
Rule 291 102
Equipment of Skaters 102
Rule 292 103
World Records 103
Rule 293 Reserved 103

IV. TECHNICAL RULES SHORT TRACK SPEED SKATING 104
A. Races 104
Rule 294 104
Type of races 104
B. Definitions 104
Rule 295 104
General conditions/Definitions 104
Program 104
Announcement 106
Entries 106
Points and classifications 107
Uniforms 109
Helmet Covers 109
Rule 296 109
Drawing and seeding procedures 109
C. Racing Rules 111
Rule 297 111
Individual racing rules 111
Infringements 112
Relay racing rules 112
Relay infringements 113
Sanctions for infringements of the Racing Rules or the ISU Code of Ethics 113
Sanctions for Coaches, Team leaders and Support staff 115
Rule 298 115
Heat Box 115
Starting equipment 116
Lane Positions 116
Starting procedure 116
End of Race 119
Rule 299 Reserved. 119

I. SPECIAL REGULATIONS SPEED SKATING

A. Distances

Rule 200 Distances and team competitions

1. International Competitions may include races over the following distances: 100, 500, 1000, 1500m (called short distances), 3000, 5000, 10000m (called long distances) and either over each of these distances with an award of prizes for each distance, or over several distances with one prize.
2. In addition to the distances prescribed in paragraph 1, International Competitions may also include races held over other shorter and longer distances, including pursuit races and mass start races (see also Rule 253, paragraph 4). Team competitions may be held as team pursuit races, team sprint races, relay races, etc. (see also Rule 261). Such races do not need to be held on the ordinary tracks (see also Rule 204). Specific rules must be announced by the organizer, and should refer to relevant regulations or guidelines issued or endorsed by the ISU.
3. New methods may be tried out in International Competitions (with the exception of ISU Championships) provided the following directions are observed:

   a) An application must be sent in advance to the ISU Speed Skating Technical Committee, and the approval of the Committee must be obtained;

   b) In the announcement of the competition information must be given as to the kind of method to be tried out;

   c) Not later than two weeks after the competition the Organizing ISU Member must submit a report on the new method to the ISU Speed Skating Technical Committee.
4. Modifications of a technical nature with respect to the Special Regulations and Technical Rules of Speed Skating may be implemented by the ISU Speed Skating Technical Committee on a trial basis in International Competitions. ISU Members shall be notified of such modifications through an ISU Communication or Circular Letter.

Rule 201 Distances and team competitions at ISU Championships

1. World Allround Championships

The distances for the World Allround Championships are for Ladies 500, 3000, 1500 and 5000m and for Men 500, 5000, 1500 and 10000m. For Ladies 500 and 3000m are skated on the same day, 1500 and 5000m on the next day. For Men 500 and 5000m are skated on the same day, 1500 and 10000m on the next day.

2. European Championships

The European Championships are organized annually over three days with two alternating programs. In the seasons before and after the seasons of Olympic Winter

Games the European Championships will be held with competitions in Allround and Sprint combination events. In the other seasons the European Championships will be held with competitions in single distance events and team events.

a) Championships format: Allround and Sprint Combination events.
   i) The distances for the Allround Combination are for Ladies 500, 3000, 1500 and 5000m, and for Men 500, 5000, 1500 and 10000m.
   ii) The distances for the Sprint Combination are for Ladies and Men 500 and 1000m. Both for Ladies and for Men both distances are skated twice, and both distances shall be skated during the same day.
   iii) The daily program shall be as follows:
      - Day 1:
        - 500 and 3000m Allround Ladies
        - first 500 and 1000m Sprint Men
      - Day 2:
        - 1500 and 5000m Allround Ladies,
        - first 500 and 1000m Sprint Ladies
        - second 500 and 1000m Sprint Men
        - 500 and 5000m Allround Men
      - Day 3:
        - second 500 and 1000m Sprint Ladies
        - 1500 and 10000m Allround Men.

b) Championships format: Single Distance events and team events.
   i) Individual events for Ladies: 500m, 1000m, 1500m, 3000m, Mass start
   ii) Individual events for Men: 500m, 1000m, 1500m, 5000m, Mass start
   iii) Team events for Ladies with national teams of 3 Skaters each:
      - Team Pursuit race over 6 laps
      - Team Sprint race over 3 laps.
   iv) Team events for Men with national teams of 3 Skaters each:
      - Team Pursuit race over 8 laps
      - Team Sprint race over 3 laps.
   v) The daily program will be as follows:
      - Day 1: 500 and 1500m, Ladies and Men
      - Day 2: 1000m Ladies and Men, 3000m Ladies, 5000m Men
      - Day 3: Team Pursuit, Team Sprint and Mass Start, Ladies and Men

c) The order of races for each day will be decided by the ISU Sports Director in consultation with the organizer and the ISU Speed Skating Technical Committee.

3. World Sprint Championships

The distances for the World Sprint Championships are for Ladies and Men 500 and 1000 m. Both for Ladies and for Men both distances are skated twice, and on two consecutive days for each gender. On each day the 500m is skated before the 1000m.

4. World Junior Championships

The events at the World Junior Championships are:

a) allround combination for Ladies over 4 distances: 500, 1000, 1500 and 3000m;
b) allround combination for Men over 4 distances: 500, 1000, 1500, and 5000m;
c) single distance events for Ladies: 500, 1000, 1500 and 3000m, and Mass start race over 10 laps;
d) single distance events for Men: 500, 1000, 1500, and 5000m, and Mass start race over 10 laps
e) team events for Ladies: Team Pursuit race over 6 laps for national teams consisting of three Skaters, and Team Sprint race over 3 laps for national teams consisting of three Skaters;
f) team events for Men: Team Pursuit race over 8 laps for national teams consisting of three Skaters, and Team Sprint race over 3 laps for national teams consisting of three Skaters;

The World Junior Championships are organized over three days. The events will be run according to the following program:

Day	Program
1	Ladies: 500m, 1500m Men: 500m, 1500m
2	Ladies: 1000m, 3000m, Team Sprint Men: 1000m, 5000m, Team Sprint
3	Ladies: Team Pursuit (6 laps), Mass start (10 laps) Men: Team Pursuit (8 laps), Mass start (10 laps)

Quartet starts should be used over the distances 3000m (Ladies) and 5000m (Men).
The Mass Start races will be organized with one intermediate sprint in the middle of the race, where Competitors gain points counting towards the final ranking. Further details are provided in the Technical Rules 243, 253 and 265. The Team Sprint events will be organized in accordance with Technical Rule 261, paragraph 3, with two teams racing at the same time.

5. World Single Distances Championships

The events at the World Single Distances Championships are:

a) single distance competitions for Ladies: 500m, 1000m, 1500m, 3000m and 5000m, and Mass start race over 16 laps;
b) single distance competitions for Men: 500m, 1000m, 1500m, 5000m, and 10000m, and Mass start race over 16 laps;
c) team competitions for Ladies: Team Pursuit race over 6 laps, and (from season 2018-19) Team Sprint race over 3 laps, for national teams consisting of three Skaters,

d) team competitions for Men: Team Pursuit race over 8 laps , and (from season 2018-19) Team Sprint race over 3 laps, for national teams consisting of three Skaters.

The World Single Distances Championships are organized over four days. The events will be run according to the following program:

Day	Program
1	Ladies: 3000m, Team Sprint (from 2019) Men: 5000m, Team Sprint (from 2019)
2	Ladies: 500m, Team Pursuit Men: 500m, Team Pursuit
3	Ladies: 1000m, 5000 m Men: 1000m, 10000m
4	Ladies: 1500m, Mass start Men: 1500m, Mass start

The order of the distances for each day will be decided by the ISU Sports Director in consultation with the organizer and the ISU Speed Skating Technical Committee.

Rule 202 Distances at Olympic Winter Games

1. The Speed Skating events at the Olympic Winter Games are:

a) single distance events for Ladies: 500, 1000, 1500, 3000 and 5000m, and Mass start race over 16 laps;

b) single distance events for Men: 500, 1000, 1500, 5000, and 10000m, and Mass start race over 16 laps;

c) team event for Ladies: Team Pursuit race over 6 laps for national teams consisting of three Skaters;

d) team event for Men: Team Pursuit race over 8 laps for national teams consisting of three Skaters.

2. The program of the Speed Skating races at the Olympic Winter Games shall be drawn up by the ISU Member concerned. The program must be approved by the Council of the ISU in consultation with the IOC and the Organizing Committee of the Olympic Winter Games.

B. Tracks

Rule 203 Standard Tracks

1. A Standard Speed Skating Track is an open, covered or enclosed ice rink with a double-laned competition track, maximum 400 meters, minimum 333 1/3 meters long, with two curved ends each of 180º, in which the radius of the inner curve should not measure less than 25 meters and not more than 26 meters.

2. The crossing area shall be the whole length of the straight from the end of the curve.

3. The width of the inner competition lane shall be 4 meters. The width of the outer competition lane must be at least 4 m.

Rule 204 Other Speed Skating tracks

Speed Skating tracks which do not comply with the form or length of the standard track shall be arranged as a double-laned competition track at least 200 meters long, with an inner radius of at least 15 meters, and a crossing area of length not less than 40 meters and competition lane widths of at least 2 meters. For competitions not following the general racing rules (see Rule 200, paragraphs 2 and 3) the track may be arranged without separate competition lanes, for example on lakes, rivers, etc.

Rule 205 Track at ISU Championships and ISU World Cup Competitions

The ISU Championships and ISU World Cup Competitions must be run on a 400 meters standard Speed Skating track. Inside the competition lanes the track should have a warm-up lane with a width of minimum 4 m.

Rule 206 Track at Olympic Winter Games

The Speed Skating Competitions of the Olympic Winter Games must be skated on a standard ISU 400 meters Speed Skating track on artificially frozen ice. The track must be laid out in accordance with ISU Regulations, and must have a warming-up lane of minimum width 4 meters inside the competition lanes. The ice rink must be enclosed within a heated building to be protected from wind and weather. The area inside the competition track (infield) must be accessible without crossing the surface of the ice. A reasonable number of spectator seats must be provided, together with proper facilities for Competitors, Officials, guests, television and other media.

C. Organization of the Competitions

Rule 207 Entrance fees

There are no entrance fees for ISU Championships.

Rule 208 Entries for ISU Championships and ISU Events

1. Entries only through ISU Members

Entries for ISU Championships and ISU Events can be made only through the respective ISU Members (for exceptions see Rule 109, paragraph 5).

2. Qualifying times

Minimum qualifying times are required for entry in all ISU Speed Skating Championships. The required qualifying times for the respective Championships, the qualifying period, the category of competitions and other conditions under which the times must have been achieved, are decided by the ISU Speed Skating Technical Committee and will be announced in an ISU Communication. The ISU Members are responsible to submit verification of the best qualifying time achieved by each Competitor entered for ISU Championships. If sufficient verification is missing, the entry will not be accepted.

3. World Single Distances Championships

a) Entry quotas for the World Single Distances Championships will be allocated to ISU Members according to a Special Qualification Ranking List (SQRL) for each event based on results achieved in designated Speed Skating World Cup Competitions during the season. The actual World Cup Competitions counting for the SQRL will be announced in an ISU Communication before September 1st preceding the Championships. This Communication will also announce required qualifying times for Competitors to be entered for the respective events.

The maximum entry quota for an ISU Member is 3 Competitors for the individual events, except for the 5000m Ladies, 10 000m Men, Mass start Ladies and Mass start Men. For these events the maximum entry quota is 2 Competitors. For the Team Pursuit event one quota place is allocated to ISU Members qualified according to the SQRL.

b) The total number of competitors in the events will be limited as follows:

500m Ladies and Men:	24
1000m Ladies and Men:	24
1500m Ladies and Men:	24
3000m Ladies and 5000m Men:	20
5000m Ladies and 10 000m Men:	12
Mass start Ladies and Men	24
Team Pursuit Ladies and Men	8 teams

c) Definition of Special Qualification Ranking List (SQRL):

i) Each SQRL will be a combination of two sets of rankings:

– a ranking according to the World Cup points earned on the occasion of the designated World Cup Competitions (“SQRL points ranking”).
For Ladies' 3000m and 5000m and for Men's 5000m and 10 000m the SQRL points ranking for each distance will be based on World Cup points for both distances, counted together;

– a ranking based on the best times per Skater achieved on the occasion of the designated World Cup Competitions (“SQRL times ranking”) on the actual distance;

ii) In case of a tie in either of the two ranking lists the Skater with the better rank in the other list will get the higher rank in the SQRL. However, ties in the SQRL points ranking shall first be resolved by the ISU World Cup ranking rules, if possible;

iii) For each event the highest ranked SQRL positions will consist of a certain number of Skaters (for each ISU Member counting only Skaters inside the maximum quota for the event concerned) or Teams from the SQRL points ranking, as follows:

- for 500, 1000 and 1500m (Ladies and Men) 14
- for 3000m Ladies, 5000m Men 12
- for 5000m Ladies and 10 000m Men 6
- for Mass start Ladies and Men 24
- for Team Pursuit Ladies and Men 6

iv) The remaining part of the SQRL will be based on SQRL times ranking;

v) The SQRL ranking positions beyond the total number of quota places for an event will be referred to as "SQRL reserve positions".

d) Allocation of quota places to ISU Members. Reallocation of quota places:

i) The allocation of quota places to ISU Members for each event will be announced by the ISU shortly after the last of the designated Speed Skating World Cup Competitions counting for the SQRL;

ii) Quota places will be allocated according to the SQRL, with the exception that the hosting ISU Member will be allocated one quota place per event also in the case that their best ranked Skater will only be ranked among the 6 first SQRL reserve positions. For the Team Pursuit events the hosting ISU Member will be allocated a quota place also in the case that their team will only be ranked among the 3 first SQRL reserve positions;

iii) If some ISU Member(s) will not enter Competitors according to their allocated quota places, these quota places will be reallocated to other ISU Members according to the SQRL ranking, but with priority for ISU Members that would not yet have been allocated a quota place for the event. The reallocation procedure will be limited to six (6) SQRL reserve positions for the individual events and to three (3) SQRL reserve positions for the team events. ISU Members that do not intend to make

use of all their allocated quota places are obliged to inform the ISU Secretariat as soon as possible.

e) Use of allocated quota places (entries for each event):
Following the allocation of quota places the entries of Competitors, including maximum one substitute per event, are at the discretion of the respective ISU Member. However, all entered Competitors must have achieved the Qualifying Times set by the ISU for the respective events (see paragraph 2 above).

4. World Allround Championships

a) The number of Competitors in the World Allround Championships is 24 Ladies and 24 Men. The maximum number of Competitors from one ISU Member is three (3) per gender;

b) The entry quotas for the ISU Members in the World Allround Championships are determined partly by results from the preceding Championships, and partly by results in a special qualifying event held on the occasion of a World Cup Competition during the same season. The allocation of entry quotas will be made as follows:

i) ISU Members will be pre-allocated quota places (but maximum 2 quota places) according to their number of Skaters placed among the 12 best in the preceding Championships. The hosting ISU Member will be pre-allocated a quota place also in the case that the ISU Member had no Skater placed among the 12 best in the preceding Championship;

ii) Remaining quota places are allocated to ISU Members based on a Special Qualification Ranking List (SQRL) formed by the combined results (total points in accordance with Rule 265, paragraph 3) of Skaters competing in both 1500m and 3000m (for Ladies) and 1500m and 5000m (for Men) in the World Cup Competition designated as a qualifying event. For ISU Members that have been pre-allocated quota places based on results from the preceding Championships, their best ranked Skaters from the SQRL corresponding to the number of these pre-allocated quota places, will be disregarded for the further allocation of quota places;

iii) When 24 quota places thus have been allocated, a numbered reserve list of quota places is defined based on the SQRL. This reserve list will be applied to reallocate quota places in the case that some ISU Members will not use all their achieved quota places. In the reallocation process priority will be given to ISU Members that have not yet been allocated a quota place.

c) Within its allocated entry quota for the World Allround Championships an ISU Member may enter Competitors, and a maximum of one substitute, among Skaters who have achieved the required qualifying times (see paragraph 2 above).

d) Detailed regulations for the special qualifying event and the SQRL will be issued in an annual ISU Communication published before September 1.

5. European Championships

a) The maximum number of Competitors in the single distance events and team events of the European Championships are the same as the maximum number of Competitors for the same events in the World Single Distances Championships, see Rule 208, paragraphs 3b). For the Allround Championships and the Sprint Championship the maximum number of participants in each of the Championships events is 24 Men and 20 Ladies.

b) The maximum number of Competitors from one ISU Member in each event of the European Championships is the same as the maximum number of Competitors for the same events in World Championships, see Rule 208, paragraphs 3a), 4a) and 6a).

c) Entry quotas for each event will be allocated to European ISU Members according to a qualification system with the same structure as the system applied for the corresponding events in World Championships, see Rule 208, paragraphs 3, 4 and 6. Further details, including information on the designated qualifying competitions and qualifying times, will be announced in an annual ISU Communication. For the first edition of the European Sprint Championships event pre-allocation of quota places will be based on the top 20 results from the preceding World Sprint Championships.

d) When the Championships are organized in the format with single distances and team events program, the maximum number of entries for an ISU Member will be 10 Skaters per gender in total.

e) Each ISU Member may enter a maximum of one (1) substitute for each event.

6. World Sprint Championships

6. a) The number of Competitors in the World Sprint Championships is limited to 28 Ladies and 28 Men. The maximum number of Competitors from one ISU Member is three (3) per gender;

b) The entry quotas for the ISU Members in the World Sprint Championships are determined partly by results from the preceding Championships, and partly by results in a special qualifying event held on the occasion of a World Cup Competition during the same season. The allocation of entry quotas will be made as follows:

i) ISU Members will be pre-allocated quota places (but maximum 2 quota places) according to their number of Skaters placed among the 16 best in the preceding Championships. The hosting ISU Member will be pre-allocated a quota place also in the case that the ISU Member had no Skater placed among the 16 best in the preceding Championship;

ii) Remaining quota places are allocated to ISU Members based on a Special Qualification Ranking List (SQRL) formed by the combined results (total points in accordance with Rule 265, paragraph 3) of Skaters competing in both 500m and 1000m in the World Cup Competition designated as a qualifying event. For ISU Members that have been pre-allocated quota places based on results from the preceding Championships, their best ranked Skaters from the SQRL corresponding

to the number of these pre-allocated quota places, will be disregarded for the further allocation of quota places;

iii) When 28 quota places thus have been allocated, a numbered reserve list of quota places is defined based on the SQRL. This reserve list will be applied to reallocate quota places in the case that some ISU Members will not use all their achieved quota places. In the reallocation process, priority will be given to ISU Members that have not yet been allocated a quota place.

c) Within its allocated entry quota for the World Sprint Championships an ISU Member may enter Competitors, and a maximum of one substitute, among Skaters who have achieved the required qualifying times (see paragraph 2 above).

d) Detailed regulations for the special qualifying event and the SQRL will be issued in an annual ISU Communication published before September 1.

7. World Junior Championships

In the World Junior Championships each ISU Member may enter a total of maximum 5 Ladies and 5 Men. For the 500m event a maximum of 5 Competitors may be entered, and for the Mass start event a maximum of 2 Competitors may be entered. For all other individual events, the Team Pursuit and the Team Sprint events a maximum of 4 Competitors may be entered. Competitors entered for all the four individual distances, are eligible to compete in the Allround event. For each event substitutes can be named among the maximum 5 Competitors entered for the Championships.

8. Deadlines for entries

The preliminary entry with the number of coaches and other team staff, the number of Competitors and substitutes, as well as provisional names of the Competitors and the Team leader must be submitted 18 days before the first day of the Championship (i.e. the day of the first event, Ladies or Men). The ISU Members are requested to include in their preliminary entries only the number of coaches and other team staff, and the number and provisional names of Competitors and substitutes, that they actually intend to send to the Championships concerned. For Championships where ISU has issued a reserve list of entry quotas or qualified Skaters, ISU Members concerned must confirm as soon as possible (and well before the deadline for final entries) to the ISU Secretariat whether they will make use of their full entry quotas, and if Skaters in reserve position will be available to compete in case of withdrawals.

The final entry shall include the names of the Competitors and available substitutes, as well as the names of the Team leader, Coaches and other team staff for whom the ISU Member is requesting accreditation for the Championships. The amount of available accreditations for team staff will be restricted according to guidelines issued by ISU. The final entry must be communicated to the organizing committee not later than 12:00 (noon) local time (at the site of the Championships), three (3) days before the first day of the Championships. For post entries Rule 115, paragraph 6, of the General Regulations applies.

Rule 209 Entries for Olympic Winter Games

1. Entry quotas

For each edition of the Olympic Winter Games, the International Olympic Committee (IOC) stipulates an overall maximum number of Competitors to be entered into Speed Skating events (IOC Quota), with a target number for each gender. If for either Ladies or Men the respective IOC Quota target number would not be reached according to the qualifying system described in the ISU Regulations, the respective unused number of quota places would be credited and added to the quota of the other gender.

a) The total overall number of entered Speed Skaters per ISU Member, respectively National Olympic Committee (NOC), will be maximum 20 Competitors; maximum 10 Ladies and maximum 10 Men. The overall quota for an ISU Member/NOC will be further restricted, depending on the allocated ISU Member/NOC event quota places, as follows:

- Maximum 10 for Ladies and 10 for Men for ISU Members/NOCs that have been allocated quota places for all events/distances, including the Team Pursuit and Mass start events.
- Maximum 8 for Ladies and 8 for Men for other ISU Members/NOCs.
- The total number of entered Competitors (for Ladies and Men, respectively) cannot exceed the total number of allocated quota places in the individual events/distances for the ISU Member/NOC concerned.

b) The maximum number of participating Competitors per ISU Member/NOC per event/distance may not exceed:

- three (3) in each of the individual events/distances 500m, 1000m, 1500m (Ladies and Men), 3000m (Ladies) and 5000m (Men);
- two (2) in each of the individual events/distances 5000m (Ladies), 10000m (Men) and in the Mass start (Ladies and Men);
- four (4) in each of the Team Pursuit events. The maximum of one team per ISU Member/NOC may be entered in each event (Ladies and Men).

c) The maximum number of Competitors per event/distance (event/distance quota) will be:

- 500m, 1000m and 1500m for Ladies: 32
- 500m, 1000m and 1500m for Men: 36
- 3000m for Ladies and 5000m for Men: 24
- 5000m for Ladies and 10000m for Men: 12
- Mass start for Ladies and Men: 24
- Team Pursuit events: 8 teams, each team consisting of maximum 4 Skaters.

2. Qualification System

a) The qualification system is based on three key elements:

i) Allocation of ISU Member/NOC event quotas (qualification places for each event) according to Special Olympic Qualification Classifications (SOQCs) based on results from designated ISU World Cup

Competitions. These qualification places are earned by the ISU Members, respectively National Olympic Committees (NOCs), based on the Special Olympic Qualification Classifications (SOQC) per event/distance resulting from the ISU World Cup Speed Skating Competitions designated by the ISU to be held during the Olympic Winter Games' season. There will be SOQCs for Team Pursuit Ladies and Men, and for each of the individual events;

ii) Achievement of Qualifying Times: To be eligible to be entered for the Olympic Winter Games within the qualification places earned by the respective ISU Member/NOC, Skaters must have achieved ISU Qualifying Times during a period between July 1 the year preceding the Olympic Winter Games and the deadline for entry for the Olympic Winter Games. The applicable qualifying time standards and conditions for approval of achieved qualifying times will be announced in an ISU Communication not later than July 1 the year preceding the Olympic Winter Games;

iii) Use of allocated quota places (entries by name for each event/distance): Upon confirmation by the ISU of the quota places earned by the ISU Members/NOCs, the subsequent entries by name to the Olympic Winter Games (to be made within the applicable deadlines) are at the discretion of the respective ISU Member/NOC. All entries are subject to the entered Competitors being eligible according to ISU and IOC rules as well as having reached the Qualifying Times set by the ISU for the respective events/distances.

b) Definition of Special Olympic Qualification Classification (SOQC)

i) SOQCs will be calculated according to criteria based on the ISU rules for the ISU Speed Skating World Cup classification and the ISU rules for qualification for the ISU World Single Distances Championships as published in the ISU Regulations and dedicated ISU Communications. Each SOQC will be combined of two sets of rankings:

- a ranking according to the World Cup points earned on the occasion of the designated World Cup Competitions ("SOQC points ranking");
- a ranking based on the best times per Skater achieved on the occasion of the designated World Cup Competitions ("SOQC times ranking");

ii) In case of a tie in either of the two ranking lists the Skater with the better rank in the other list will get the higher rank in the SOQC. However, ties in the SOQC points ranking should first be resolved by the ISU World Cup ranking rules, if possible;

iii) For each event/distance the highest ranked SOQC positions will consist of a certain number of Skaters/teams (for each ISU Member/NOC, counting only Skaters inside the maximum ISU Member/NOC quota for

the event/distance concerned) from the SOQC points ranking as follows for each event/distance:

- for 500m, 1000m and 1500m (Ladies and Men) 20
- for 3000m Ladies, 5000m Men 16
- for 5000m Ladies and 10000m Men 8
- for Mass start Ladies and Men 24
- for Team Pursuit Ladies and Men 6

iv) The remaining part of the SOQC will be based on the SOQC times ranking;

v) For the long distances (3000m and 5000m for Ladies, 5000m and 10000m for Men) the SOQC points ranking will be based on the total of World Cup points achieved for both of the two distances, in accordance with ISU World Cup rules. The SOQC times ranking will be based on times achieved in the distance concerned only.

c) Allocation of quota places to ISU Members/NOCs:

The ISU Member/NOC quota places for each event/distance will be allocated according to the Special Olympic Qualification Classification (SOQC) for the event/distance, based on results from designated ISU World Cup Competitions.

The event/distance quotas are:

- for 500m, 1000m and 1500m: 32 Ladies and 36 Men, out of which maximum 3 per event/distance per ISU Member/NOC;
- for 3000m Ladies and 5000m Men: 24 each, out of which maximum 3 per event/distance per ISU Member/NOC;
- for 5000m Ladies and 10000m Men: 12 each, out of which maximum 2 per event/distance per ISU Member/NOC;
- for Mass start Ladies and Men: 24 each, out of which maximum 2 per event/distance per ISU Member/NOC;
- for Team Pursuit: 8 Ladies' team and 8 Men's team, out of which maximum 1 Ladies' team and 1 Men's team per ISU Member/NOC, with each team consisting of maximum 4 Skaters.

For each event, quota places for each ISU Member/NOC will be allocated according to the position of Skaters or team from the ISU Member/NOC concerned in the SOQC for the event, respecting the following conditions and exceptions:

i) When an ISU Member/NOC has been allocated the maximum allowed ISU Member/NOC event quota (3 for 500m, 1000m, 1500m and 3000m for Ladies, 3 for 500m, 1000m, 1500m and 5000m for Men; and 2 for 5000m for Ladies, 10000m for Men, Mass start Ladies & Men), additional Skaters from this ISU Member/NOC will not be considered in the further allocation of quota places;

ii) For Team Pursuit (quota of 8 teams, 1 team per ISU Member/NOC): The Host ISU Member/NOC of the Olympic Winter Games has the right to enter a team for each of the Team Pursuit events;

iii) If there would be a tie in the SOQC determining the last quota place for an event/distance, this position will be decided by a random draw done by the

ISU Director General, at the ISU Secretariat, in presence of an independent auditor;

iv) When the maximum total quota places for an event/distance (as specified above) has been reached, the next SOQC positions per event/distance will constitute a reserve list of quota places. For the individual events/distances the reserve list consists of 6 reserve quota places. For the Team Pursuit events the reserve list consists of 3 reserve quota places.

d) Reallocation of quota places:

When some ISU Members/NOCs will reject the use of allocated quota places, unused quota places will be reallocated on the condition that the IOC quota for Speed Skating will not be exceeded. The reallocation will be done according to the ranking order in the SOQC reserve list, but with the exception that priority shall be given to ISU Members/NOCs that have not already been allocated a quota place for the event/distance concerned.

e) Use of allocated quota places (entries by name for each event/distance):

Upon confirmation by the ISU of the quota places earned by the ISU Members/NOCs per event and in total, the subsequent "entries by name" to the Olympic Winter Games to be made within the applicable deadlines, are at the discretion of the respective ISU Member/NOC. All entries are subject to the entered Competitors being eligible according to ISU and IOC rules, as well as Competitors having achieved the Qualifying Times set by the ISU for the respective events/distances.

The "entries by name" to be submitted before the deadline for entries of Competitors for the Olympic Winter Games, must indicate in which event(s) each Competitor is considered for participation. For each event/distance, the number of Competitors indicated can be maximum one more than the allocated ISU Member/NOC quota for the event/distance. When on site of the Olympic Winter Games, the final entries for each individual event/distance shall be made (deadline: 3 days prior to the event), the ISU Member/NOC can only enter Competitors according to these indications in the "entries by name". For the Team Pursuit events the ISU Members/NOCs may select their team (consisting of 3 or 4 Skaters) at their discretion among Skaters who have been entered for the Olympic Winter Games, but it is expected that all members of the team have been entered for the Olympic Winter Games with the intention also to fill an allocated quota place for at least one individual event/distance.

f) Host ISU Member/NOC qualification

The host ISU Member/NOC will be subject to the same qualification procedure and rules for the allocation of quota places as other ISU Members/NOCs, except for the Team Pursuit events where the host ISU Member/NOC will have the right to enter a team, only subject to the general conditions for entry of Skaters and teams.

g) Qualifying Times

Only Skaters having achieved the ISU Qualifying Times, in accordance with specifications as announced by the ISU not later than by July 1 in the year preceding the Olympic Winter Games, may be entered as Competitors for the Olympic Winter Games. To be entered for an individual event/distance, a Skater must have achieved the Qualifying Time for the event/distance concerned. To be entered for the Team

Pursuit event, a Skater must have reached the Qualifying Time for at least one of the individual events/distances.

h) Conditions for recognition of achieved Qualifying Times

The period permitting Skaters to achieve Qualifying Times shall be announced in an ISU Communication. Only the following competitions will be considered for achievement of Qualifying Times:

- ISU Championships;
- ISU World Cup Speed Skating Competitions (to be announced in an ISU Communication no later than August 1 prior to the Olympic Winter Games);
- International Competitions open to all ISU Members, announced according to ISU Regulations, Rule 110;
- Country matches announced according to ISU Regulations, Rule 110;
- National Championships organized by the ISU Members, including competitions officially declared by the ISU Member concerned as National Olympic Trials.

For Country matches and National Championships/National Olympic Trials to be considered for achievement of Qualifying Times, the organizing ISU Member must announce to the ISU Secretariat by October 1 (see Rule 104, paragraph 14 c) the program as well as the planned date and place for such competitions. A copy of the announcement for the competition must be sent to the ISU Secretariat not later than two weeks before the first competition day.

Moreover, ISU Regulations must be respected and in particular, but not limited to, the following conditions must be met in order for competitions to be recognized for achievement of Qualifying Times:

- Automatic timekeeping equipment must have been used at the Competition;
- The Referees and Starters at the competition must be included in the lists of ISU recognized Speed Skating Referees and Starters for the season concerned, as published in the annual ISU Communication, or any amendments to this Communication;
- Anti-Doping tests in accordance with the valid ISU Anti-Doping Rules <u>and ISU Anti-Doping Procedures</u> must be organized at the competition.

i) Verification and approval of achieved Qualifying Times

The ISU Speed Skating Technical Committee is responsible for the approval of achieved Qualifying Times.

The ISU Members are responsible for submitting to the ISU verification of the best achieved Qualifying Time per event/distance for each Skater intended for participation in the Olympic Winter Games. The verification shall include the date and venue where the time has been achieved. Unless the time has been achieved at an ISU Championship or an ISU World Cup Competition, a copy of the list of results must be enclosed. Furthermore, the verification must include a statement from the organizing ISU Member that all conditions for recognition of achieved Qualifying Times (as stated above) have been fulfilled. The deadline to submit such information shall be communicated in an ISU Communication.

j) Confirmation/rejection/adjustment of quota places

After the conclusion of the qualification process for allocation of quota places for the respective events, the ISU will announce provisionally allocated quota places. NOCs will have to confirm and/or reject their use of these quota places to the ISU Secretariat.

If these responses from the NOCs would indicate that the overall IOC Speed Skating quota for the Olympic Winter Games will be exceeded, the maximum number of Competitors for individual events/distances will be adjusted, with the consequence that some NOCs will lose provisionally allocated quota places for the events concerned. In the first step, adjusted quota places will be based on a reduction in the maximum number of Competitors in the events starting with 500m, then 1000m and then 1500m by one Competitor until the IOC quota is reached. The respective quota place having been earned last for the respective event/distance would be eliminated first. If necessary, the next step will be to adjust quota places in the same manner as described above based on a further reduction in the maximum number of Competitors in the same events/distances.

k) Reallocation of unused quota places

Unused quota places will be reallocated on a continuous basis for each event/distance, based on the reserve lists and other criteria and conditions given above.

l) Additional Regulations

The ISU Special Regulations and Technical Rules for Speed Skating give details concerning the submission of final entries for each event/distance, for the seeding of Skaters and the drawing of pairs/heats.

D. Officials and their duties

Rule 210 Officials necessary

1. The following Officials are at least necessary:
   a) one Referee;
   b) one Assistant Referee;
   c) one Starter and his Assistant;
   d) one Finishing line judge to support the manual timekeeping procedure and observe any infringements of Rule 260, paragraph 2;
   e) one Chief Timekeeper for the manual timekeeping and a minimum of four Manual Timekeepers;
   f) when automatic timekeeping is used: one Chief Timekeeper for the automatic timekeeping procedure, and Assistant Chief Timekeepers for each of the automatic timekeeping systems (as defined in Rule 251) in use.
   g) Lap Scorers;
   h) Track Judges: two Corner Judges, one for each curve (for Olympic Winter Games, ISU Championships and other ISU Events at least two for each curve), at least one Judge to observe crossing of the lines in the finishing straight, and one Crossing Controller;
   i) necessary substitutes for these Officials;

For Olympic Winter Games, ISU Championships and other ISU Events;

j) one Ice Technical Expert;

k) one sport expert to assist the Referee with the control of entries and preparation of the drawing procedures.

2. For ISU Championships and Olympic Winter Games the Ladies' events and the Men's events shall each have a separate team of Referees and Starters. Each team consists of: one Referee, one Assistant Referee and one or two Starters.

Rule 211 Appointment of Officials

The ISU Member or affiliated club holding the competition is entitled to appoint the Officials (for exception in ISU Championships see Rule 214; in Olympic Winter Games see Rule 215). All Officials must be eligible persons.

Rule 212 Nomination of Referees and Starters for ISU Championships and Olympic Winter Games

1. Every Member of the ISU shall before April 15th announce to the ISU Secretariat the names of those individuals whose service is recommended as:

a) ISU Referee, see Rule 121, paragraph 1 b), (not more than four);

b) ISU Starter, see Rule 121, paragraph 1 b), (not more than three).

Nominations accompanied by the official form duly completed must be submitted separately for the two categories.

2. Referees/Starters nominated by an ISU Member should in general have the nationality of the country of the nominating ISU Member.

3. If an ISU Member nominates a Referee/Starter of a foreign nationality, the Referee/Starter concerned can be accepted only with the approval of the ISU Member of the country of which he is a national. The name of such Referee/Starter is to be entered in the list of the ISU Member nominating the Referee/Starter. A Referee/Starter so nominated is counted in the quota of the nominating ISU Member.

4. Members of the ISU should exercise the utmost care to nominate as Referees and Starters only fully experienced, reliable and entirely impartial individuals who possess a thorough knowledge of the appropriate ISU Rules and the English language. See also Rule 122, paragraph 1 c).

5. a) No person who has reached the age of 65 before July 1st shall thereafter be eligible to be an ISU Referee in ISU Championships and Olympic Winter Games.

b) No person who has reached the age of 60 before July 1st shall thereafter be eligible to be an ISU Starter in ISU Championships and Olympic Winter Games.

6. Among the nominated Referees/Starters the Speed Skating Technical Committee recognizes for one year a maximum of 25 individuals who may officiate as ISU Referees or Assistant Referees (A) and a maximum of 25 individuals who may officiate as ISU Starters.

7. The full list of Referees and Starters approved by the Speed Skating Technical Committee must be communicated to the ISU Members by August 1st every year.

Rule 213 Nomination of Referees and Starters for International Competitions and National Championships

Every Member of the ISU shall before April 15th announce to the ISU Secretariat the names of Referees and Starters approved by the ISU Member to officiate as International Referees and International Starters, see Rule 121, paragraph 1 b).

Rule 214 Appointment of Referees, Starters and other Officials for ISU Championships

1. The Referees, Assistant Referees and Starters for ISU Championships shall be appointed according to Rule 129, paragraph 4 of the General Regulations.
2. The Referee and the Assistant Referee for each category of Championships events (Ladies' events and Men's events, respectively) shall be of different nationalities. The same applies for the two Starters for each category. The appointments should be made with due consideration of requests made by the organizing ISU Member in their nominations, which must be submitted to the ISU not later than August 15th.
3. For ISU Championships the appointed Referees, Assistant Referees and Starters, as well as the ISU Representative and the Representative of the ISU Speed Skating Technical Committee, must be invited by the organizing ISU Member not less than 60 days before the start of the Championships.
4. For ISU Championships all other Officials required (except the ISU Representative and the Representative of the ISU Speed Skating Technical Committee) shall be appointed by the organizing ISU Member.

Rule 215 Appointment of Officials for Olympic Winter Games

1. As per Rule 121, the Referees, Assistant Referees and Starters for the Speed Skating events of the Olympic Winter Games, must be ISU Referees and ISU Starters.
2. The appointments will be made in accordance with Rule 126, paragraph 9 and Rule 214, paragraph 2.
3. The appointed Referees, Assistant Referees and Starters must be invited by the organizing committee not less than 60 days before the start of the Olympic Winter Games.
4. All other Officials required (other than the ISU Technical Delegates) shall be appointed by the ISU Member of the country in which the Olympic Winter Games are held.
5. The names of the Officials appointed in accordance with paragraph 1 of this Rule must be communicated by the ISU to the organizing committee of the National Olympic Committee as well as to the ISU Member concerned.
6. The Officials appointed are not permitted to wear national team emblems or uniforms while officiating.

Rule 216 Duties and powers of the Referee

1. The Referee is responsible for:
   a) checking the eligibility of Officials and Competitors;
   b) drawing or arranging pairs, in accordance with Rules 239 to 244;
   c) adjusting and rearranging pairs, according to Rules 245 and 246;
   d) seeing that all applicable Rules be observed for the competition;
   e) taking all decisions on disqualification of Competitors in case of violation of ISU Special Regulations or Technical Rules for Speed Skating, except for those matters related to the starting procedure, which belong to the powers of the Starter (see Rule 217);
   f) in ISU Championships, Olympic Winter Games, other ISU Events and International Competitions, giving information as to the preparation of the ice (see Rule 229).
2. The Referee is empowered:

a) to decide whether the condition of the ice and the safety measures at the track permit the holding of the event;

b) if unfavourable circumstances arise, to alter the shape and size of the track and to change the distances;

c) to introduce alterations in the announced program of the competition, in so far as these do not conflict with the ISU Regulations;

d) to accept, in agreement with the organizing ISU Member or affiliated club, another rink for the holding of the event;

At ISU Events decisions as mentioned above can only be made in consultation with the ISU Representative(s) assigned for the competition;

e) to decide whether, where and when, a race that has been declared invalid, shall be rerun;

f) if necessary, to exclude Competitors from the competition and coaches from the coaches' area (see Rule 227, paragraph 6);

g) to stop a race during its progress if there are safety concerns in the case of a fallen or injured Competitor;

h) to suspend skating until order is restored, in the case that the public interrupts the competition or interferes with its orderly conduct;

i) to cancel or postpone the competition in case of extremely cold weather (see also paragraph 4 c) below);

j) to replace the Starter or other Officials.

3. The Referee decides upon:

a) all protests made, and other matters in dispute, except those concerning the start (see Rule 217, paragraph 1) and the decisions of the finishing line judge (see Rule 220, paragraph 1);

b) all matters concerning breaches of the ISU Regulations, even if no protest has been made.

4. a) If on one day of a Championship one of the distances has been properly completed and the second distance, by decision of the Referee, is postponed to a following day, the completed distance shall not be rerun. If the Referee for any reason has to stop the race over one distance and postpone the competition to a following day before all the entered Competitors have completed the distance, all Competitors have to start again on that distance on the following day;

b) For ISU Championships and ISU Events (incl. World Cup Competitions) the Referee should recognize an air temperature limit of -20° C (-4° F) as a reason to postpone races until later in the day or the following day. It is important to take into consideration that wind increases the danger of hypothermia by lowering the effective temperature;

c) In case of unfavorable weather or other exceptional circumstances the Referee can decide to postpone some races to a following day in order to secure the completion of a Championship. The organizer of the Championship has to pay the lodging expenses for the additional days (see Rule 137, paragraph 14).

Rule 217 Duties and powers of the Starter

1. a) The Starter initiates the starting procedure by calling the Competitors to their starting lanes after having received the confirmation that the timekeepers are ready. The Starter shall give the starting orders in English (see Rule 255, paragraph 2);

b) The Competitors stay under the command and control of the Starter during the starting procedure, i.e. from the moment the Competitors are going to their starting lane until a valid start of the pair or heat has been completed. The Starter shall decide all disputes relating to the starting procedure in the mentioned period. However, exceptions to this may apply if equipment to disclose false starts is used (see Rule 255, paragraph 1.2);

c) The Starter shall take his position so that he has a clear view of the Competitors starting in the pair or heat.

Rule 218 Duties of Track Judges

1. The Corner Judges at each curve and the judge(s) observing the finishing straight shall watch for any infringement of the racing rules by the Competitors, and inform the Referee as soon as possible if observing any irregularities. The judge(s) observing the finishing straight should be positioned at the outside of the track. In competitions with two judges appointed for each curve they shall be located inside the track at the entrance and exit of each curve, respectively. If additional corner judges are available, a third judge should be located on the outside of the track at the entrance of each curve.

2. The Crossing Controller shall stay inside the race track and check the correctness of the Competitors changing from one lane to the other.

Rule 219 Duties of Lap Scorers

Lap scorers must display visibly the number of laps still to be skated. 20 to 30 meters before the beginning of the last lap a signal by bell shall be given to the Competitors.

Rule 220 Duties of Finishing Line Judge

The Finishing line judge shall determine which of the Competitors is the winner, or if they are equal. There is no appeal from his decision. However, if automatic timekeeping is being used according to Rule 251, the time recorded shall decide which of the Competitors in a pair or race is the winner, or if they are equal (see also Rule 265).

E. World Records

Rule 221
1. World Record events

The following set of World Records will be registered by the ISU:

a) For Men over distances of 500, 1000, 1500, 3000, 5000 and 10 000m and for the combined result of 2 x 500m (only from competitions where the final result of the 500m is determined by the total time after 2 races); for the total number of points over 4 distances in one and the same competition: Allround combination 500, 5000, 1500, 10 000m; Allround combination 500, 3000, 1500, 5000m; and Sprint combination 500, 1000, 500, 1000m; for National teams: for Team Pursuit races over 8 laps, <u>for Team Sprint races over 3 laps</u>;

b) For Ladies over distances of 500, 1000, 1500, 3000 and 5000m, and for the combined result of 2 x 500m (only from competitions where the final result of the 500m is determined by the total time after 2 races); for the total number of points over 4 distances in one and the same competition: Allround combination 500, 3000, 1500, 5000m; Allround combination 500, 1500, 1000, 3000m; and Sprint combination 500, 1000, 500, 1000m; for National teams: for Team Pursuit races over 6 laps, <u>for Team Sprint races over 3 laps</u>;

c) For Junior Men over distances of 500, 1000, 1500, 3000 and 5000m and for the combined result of 2 x 500m (only from competitions where the final result of the 500m is determined by the total time after 2 races); for the total number of points over 4 distances in one and the same competition: Allround combination 500, 3000, 1500, 5000m; <u>Allround combination 500, 1000, 1500 and 5000m;</u> and Sprint combination 500, 1000, 500, 1000m; for National teams: for Team Pursuit races over 8 laps, <u>for Team Sprint races over 3 laps</u>;

d) For Junior Ladies over distances of 500, 1000, 1500 and 3000m and for the combined result of 2 x 500m (only from competitions where the final result of the 500m is determined by the total time after 2 races); for the total number of points over 4 distances in one and the same competition: Allround combination 500, 1500, 1000,

3000m; and Sprint combination 500, 1000, 500, 1000 meters; for National teams: for Team Pursuit races over 6 laps, for Team Sprint races over 3 laps;

2. Conditions to be observed

The ISU Council will recognize as World Records only results achieved in competitions listed in Rule 107, paragraphs 1, 2, 3, 5, 8, 9 and 12, or in properly announced National Championships, and where the conditions for recognition have been verified by the ISU Speed Skating Technical Committee.

General conditions for recognition of World Records are:

a) The announcement of the Competition must have been published in accordance with Rule 110. For International Competitions (as specified in Rule 107, paragraphs 8 and 9) and National Championships the announcement with the detailed program of the Competition must have been received by the ISU Director General at least four weeks before the event;

b) Distances to be skated and starting times must be in accordance with the announcement. The only exception is changes made according to Rule 216, paragraph 4;

c) The track must be a Standard Speed Skating Track of 400 meters, as per conditions given in Rule 227;

d) The Referee at the Competition must belong to the list of ISU Referees, as defined in Rule 121, for the season concerned;

e) Automatic timekeeping, with photo-finish equipment as the primary system, must have been used (see Rules 248, 250 and 251);

f) The Competitor who achieves a World Record result, must have been selected for doping control and have tested negative on the day of the race;

g) The ISU World Record application forms, with supporting documents as indicated in paragraph 3 below, must be submitted by the organizing ISU Member to the ISU Director General not later than May 1st of the season concerned. The submitted documents must confirm that all applicable conditions have been fulfilled.

Further conditions for recognition of World Records are:

h) If the existing World Record is broken more than once on the same day in competition(s) at the same venue, only the best result obtained shall be recognized as a World Record. However, when the final classification for the 500m is decided based on the total time in two races, each 500m race is considered as a separate competition;

i) World Records over 3000 and 5000m Ladies and over 5000 and 10 000m Men may be recognized for times achieved in quartet starts in ISU Championships, World Cup Competitions and other ISU Events;

j) World Records over 3000m Junior Ladies and over 3000 and 5000m Junior Men may be recognized for times achieved in quartet starts in ISU Championships, World Cup Competitions and other ISU Events;

k) World Records in total points in Allround combinations over four distances can only be recognized if the competition is held over a maximum of three days, and the distances are skated in an order of sequence that is an allowed option for ISU Championships (see Rule 201, paragraphs 2 and 7). Moreover, the distances must

have been skated in the order indicated in the announcement;

l) World Records in total points in the Sprint combination can only be recognized if the competition is over two days, with each individual distance skated only once each day and with changed starting lanes (see Rule 242) on the second day;

m) Results achieved in National Championships will be considered for recognition as World Records only if recognized as national records by the ISU Member concerned.

3. Documents to be submitted and issued

The organizing ISU Member must submit to the ISU Director General the original official Protocol of the event, as specified in Rule 273, enclosing a certified survey of the track, certification documents for the timekeeping equipment used, as well as other supporting documents specified in the ISU World Record application form.

Any Competitor who equals an existing World Record and will have the result recognized by ISU according to paragraph 2 above, shall be entered in the ISU list of World Records.

For each World Record obtained, or the equalling of a World record, the ISU shall issue a diploma to the Skater.

F. World Cup

Rule 222 Speed Skating World Cup

1. A World Cup for Ladies and Men will be organized as an ISU Event under the responsibility of the ISU Speed Skating Technical Committee. Rule 208, paragraph 8 apply for the entry process. However, different entry deadlines may apply, if so stated in ISU Communications or Event announcements.

2. The Speed Skating World Cup is a series of International Competitions. World Cup points are awarded in each Competition. The final World Cup standings for each distance, or distance category, and for Team events will be decided by World Cup points accumulated by the competing Skaters or national teams during the season. A Grand World Cup ranking may be issued, based on a total of “Grand World Cup points” achieved from races held during the World Cup season.

3. The Rules and the program will be issued in a special ISU Communication for the World Cup.

G. Equipment of Competitors

Rule 223

1. Racing suits, safety equipment and team uniforms

a) Racing suits shall conform to the natural shape of the body of the Skater. Insertion or attachment of forms or devices to create different shape is not permitted. No attachments except for permanently attached stripes with a maximum height of 0.5

cm and a maximum width of 2.5 cm are allowed. For the purpose of protection against injuries, Competitors may be equipped with shin guards and padded knee protection inside of the racing suit. Competitors may wear a helmet, neck protection, gloves or mitts outside the racing suit. For ISU Events only helmets with a regular shape (conforming to the natural shape of the head) and in accordance with the specifications approved for Short Track Speed Skating (Rule 291, paragraph 1 a) will be allowed.
Further specifications concerning allowable racing suits and safety equipment may be issued by the ISU and shall then be announced in an ISU Communication or ISU Circular Letter;

b) In ISU Championships and ISU Events Skaters of the same national team (i.e. Competitors entered by the same ISU Member) must wear racing uniforms with identical design, which display the name of the country or its official ISU abbreviation. The name of the Skater may be displayed near the name of the country. (See also General Regulations, Rule 102, paragraph 6);

c) During ISU Championships, World Cup Competitions, other ISU events and Olympic Winter Games the warming-up suits of all Competitors belonging to the same national team must display the name of the country or its official ISU abbreviation. During ISU Championships, World Cup Competitions and other ISU events the name of the Skater may be displayed near the name of the country. (See also General Regulations, Rule 102, paragraph 6).

2. Skates

a) A skate is a passive mechanical extension of the leg, meant to facilitate the gliding technique. The skate consists of a blade and a shoe of any material with dimensions which do not change significantly during a competition, and a construction which connects the shoe to the blade. This construction may allow any translation and rotation of the shoe relative to the blade, in order to enable an optimal utilization of the physical capacity of the Skater, as far as it does not jeopardize the safety of the Skaters.

The skate does not contain any element that would violate the requirement that all energy expended during the Speed Skating exercise originates from metabolic work generated by the Skater during the race. There is no connection between the Skater and the skate, and no transmission of energy, matter or information to the skate, other than via the anatomical structures of the lower leg and foot. In particular, it is not permitted to heat the blades of the skates from any external source or by means of any artificial mechanisms;

b) If deemed necessary in order to avoid confusion as to what kind of equipment is permitted for Speed Skating competitions, the ISU may issue further specifications concerning the definition of allowable skates, which shall then be announced in an ISU Communication or ISU Circular Letter;

3. Infringement of equipment rules

A Competitor not complying with the rules in paragraph 1.a) and 2 above and Rule 279, paragraphs 1, 2, 3 and 4 regarding proper or required equipment, will be disqualified.

Rules 224 - 225

are reserved for possible further Special Regulations Speed Skating.

II. TECHNICAL RULES SPEED SKATING

A. Track

Track measurements and partitioning of the standard speed skating track

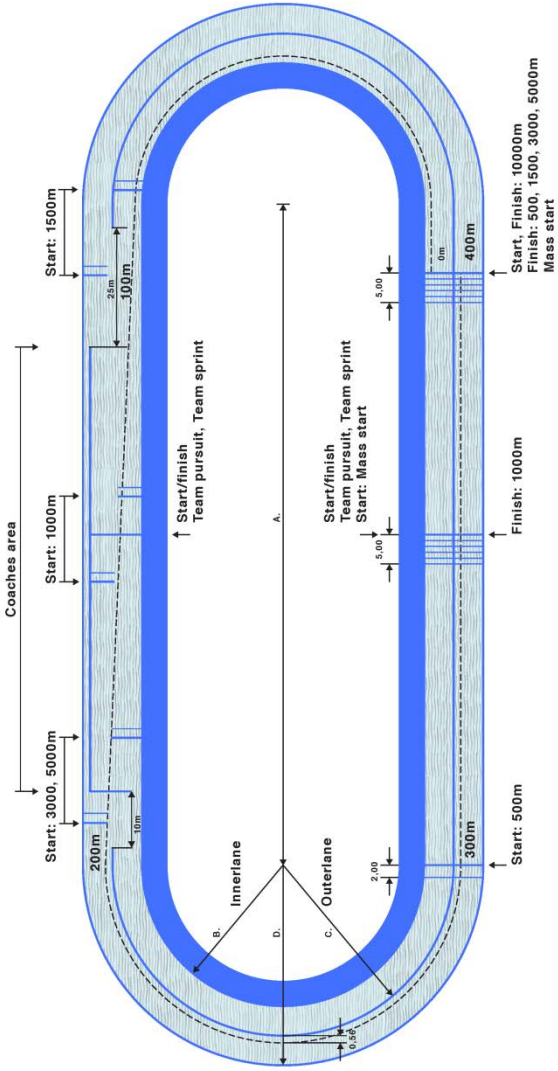

Example of standard speed skating tracks

1 = 2 x mean axis	= 2 x A	3 = Outer Curve	= C x π
2 = Inner Curve	= B x π	4 = Crossing =	
$\sqrt{A^2 + (\text{width of track})^2} - A$			

400 m Tracks

Radius inner curve		25 m
Width of each track		4 m
1 = 2 x 113.57	=	227.14 m
2 = 25.5 x 3.1416	=	80.11 m
3 = 29.5 x 3.1416	=	92.68 m
4 = $\sqrt{113.57^2 + 4^2} - 113.57$	=	0.07 m
		400.0 m

Radius inner curve		25.5 m
Width of each track		4 m
1 = 2 x 112.00	=	224.00 m
2 = 26 x 3.1416	=	81.68 m
3 = 30 x 3.1416	=	94.25 m
4 = $\sqrt{112^2 + 4^2} - 112$	=	0.07 m
		400.0 m

Radius inner curve		26 m
Width of each track		4 m
1 = 2 x 110.43	=	220.86 m
2 = 26.5 x 3.1416	=	83.25 m
3 = 30.5 x 3.1416	=	95.82 m
4 = $\sqrt{110.43^2 + 4^2} - 110.43$	=	0.07 m
		400.0 m

333 1/3 m Tracks

Radius inner curve		26 m
Width of each track		4 m
1 = 2 x 77.08	=	154.16 m
2 = 26.5 x 3.1416	=	83.25 m
3 = 30.5 x 3.1416	=	95.82 m
4 = $\sqrt{77.08^2 + 4^2} - 77.08$	=	0.10 m
		333.33 m

Radius inner curve		25 m
Width of each track		4 m
1 = 2 x 80.22	=	160.44 m
2 = 25.5 x 3.1416	=	80.11 m
3 = 29.5 x 3.1416	=	92.68 m
4 = $\sqrt{80.22^2 + 4^2} - 80.22$	=	0.10 m
		333.33 m

Rule 226 Demarcation of the competition track

(See also Rules 203 and 204 in the Special Regulations)

For demarcation of the competition lanes, fully painted lines, 5 cm wide, should be used, both in the straights and in the curves.
Normally, and always on indoor tracks, the demarcation of the lanes in the curves must include movable blocks of rubber or synthetic material (of maximum height 5 cm), 50 centimeters apart for the first 15 meters of the curve and 2 meters apart for the remaining part of the curve. The blocks shall touch the inside of the painted lines. Closed cones (20-25 centimeters high) shall be used as the first block at the entrance of each curve. When considered necessary for the visibility of the demarcation, blocks may be placed on the painted demarcation lines on the straights, with a distance of 10 meters between each block.
On open-air tracks snow may be used instead of movable blocks, but the snow must not be iced. The snow lines must then lie along the whole competition track except the crossing straight.
The Referee decides if the demarcation is in conformity with the rules.

Rule 227 Layout of the track

1. Measurement

The track must be measured by a qualified surveyor, detailed for the purpose, and with the correct position of all starting and finishing lines fixed. A protocol signed by the surveyor shall be handed to the Referee before the start of the event. This protocol remains valid for one (1) year only, unless reconfirmed by a qualified surveyor on an annual basis.

The measurement of the track shall be made half a meter outside the inner edge.

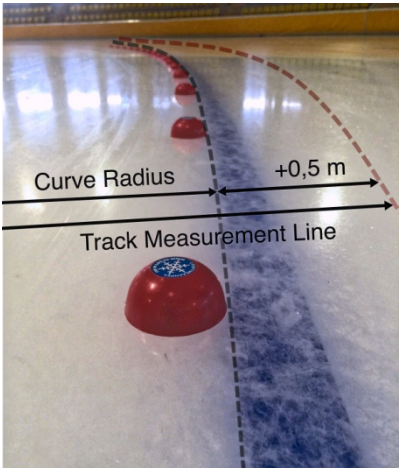

2. Starting and finishing lines

The starting and finishing lines are to be denoted by colored lines, not more than 5 centimeters wide, drawn at right angles to the straight or its extension. A pre-start line shall be placed two (2) meters before the starting lines. For the last five (5) meters before the finishing line each meter of the track shall be clearly marked. (see diagram A page 37).

On standard 400 meters tracks, the starting and finishing lines for all distances shall be at right angles to the finishing straight. The finishing line for 1000 meters shall be placed in the middle of the finishing straight and the starting lines accordingly. For Team Pursuit and Team Sprint races the starting and finishing lines shall be placed in the middle of the straights. For all other distances the finishing line shall be placed towards the end of the finishing straight, and the starting lines positioned accordingly. (see diagram A page 37)

On other tracks the starting and finishing lines should be placed so that neither the start nor the finish is in a curve.

3. Coaches' area

For coaches there shall be a specially marked area on the crossing straight. The coaches' area shall be marked by a line two (2) centimeters wide, drawn one meter from the outside edge of the track. The line begins 25 meters from the end of the curve and goes all along the crossing straight until 10 meters before the entrance to the next curve. During Team Pursuit races the coaches' area for each Team is on the opposite straight of where the respective team starts. During the starting procedure the coaches must stay at least 20 meters away from both the Starter and the starting lines of the Competitors.

a) For distances 1000m and shorter and for races with quartet starts, maximum one (1) person for each Competitor is allowed in the coaches' area. For longer distances without quartet starts and for Team Pursuit races maximum two (2) persons for each Competitor or team are allowed in the coaches' area. For Mass start and Team Sprint races coaches are not allowed in the coaches' area;

b) In order to a ensure a clear view of the finishing line for photo finish and television cameras, coaches are not allowed to pass through the finishing line area during Team Pursuit races;

c) During competition (while racing is occurring) coaches are not allowed to accompany a Skater in the warm-up lane.

Rule 228 Measures to protect safety of Skaters

1. Measures to avoid accidents

Measures must be taken to protect the safety of the Skaters against accidents. The Referee has to review and approve such measures before the competition starts.

During warm-up and training sessions Skaters and Coaches are responsible to act consciously in order to reduce risks of accidents.

2. Protection measures – minimum requirements for all competitions

The demarcation of the skating track and racing lanes by fixed stakes is not permitted. Permanent installations should be at least 3 meters from the inner edge of the skating track.
The organizer of competitions shall provide adequate protection against accidents in situations when Skaters fail to stay inside the skating track (i.e. racing lanes and warm-up lanes). On open-air tracks snow may be used for protection, on the condition that the snow is not iced. If a sufficient amount of snow of adequate quality is not available, the use of protection mats (padding) is mandatory, with the following minimum requirements:

a) The design of the mats and the materials used must give an adequate absorption effect when a Skater hits the padding;

b) The surface of the padding should be made of anti-abrasive and water resistant material;

c) The protection mats shall be at least 80 cm high and at least 30 cm thick;

d) Mats must be used in the curves and at least 20 meters onto the straight after the end of each curve;

e) Fixed objects (e.g. fences, benches or poles) within 3 meters from the inner edge of the skating track, must be protected with adequate padding;

f) The padding must be fixed in such a way that a collision between a Skater and the padding will not in itself create a significant risk for injuries.

3. Protection measures at ISU Events and Olympic Winter Games

The organizer of ISU Championships, other ISU Events and Olympic Winter Games must provide protection beyond the minimum measures described in paragraph 2 above. The organizers of these events must submit a technical description of their existing or planned safety installations, including relevant technical or scientific test results, in due time for the proposed solution to be reviewed by the ISU Sports Director or the ISU Representative/Technical Delegate for the event. The following conditions and guidelines must be observed:

a) The mats can be either of rectangular shape or a trapezium, or some other shape that has proven suitable to provide adequate protection of the Skaters. The mats may be composed of several foam layers with different densities, or any other material or solutions, on the condition that adequate protection qualities (absorption of impact, reducing the bounce-back effect) can be proven through technical/scientific tests;

b) The padding cover should be composed of anti-abrasive and non-rubberized water resistant material. At open-air rinks the solution has to be adapted to avoid water and snow to reach the inside structure of the mats. An overlapping Velcro strap shall cover the joint between the mats to present a smooth exterior surface;

c) The protection mats should be at least 60 cm thick. The minimum height should be 100 cm, but not exceed 120 cm in order to allow an adequate viewing angle for the spectators;

d) Protection mats must be used for the full length of the straights and in the curves;

e) Fixed objects (e.g. fences, benches or poles) within 3 meters from the inner edge of the skating track, must be protected with adequate padding;

f) The padding must be fixed so as to inhibit a fallen Skater from passing underneath the mats on impact. In the case the mats are resting on the ice, a smooth ice surface with no obstacles or sharp edges underneath the padding must be guaranteed. Belts or any other system that is used to control the movement of the padding should be in place and controlled continuously. The use of posts to secure the padding in the curves should be avoided, or at least be reduced to a minimum with additional adequate protection applied to the posts;

g) Adequate protection, as indicated in a) through f) above, must be in place also for the official training sessions.

More detailed specifications of adequate safety measures may be given at any time in an ISU Communication and/or in relevant ISU Memoranda. The above specifications should be considered as guidelines also for organizers of International Competitions and other high-performance speed skating competitions.

Rule 229 Ice preparation procedures at ISU Events and Olympic Winter Games

ISU Ice Commission

The ISU Ice Commission for the Event shall consist of the Referee(s) and a Representative of the ISU Speed Skating Technical Committee (or, when not present, another ISU Representative) or the ISU Technical Delegate. The ISU Ice Commission shall determine the ice preparation procedure in consultation with the technical expert of the ice rink, with the aim to give the participants equal conditions.

The Team leaders shall be informed about the procedure for ice preparation at the Team leaders' meeting before the opening draw. The detailed ice preparation schedule shall be made available to Team leaders when the start lists are announced (see also Rule 216, paragraph 1 f).

The ISU Ice Commission has the right to alter the announced ice preparation schedule. In this case the team leaders will be immediately informed about the changes and the revised schedule.

Information from the ice technical expert

The ice technical expert of the ice rink must submit to the ISU Ice Commission all information that is relevant to decide the ice preparation schedule and to monitor the ice and racing conditions at all stages during the competition. This shall include historical data on ice preparation procedures under different climatic and meteorological conditions (air temperature, ice temperature, air humidity, snow, wind, air pressure, etc.) with different spectator capacities, the amount and quality

(temperature, any chemical additives, etc.) of water used during ice cleanings, as well as statistics on ice temperatures and climatic conditions during the competition. The ISU Ice Commission should be given the opportunity of direct access to instruments or systems providing the data mentioned. On in-door tracks the ice technical expert has to provide information also on wind or air-flow conditions at any time during racing, and is responsible that the ventilation system of the track is controlled so as to avoid unequal conditions due to differences in air-flow on the level of the competition track.

B. Organization of the Competitions

Rule 230 Announcement and conduct of ISU Championships

(See General Regulations, Rule 129)

Rule 231 Communication during ISU Championships

(See General Regulations, Rule 132)

Rule 232 Date and contents of Announcements, Supplementary conditions

(See General Regulations, Rules 110–112)

Rule 233 Late announcements

(See General Regulations, Rule 113)

Rule 234 Postponement of dates of Competition Withdrawal of an announcement

(See General Regulations, Rule 114)

Rule 235 Entries, Nicknames/Preferred names, Post Entries

(See General Regulations, Rule 115)

Rule 236 Reserved

Rule 237 Validity of events

(See General Regulations, Rule 118)

Rule 238 Expenses at ISU Championships, Reimbursement to Skaters and Officials

(See General Regulations, Rule 137)

C. Drawing Procedures

Rule 239

1. Public meeting for announcements and draws

Before the start of the Competition the organizing committee has the responsibility to hold a meeting for the first draw. The entries of Competitors, the competition schedule, the names of the main officials, the draw for the starting order and the composition of start lists for the first competition day shall be announced at this meeting.

2. Drawing at ISU Championships and other ISU Events

2.1. a) At ISU Events the Referee(s) shall conduct a Team leaders' meeting to be held before the first draw. Each ISU Member that has entered participants for the Competition is required to attend the Team leaders' meeting, and can be represented by only one designated team official.

b) At the Team leaders' meeting before the first draw the Referee shall be informed by the Team leaders of any withdrawals or entries of substitutes, and the final entries for the Competition shall be confirmed. The Referee may then present the grouping of Competitors for the draws or for composition of the start lists;

c) At ISU Events the first draw should be held the day before the first day of competition.

d) For the following competition days it is the duty of the Team leaders to inform the Referee of any further withdrawals, entries of substitutes or selection of competitors for team events, according to procedures and deadlines announced by the organizing committee.

2.2. a) Each Competitor will be assigned a reference number ("starting number") for use in draw procedures, results processing, etc.;

b) The Referee will conduct the drawing of pairs. This may be done by a manual draw procedure with the involvement of people in attendance, or by a procedure ("computer draw") using a computer which is programmed to make a random selection among applicable starting numbers;

c) For following competition days the drawing of pairs or composition of start lists will be conducted by the Referee in the presence of the sport expert appointed by the organizing committee (Rule 210, paragraph 1 k) and (for ISU Events) under the supervision of an ISU Representative.

2.3. Which of the Competitors shall have the inner and which the outer lane shall be decided in the following way:

a) When the composition of pairs is decided by lot, the first drawn Competitor in the pair shall start in the inner lane or (for Team events) at the finishing straight;

b) When the composition of pairs is based on ranks obtained in preceding distances or competitions, the Competitor with the better rank shall be placed first in

the pair and accordingly start in the inner lane. However, if the rules for the Competition states that two Competitors from the same country shall not skate in the same pair, Rule 241, paragraph 3 b) applies. For the second race of a distance in competitions where the results are based on the same distance being skated twice, see Rule 242, paragraph 2;

c) If a Competitor withdraws from the start after the draw has taken place and some pairs are rearranged because of this, Rule 245, paragraphs 3 and 4 apply.

Rule 240 Drawing at World Allround Championships, European Championships and World Single Distances Championships

1. First draw at World Allround Championships

When drawing the first two distances in World Allround Championships the Competitors shall be placed in three groups, based on their best approved qualifying times for the distance concerned.

GROUP I:	The Competitors with the 8 best qualifying times;
GROUP II:	The Competitors with qualifying times ranked 9 to 16;
GROUP III:	The remaining Competitors.

For the drawing of the first distance the grouping will be based on the qualifying times on 500m, for the second distance on the qualifying times on 3000 respectively 5000m. The Speed Skating Technical Committee is responsible for the approval of qualifying times and of the time ranking lists deciding the grouping. If there is a tie in the 8th or 16th position in the time ranking list, it shall be decided by lot which Competitors are to be placed in which groups

The Competitors placed in the same group shall be paired together by drawing their starting numbers, observing Rule 239, paragraph 2.3. The first two drawn Competitors from Group III form the first pair on the distance concerned. However, if there are an odd number of Competitors entered, the first drawn Competitor from Group III shall skate single in the first pair. After Group III has been drawn, Group II follows, etc.

2. Further draw at World Allround Championships

a) In the third distance the arrangement of pairs shall be based on the ranking in total points after two distances. If some Competitors are equal in total points, the Competitor with the better time in the first distance is considered to be better ranked;

b) The starting order of the pairs shall be opposite to the ranking order of the Competitors: the Competitors ranked 1 and 2 after two distances will skate in the last pair, the Competitors ranked 3 and 4 will skate in the next to the last pair, and so on.

3. Qualification for the fourth distance at World Allround Championships

a) In the fourth distance only 8 Competitors shall start. The selection of qualified Competitors are made among Skaters ranked among the top 16 after 3 distances, and will be based on two different ranking lists: The final classification in

the longest of the three skated distances (i.e. 3000m Ladies and 5000m Men, respectively), and the classification in total points after three distances. Competitors who are among the 8 best in both of these ranking lists are directly qualified for the fourth distance. Among the Competitors who are placed among the 8 best in only one of these ranking lists, the next to qualify is the Competitor with the best position in either of the two lists. If two Competitors have equal position in the two ranking lists, the Competitor in the classification in total points after three distances is the first of them to qualify. If two Competitors share the same position in one of the ranking lists, the Competitor who is better placed in the other ranking list, will qualify first;

b) For the arrangement of the pairs for the last distance the Competitors are placed in two groups, with the same number of Competitors in each group. The Competitors with the best rank after 3 distances are placed in Group 1, the remaining Competitors are placed in Group 2. If some Competitors are equal in total points, the Competitor with the better time in the longest of the three skated distances is considered to be better ranked. In each group the Competitors are paired according to their ranks in the longest of the three distances already skated, so that the Competitor with the best rank in this distance is paired with the second ranked Competitor in this distance and will start in the inner lane, etc.;

c) In each group the starting order of the pairs shall be based on the ranking in total points after 3 distances in the following way:

- The Competitor with the best rank shall start in the last pair;
- If the second ranked Competitor has not been paired with the best ranked Competitor, this Competitor shall start in the second last pair, etc.;
- All the pairs of Group 2 shall start before the pairs of Group 1;

d) If some Skaters, who have been entitled to compete in the fourth distance, would withdraw from this distance, the Skater(s) may be replaced by the next qualified Skater(s) according to the criteria given in paragraph a) above. If necessary, also positions after the top 8 in the respective ranking lists may be considered to determine the next qualified Skater.

4. Drawing at European Championships

For the European Championships the drawing shall be made according to corresponding rules for World Championships using the same competition formats (i.e. Rule 240, paragraphs 1- 4, Rule 240, paragraph 5 or Rule 242).

5. Drawing at World Single Distances Championships

a) For each draw the Competitors shall be placed in groups, based on their individual ranking in the Special Qualification Ranking List (SQRL), as defined in Rule 208, paragraph 2, for the event concerned. Competitors without results from SQRL competitions will be ranked thereafter, according to their best approved qualifying time.

b) When a complete ranking list of the participants has been established, the Competitors shall be placed in groups of 6 Competitors each. However, the last group (of the lowest ranked Competitors) may consist of less than 6 Skaters. The group with

the 6 best ranked Competitors shall be drawn to form the three last pairs, and so on. If there would be an odd number of participants, the first pair shall consist of a single Competitor;

c) For the Team Pursuit events the sequence and composition of races (heats) will be based on the SQRL ranking of the participating teams (ISU Members) (see Rule 208, paragraph 2). The teams from the four best ranked ISU Members shall be drawn to form the two last heats, and the remaining teams shall be drawn to form the two first heats.

d) The Mass start event will be organized based on ISU Technical Rule 253, paragraph 4 b), with the following specific regulations:

i) Competitors will be seeded based on their individual ranking in the SQRL. The Competitors line up at the start line in rows of 6 Skaters, with the highest seeded Competitors in the first row.

Rule 241 Drawing at Olympic Winter Games

1. The draw for the starting order at the Olympic Winter Games shall take place for each single distance (see Rule 239).

2. a) For each draw the Competitors shall be placed in groups, based on their individual ranking in the Special Olympic Qualification Classification (SOQC), as defined in Rule 209, for the event concerned. Competitors without results from SOQC competitions will be ranked thereafter, according to their best approved qualifying time.

b) Based on their individual ranking the entered Competitors are placed in four groups:

GROUP I:	The six (6) best ranked Competitors;
GROUP II:	The Competitors ranked 7 to 12;
GROUP III:	The Competitors ranked 13 to 18;
GROUP IV:	The Competitors ranked 19 to 24;
GROUP V:	The remaining Competitors.

However for the 5000m Ladies and the 10 000m Men there will be four (4) Competitors in each group; the four best ranked Competitors are placed in Group I, the four next in Group II, etc.;

c) In case of a tie in the SOQC ranking list, the internal ranking between the Competitors concerned is decided, if necessary for the grouping, by lot.

3. a) The Competitors placed in the same group shall be paired together by drawing their starting numbers. The starting order of the pairs shall be as follows: The first two drawn Competitors from Group IV form the first pair on the distance concerned. However, if there is an odd number of Competitors entered, the first drawn Competitor from Group IV shall skate single in the first pair. After Group IV has been drawn, Group III follows, etc.

b) Two Competitors representing the same ISU Member/NOC (country) shall not start in the same pair. The following scenarios may therefore have to be dealt with:

(i) At the moment when the second Competitor in a pair is about to be drawn, the number of remaining Competitors from one country is higher than the remaining number of pairs (in the group). The drawing shall then proceed as follows:

- If the next drawn Competitor is *not* from the country concerned, the drawn Competitor will be moved to the next available spot in the start list (i.e. the inner lane of the following pair).
- This procedure is repeated until a Competitor from the country concerned has been drawn, observing that the same situation will not occur for other countries in a later pair. If that would be the case, the drawn Competitor must then be moved to the next following available spot in the start list.

(ii) The second drawn (or moved) Competitor in a pair is from the same country as the first drawn Competitor. The Competitor will then be moved to the next available spot in the start list, observing potential situations as described in (i) above.

4. The Team Pursuit event will be organized with a set of elimination phases (quarter-finals, semi-finals, the finals and other placement races), so that the final race will be a deciding race for the Olympic gold and silver medals. For each phase, the races both for Ladies and Men are completed before the next phase of races;

a) The quarter-finals (QF) are skated in a time-trial format, and a time ranking of the competing teams will be determined by the finishing times achieved by the teams. If a team will be overtaken by the other team in the heat, both teams will have to finish the race in order to get a result for this time ranking. In case of a tie (if several teams achieve the same time), the team with the better SOQC rank will be considered as better ranked. The semi-finals (SF), the finals and the placement races will be skated in elimination race format, according to Rule 261, paragraph e);

b) The composition of the heats of the quarter finals will be determined by an open draw between the entered teams;

c) The four fastest teams in the quarter-finals qualify for the semi-finals, while the remaining teams qualify for placement races for the final ranks 5-8. The fastest team from the quarter-finals are denoted QF(1), the second fastest QF (2), etc. The semi-finals will be skated as follows:

First semi-final, SF 1: QF(1) vs. QF(4)
Second semi-final, SF 2: QF(2) vs. QF(3);

d) After the completion of the semi-finals, the 4 teams that did not qualify from the quarter-finals will skate placement races for the final ranks 5-8. At first, a D-final will be skated between the two teams with the slowest times from the quarter-finals to determine final ranks 7 and 8. Thereafter a C-Final will be skated between the two fastest of the teams eliminated at the quarter-finals stage to determine final ranks 5 and 6;

e) The winners of each semi-final will advance to the A-final to compete for the gold and silver medals. The losers of the semi-finals will compete in the B-final for the bronze medal (the loser ending up at rank 4). The B-final will be skated first.

f) The quarter-finals are skated on the first competition day of the respective Team Pursuit event; the semi-finals and all the finals (including placement races) are skated on a following day;

5. The Mass start event will be organized with an elimination phase (semi-finals) where Competitors qualify for the final and decisive race.

a) The composition of the two semi-finals (SF 1 and SF 2) shall be based on the SOQC ranks of the entered Competitors, as follows:

- The best ranked Competitor will be placed in SF 1, the next ranked Competitor in SF 2, etc.
- However, each semi-final race can have maximum one Competitor from the same ISU Member (NOC). The second ranked Competitor from the same country will therefore have to be placed in a different semi-final than the best ranked Competitor.
- If a Competitor has no SOQC rank, the Competitor will be considered to have the same SOQC rank as the non-competing Skater from the same country with the best SOQC rank.

b) The 8 best ranked Skaters from each semi-final qualify for the Mass start final. In the final the Competitors are given helmet cover numbers as follows: The winner of SF 1 gets number 1, the winner of SF 2 gets number 2, the second ranked skater of SF 1 gets number 3, the second ranked skater of SF 2 gets number 4, etc.

Rule 242 Drawing at World Sprint Championships

1. For the first day's distances in World Sprint Championships the Competitors will be placed in groups, based on their best approved qualifying times on the distance concerned. For composition of groups and drawing of pairs Rule 240, paragraphs 1 and 2 apply;

2. In the third and the fourth distance the arrangement of pairs shall be based on the ranking in total points after two and three distances, respectively. If some Competitors are equal in total points, the Competitor with the better time in the first race of the distance concerned is considered to be better ranked. However, the arrangement of pairs for each distance shall be made in such a way that all participants change their starting lanes the second day; i.e. Competitors who started in the inner lane the first day against Competitors who started in the outer lane. The starting order of pairs shall be opposite to the ranking order of the Competitors: The Competitor ranked first in overall points shall skate in the last pair together with the next ranked Competitor, subject to the principle of changed lanes in the second race, and so on.

Drawing at International Sprint Competitions

3. Paragraph 2 of this Rule applies to international sprint competitions over two times 500 meters and two times 1000 meters.

Rule 243 Drawing at World Junior Championships

1. For the drawing of pairs, the Competitors will be grouped according to their best approved qualifying times, in groups of 8 Competitors each. The pairs from the group with the best ranked Competitors will be skated last. Competitors representing the same ISU Member should not compete in the same pair. See Rule 241, paragraph 3.
2. Quartet starts shall be used over 3000 meters Ladies and 5000 meters Men.
3. For the Team Pursuit and Team Sprint events the teams shall be seeded based on the ranks of the second best Competitor from the ISU Members concerned in the 1500m event (for Team Pursuit) and the 1000m event (for Team Sprint), respectively. The two best seeded teams shall skate at the end.
4. The Mass start event will be organized based on ISU Technical Rule 253, paragraph 4 b). Final classification will be determined according to Rule 265, paragraph 6:

a) The maximum number of Competitors in the event will be 28. In case of more than 28 entries, entry quotas will be allocated to ISU Members (with a maximum quota of 2 Competitors each) based on the ranking of Skaters from the respective ISU Members in the final classification in the 1500m. At first all ISU Members with Competitors in the 1500m will be allocated one quota place. Then a second quota place will be allocated to ISU Members according to the rankings in the 1500m of the second ranked Skater from the ISU Member.

b) The Competitors line up at the start line in rows of 6 Skaters, based on a random draw.

Rule 244 Drawing at International Competitions

1. In an International Competition the organizing committee gives each Competitor a number which is to be used at the draw for the starting order.

2. The organizing committee has the right to divide the Competitors entered into two or three groups for the first draw. If any group thus arranged should comprise an unequal number of Competitors, the Competitor whose starting number is drawn last shall compete with the first drawn Competitor from the following group. If a Competitor is left over because of an odd number of Competitors, he will skate alone in the group with the lowest ranked Competitors.

Events with one award of prizes, drawing and composition of pairs

3. If a competition extends over two distances with one award of prizes, the arrangements of the pairs shall be determined by lot for both distances.

4. If a competition extends over three distances with one award of prizes, the arrangement of the pairs shall be determined by lot only for the first of the distances to be skated. For the second distance the Competitors will be paired according to the rank obtained in the first distance. For the third distance the Competitors will be

paired according to their rank in total points after two (2) distances. The starting order of the pairs for the second and the third distance shall be opposite to the ranking order of the Competitors (see Rule 240, paragraphs 3 and 4).

5. If a competition extends over four distances with one award of prizes, the arrangement of pairs will be determined by lot separately for the first two distances. For the third and the fourth distance the arrangements of pairs will be determined by Rule 240, paragraphs 3 and 4, with the exception that more than 8 Competitors may start on the fourth distance.

Rule 245 Withdrawal from the start after draw. Entry of substitutes

1. If a Competitor in a competition over several distances with one award of prizes withdraws from a distance after the draw for the distance has taken place, this Competitor is not allowed to be entered again for this or any other distance.

2. a) If a Competitor is not able to start on a distance due to illness after the drawing took place, that Competitor may be replaced by a substitute.
If certain qualification criteria have been set for the competition, the sick Competitor can only be replaced by a substitute who also fulfils these criteria. However, if the competition is over several distances with one award of prizes, a substitute may be entered only before the start of the first distance;

b) In the case that a withdrawn Competitor is replaced by a substitute, the following procedure shall apply:

i) If the pairs have been decided by lot (by a draw with no grouping of the Competitors) the substitute shall start in the same pair and lane as the withdrawn Competitor would have started;

ii) If the pairs have been drawn based on a grouping of the Competitors, the substitute shall start in the group where he would have been placed (for example based on qualifying time or other ranking) if he had been entered for the competition. If the group of the substitute is not the same as the group of the withdrawn Competitor, a rearrangement of the grouping is necessary. The Competitor(s) moved to another group will start in the vacant place(s) in that group;

iii) If the pairs have been arranged based on a seeding or ranking of the participants, the pairs shall be rearranged, taking into account the seeding or ranking of the substitute.

3. If the pairs were initially decided by lot, and no substitute is being entered according to paragraph 2, the Competitor whose opponent has withdrawn, may skate alone in the pair. However, if another Competitor had been drawn to skate alone because of an odd number of Competitors, this Competitor should then replace the one who has withdrawn, in order to complete the pair. If two Competitors are left to skate alone because of withdrawals after the draw, they should be paired together. When a new pair is thus formed, the Competitors shall start in the later pair. The moved

Competitor shall start in the outer lane (see also Rule 239, paragraph 2.3). The Competitor who is moved to another pair must be informed of this at least 15 minutes before the scheduled start of his originally drawn pair.

4. If the pairs have been arranged based on a seeding or ranking of the participants, and no substitute is being entered according to paragraph 2, the pairs shall be rearranged based on the seeding or ranking of the remaining Competitors.

Rule 246 Adjustment of starting order

In a Competition over several distances with one award of prizes, a Competitor has the right to a period of rest of 30 minutes between races. If necessary, the Referee may adjust the starting order of pairs in such a way that the required rest period will be available.

D. Timekeeping

Rule 247 Automatic and manual timekeeping

1. Two methods of timekeeping exist, automatic timekeeping (as specified in Rule 251) and manual timekeeping (as specified in Rule 250).

2. a) A manual timekeeping procedure (see Rule 250) has to be put in place. However, if there are more than two independent automatic timekeeping systems in use, a manual timekeeping procedure is not required.

b) If an automatic timekeeping system is in use, the purpose of the manual timekeeping procedure is to serve as a backup in case the automatic timekeeping system(s) fails, partly or completely. (See Rule 251, paragraph 5).

3. An automatic timekeeping procedure (see Rule 251) has to be put in place for Olympic Winter Games, ISU Championships, World Cup Competitions and other ISU Events, see also Rule 251, paragraph 2 d).

Rule 248 Watches

1. For automatic timekeeping systems a certificate, issued on an annual basis, stating the reliability and accuracy of the system shall be presented to the Referee before the competition.

2. For manual timekeeping only digital electronic watches shall be used. On the request of the Referee a certificate from a watchmaker shall be produced stating that the watches are in good working order.

3. All watches used must have the capability to measure and display times with an accuracy level of at least one hundredth of a second.

Rule 249 Official times

The times are considered official when the Referee has signed the timekeeping protocol. The official times may not be questioned.

Rule 250 Manual timekeeping procedure

1. A Chief Time keeper, three timekeepers and one substitute timekeeper must be appointed. The Chief Timekeeper has the option to be assisted by a Time recorder official.

2. The timekeepers are to be positioned at the finishing line and start their watches at the moment when smoke or flash from the shot fired by the Starter becomes visible. Only in case of fog, snow, darkness, etc. the timekeepers may take their position at the starting line and start their watches at the moment of the shot. Each timekeeper should use only one watch.

3. Independently of one another the timekeepers shall take the time of both Competitors in the pair.

4. At the conclusion of each race, the Chief Timekeeper shall read the watches in consistent order (i.e. 1st, 2nd, 3rd watch for the first Competitor, then for the second placed Competitor) and observe that the times are being duly recorded. Only if one or more timekeepers have not taken the time (for any reason), the time taken by the substitute timekeeper shall be recorded.

5. The times of each timekeeper shall be recorded with the accuracy of one hundredth of a second. If the watches display times in thousandths of a second, any digits giving precision beyond a hundredth of a second shall be ignored.

6. Under the supervision of the Chief Timekeeper the time for each Competitor will then be determined and recorded in the timekeeping protocol as follows:

a) When two watches show the same time and the third watch a different time, the time of those watches in agreement will determine the result;

b) When all watches show different times, the time of the intermediate watch will determine the result;

c) If two timekeepers have not taken the time for any reason, the mean time of the other two watches will determine the result. If the mean time is not a multiple of one hundredth of a second, the lower hundredth of a second is taken.

d) When the difference between the Competitors in a pair is less than 5 meters the Finishing line judge shall report to the Chief Timekeeper for manual time-keeping the distance between the two Competitors ~~in the pair~~ at the moment the winner passes the finishing line. The time of the Competitor finishing second in a pair is then to be

determined by the Chief Timekeeper in agreement with the Finishing line judge (see Rule 220).

7. When determining the official times (according to the manual timekeeping procedure) of the Competitors, 20 hundredths of a second shall be added to the manual times recorded in accordance with paragraph 6 above.

8. If the manual timekeeping procedure is the source for the results of the competition or the results of some Competitors, the official protocol and the published list of results should clearly indicate that the results have been based on a manual timekeeping procedure, see Rule 273, paragraph 1 d).

Rule 251 Automatic timekeeping procedure

1. The term automatic timekeeping denotes a time-measuring system that is started automatically by the firing of a starting-gun and that records automatically the reaching of the finishing line by each Competitor.

2. a) Different technologies/technical solutions may be used to establish automatic timekeeping:

- An electronic system based on optical sensors or laser optical detectors to record the finish of the Competitors (with one or two complete sets of detectors installed between the lanes, as close as possible to the ice, (“optical system”);
- A transponder-based system using signals from a transmitter worn by the Competitors to record the finish of the Competitors (“transponder system”);
- A system using photographic evidence of the finish of the Competitors, in such a way that an undistorted image containing a time scale can be reproduced immediately after the finish (“photo-finish system”).

For each of these categories of systems the definition of the finish (Rule 260, paragraph 1) may need to be adjusted to the operational characteristics of the system. Guidelines for this may be issued by ISU.

b) If several automatic timekeeping systems are available, the Referee must declare before the start of the Competition which system is the primary system, and which system serves as a backup solution, respecting subparagraph c) below. If there would be several backup systems available, their order of preference should be declared prior to the start of the Competition. The Chief timekeeper must constantly monitor both the primary system and the backup system(s) in order to reveal any indications of malfunctioning of the primary system. If the primary system incidentally fails, the result of the Competitor(s) involved in the incident will be determined by the backup system.

c) If a photo-finish system is in use, the official protocol will be formed by the times and order of finish recorded by the photo finish system. The times from an

“optical system” or a transponder system may be displayed “live” on the scoreboard, but if the times of the systems in use differ, the times and order of finish of Competitors or teams from the photo-finish system determine the final results. ISU may issue further technical and procedural guidelines in this matter.

d) The use of a photo-finish system is mandatory for ISU Championships, ISU World Cup Competitions and the Speed Skating events at the Olympic Winter Games.

3. Over all distances the times shall be measured and recorded in the protocol to the accuracy of one hundredth of a second. If the watches used display accuracy beyond one hundredth of a second, these decimals shall be ignored. However, if a photo-finish system with resolution of one thousandth of a second is in use, the third decimal digit shall be recorded for the purpose of breaking ties in accordance with Rule 265, paragraph 1.

4. Chief Timekeeper and Assistant Chief Timekeepers

a) A Chief Timekeeper for the automatic timekeeping procedure, and one Assistant Chief Timekeeper for each automatic timekeeping system in use (i.e. “optical system”, photo finish and transponder), must be appointed.

b) The Chief Timekeeper shall after each race check the time(s) recorded for each Competitor by the systems in use, with the purpose of identifying any inconsistencies or malfunctions. The Assistant Chief Timekeeper(s) shall immediately after the conclusion of the distance control the complete set of times recorded by the system and inform the Chief Timekeeper of any indications or evidence of incidental malfunctioning of the system.

The Chief Timekeeper has the responsibility to prepare the timekeeping protocol that will form the basis for the official results to be submitted to the Referee for approval. The timekeeping protocol shall identify all cases where results have not been based on times from the primary system, and specify the backup system used to establish the results in those cases.

5. If the primary system incidentally fails, and no other automatic timekeeping system is available as backup, the results from the manual timekeeping procedure, according to Rule 250, paragraph 6 and 7, will be used to determine the official time. However, other readily available evidence, for example video recordings, that would make it possible to check or improve the accuracy of the manually taken times, shall be taken into account when the official time is determined. In particular, this applies to situations covered by Rule 260, paragraph 2 and 3.

Rule 252 Split times and times for individual laps

In races over several laps, the time must be taken and recorded for each lap. The accumulated lap times (split times) shall be recorded with the accuracy of a hundredth of a second, and the individual lap times shall be calculated and recorded in the protocol with the same level of accuracy.

E. Racing Rules

Rule 253

1. Counter-clockwise skating

Races are run counter-clockwise, which means that the inner side of the track is on the left hand side of the Competitor.

2. Skating in separate racing lanes

With the exception of Team Competitions (see Rule 261) and competitions or races organized in accordance with paragraph 4 below, Skaters are racing in pairs, starting in the competition lane determined by the draw, and changing lanes during each lap, as described in paragraph 3 below. The result of the distance (race) is determined by comparing the times achieved by all competing Skaters.

3. Changing lanes

a) The Competitor who skates on the inner lane shall change to the outer lane on the crossing straight, defined as the straight between the end of the curve (as marked with movable blocks) and the beginning of the next curve (as marked with a cone), and vice versa for the Competitor who skates in the outer lane (for exception see paragraph b) below). A breach of this Rule shall lead to a disqualification;

b) In the first straight of the 1000m and the 1500m when racing on a 400 meters standard track there is no changing of lanes. Similar exceptions may have to be made on tracks of other sizes for these or other distances.

4. Competitions and distances with special rules

a) For sprint competitions over the distance 100m or shorter distances, there may be three Competitors in each heat, with separate lanes for each Competitor. These competitions may be organized with elimination phases, where Competitors will advance to the next phase based on their placing in the heat and/or their achieved time;

b) Competitions may be organized as mass start races.

i) The competition track is laid out without separate racing lanes. The track may include the warm up lane, and always so for ISU Events. Cones may be used as demarcation of the track. The distance of a Mass start race is specified as a number of laps, where the countdown starts the first time the Skaters cross the finishing line.

ii) The start takes place in the middle of the finishing straight (at the 1000m finishing line on standard tracks). Competitors shall line up for the start in rows, with maximum 6 Skaters in each row, and with at least 1 meter between the rows. The positions at the start are determined by draw or by a seeding of the Competitors. When all Competitors have lined up behind the starting line, the Starter gives the command "Ready" and fires the starting

gun. Skaters moving forward and out of their starting row before the shot is fired will be disqualified.

iii) During the first lap of skating it is not allowed to accelerate to gain a better position in the pack. A breach of this rule will lead to a disqualification. If a crash involving a large part of the Skaters occurs during this first lap, the race shall be stopped by a whistle or a shot from the Starter, and a fresh start will follow immediately. When one lap has been completed, a distinctive sound signal (for example a shot from the starting gun) shall be given. From this moment on Competitors are allowed to accelerate to get a better position.

iv) The finish of the race will be at the finishing line (for the 500m) at the end of the finishing straight. This line also applies as the finishing line for intermediate sprints, if this is part of the race format.

v) Lap scoring will be conducted as prescribed in Rule 219. The first lap (without accelerations) counts as part of the distance to be skated. If the race format includes intermediate sprints, a bell signal shall be given one lap before the finish of each intermediate sprint.

vi) Competitors overtaken (with one full lap) by the leading Skater or by a specific number of Competitors, as defined in the rules announced for the Competition, must move to the outer part of the race track and abandon the race immediately.

vii) Serious obstruction of other Competitors, for example when this is causing the fall of a Competitor, will lead to disqualification.

viii) The organizer should consider adequate safety measures for the race. For the ISU Events specific safety requirements will be issued.

ix) Skaters must wear special safety equipment (see also Rule 223 and 279), armbands or bibs, as well as gadgets to support the time-keeping, as specified for the Competition. Competitors that do not comply with these requirements will be disqualified or denied to start in the race.

x) If the race format includes intermediate sprints, points are awarded for the intermediate sprints and for the final sprint. If a Competitor does not finish the race, the gained points at intermediate sprints will not be credited to the Skater when determining the final rank. Intermediate sprint points of non-finishing Competitors will not be transferred to any other Competitor. If there has been a violation of the racing rules affecting the outcome of a sprint, the offending Competitor will be disqualified and will not be considered for the awarding of points for this sprint. Moreover, a disqualified Competitor will not be considered for the award of points for the final sprint. The total of sprint points thus gained by the Competitors, determines the result of the race, but a tie in the total of sprint points will be broken by the order of finish at the final sprint. Competitors not gaining sprint points will be ranked thereafter, according to their order of finish at the final sprint. Non-finishing Competitors may be ranked by their number of completed laps before abandoning the race.

xi) Mass start races may be organized with competition rules stipulating that one or more Competitors placed last at certain stages of the race will be taken out of the race at that stage.

xii) Mass start races may be organized as pursuit races, i.e. with staggered starts where some Competitors have predefined "handicaps", for example based on results from previous races in the Competition.

xiii) During Mass start races coaches are not admitted to the coaches' area or to the infield.

xiv) The following racing rules do not apply for mass start races: Rule 253, paragraphs 2 and 3, Rule 255, paragraphs 2 and 3, 256, 257, 258 and 259.

Rule 254 Call to the start

1. Previous to each start the names of those about to compete are to be clearly called at the starting point itself and in the dressing rooms.

2. Failure to appear promptly at the start is equivalent to withdrawal from the distance.

Rule 255

1. Starting equipment

1.1. Instead of an ordinary start revolver (powder gun) an electronic start pistol may be used. In this case the following conditions should be observed:

a) The electronic pistol should have a firm trigger point;

b) The synthetic sound at the "firing of the gun" should be loud and distinct, and similar to the sound of the shot from an ordinary start revolver;

c) The smoke fire must be replaced with a visual flash, which must be distinctly different from a photoflash.

1.2. Electronic equipment, like photocells or sensitive cameras, may be used to disclose false starts. Such instruments may be used for the sole purpose of supporting the Starter during the starting procedure. However, they may also be used to verify a false start in the case that the Skater has left the starting line without having been recalled by the starter. If, in such a case, an invalid start is disclosed, this decision may be taken by a specially assigned official in charge of observing the evidence given by the detection instrument. See also Rule 255, paragraph 3.

1.3. At ISU Events and Olympic Winter Games, the Starter gives the orders by means of a microphone connected to two loudspeakers placed near the starting lines.

2. Starting procedure

2.1. The Competitors starting in the inner and outer lanes shall be identified by white and red armbands, respectively. In the case of 100m or shorter distances being arranged in heats of 3 Competitors, the Competitor in the middle lane shall wear a

yellow armband. The Competitors themselves are responsible for having the correct armband and to report in the correct starting lane. A breach of this rule will lead to a disqualification; see also Rule 223, paragraph 3 and 279, paragraph 5.

2.2. a) When the Starter orders "Go to the start" the Competitors shall place themselves between the pre-start line and the starting line. The distance between these two lines shall be two (2) meters. The Competitors have to take a stable position before the Starter calls "Ready", whereupon they are to take their starting position and keep this position absolutely until the shot is fired. Competitors may not touch the starting line or be in contact with the ice beyond the starting line with any parts of their body or equipment. Competitors must keep all of their skates entirely behind the starting line.

b) There shall be a distinct interval between the moment when the Competitors have taken their starting position and the firing of the shot. This distinct interval should be between 1 and 1.5 seconds.

3. False start

3.1. In the following situations the Starter shall declare a false start:

a) When one or both (all) Competitors intentionally are slow in taking their starting position, the offending Competitor(s) shall be given a false start;

b) When one of the Competitors breaks from his mark, thereby causing the other Competitor to follow; only this Competitor shall be given a false start;

c) When a Competitor leaves the starting position after the word "Ready", but before the shot is fired (see also Rule 217, paragraph 3).

3.2. In the case of a false start, the Competitors shall be recalled by a second shot or a whistle from the Starter. On the order of the Starter the Competitors will also receive a stop signal, at a distance of 50-60 meters from the starting line. The stop signal may be given by an assistant to the Starter with a red flag in front of the Competitors, or it may be in the form of a red light clearly visible for the Competitors. However, in competitions over 100m (or shorter) with up to 3 Skaters competing in each heat, the Starter may not recall the Skaters in the case of the second false start. The disqualification will then be announced to the Competitor(s) after the completion of the race.

3.3. The Starter shall warn the Competitor committing the first false start. If both Competitors are responsible for a false start, they shall both be warned so by the Starter. When the Starter calls the Competitors of the pair/heat for a new start after a false start has been declared, then a Competitor committing a next false start of this pair/heat shall be disqualified from the race concerned.

3.4. If light signs are used to indicate which Competitor is given a false start, a white light should indicate the first false start and a red light should be used to indicate a disqualification. The light pedestals for the starting lanes should have colors corresponding to the colors of the armbands of the respective Competitors.

Rule 256

1. Keeping within the designated competition lane

The Competitors shall keep within their designated competition lane. If a Competitor, who skates entirely within the designated competition lane, is interfered with by the other Competitor, the offending Competitor will be disqualified.

2. Cutting the inner line in the curve

When entering the curve, in the curve and exiting the curve, the Competitor is forbidden to cut the inner line of the competition lane, as defined by a fully painted line, and marked by snow or movable blocks placed at the inside of the painted line. A breach of this rule will result in the Competitor being disqualified.

3. Crossing the lines of the designated competition lane

If a Competitor skates outside the designated competition lane, thus completely crossing the line to the other lane or to the warm-up lane with the full skate, the Competitor may be disqualified, even without offending another Competitor. If there are confirmed observations of more than one such offence during the race, the Competitor will be disqualified, except for situations described in paragraph 4 below.

4. Exceptional situations

The following situations will not lead to a disqualification in accordance with paragraph 3 above:

a) If a Competitor does not keep within the inner lane in the curve or when exiting the curve towards the finishing straight and therefore crosses the line to the outer lane, the Competitor will not be disqualified if returning immediately to the inner lane. When exiting the curve, the return to the inner lane must in any case have taken place before the first of the lines defining the 1000m finish on a standard 400m track.

b) If a Competitor leaves the designated competition lane due to a fall or other accidental reason, the Competitor will not be disqualified if returning directly to the designated lane. See also Rule 260, paragraph 3.

c) If a Competitor has overtaken another Competitor skating in the same lane, and during the overtaking crossed the outer demarcation line of the lane in order to avoid interference, the overtaking Skater will not be disqualified. See also Rule 257, paragraph 2.

Rule 257

1. Responsibility in cases of collision

When leaving the curve at the beginning of the crossing straight (where the snow line or line of movable blocks is discontinued), the Competitor who is changing from the

inner to the outer lane shall not hinder the Competitor changing from the outer to the inner lane. This applies even if this is a Competitor from another pair in a quartet. The Competitor leaving the inner lane is also responsible for collisions, unless the other Competitor acts in an obstructive way.

2. Responsibility when overtaking

Overtaking in the same lane: In situations when a Competitor is about to overtake another Competitor in the same lane (e.g. when the distance between two Competitors in the same pair has increased to one lap, or in quartet starts when a Competitor in one of the pairs has caught up with the Competitor who started in the same lane in the other pair of the quartet), both Competitors have a responsibility that the overtaking can take place in a smooth way and that collisions are avoided.

a) When a situation of overtaking is approaching, the Competitor in front (i.e. the Competitor who is about to be overtaken) must keep his line (the relative position) in the lane. If the Competitor has moved to the outer part of the lane in order to facilitate the overtaking, the Competitor must stay in this part of the lane until the overtaking Competitor has passed on the inner side;

b) The overtaking Competitor is responsible that a collision is avoided as long as the Competitor in front maintains his relative position in the lane.

3. Disqualifications

If the Referee confirms a breach of this Rule (see paragraphs 1 and 2 above), the offending Competitor shall be disqualified.

Rule 258 Distance between Competitors after overtaking

1. In races on a double-laned track where the leading Skater has overtaken and passed another Competitor, the latter Skater must remain at least 10 meters behind. But he is permitted to overtake the leading Skater if he finds this is possible without impeding the leading Skater, but he must not act as a pacemaker to the Skater who is leading.
2. If the Skater being passed or the Skater having passed acts in an improper manner, this Competitor shall be disqualified.

Rule 259 Pace-making

To precede or accompany another Competitor (pace-making) is not allowed, and a Competitor making such an offence will be disqualified (see also Rule 258). However, for Team Pursuit races (see Rule 261) this rule does not apply for Competitors belonging to the same team, unless a Skater has been overtaken (lapped) by his team-mates.

Rule 260 Finishing line

1. A Competitor has completed a distance when the front tip of the blade of the first arriving skate has touched or reached the finishing line after the prescribed number of laps. However, adjusted definitions may be applied in accordance with Rule 251, paragraph 2 a).

2. Deliberately kicking out of a skate (so that the skate is losing entirely its contact with the ice) at the finishing line, or throwing the body across the finishing line, is forbidden, and will lead to a disqualification.

3. If a Competitor falls just short of the finish, so that the first skate will arrive outside the competition lanes, the time shall be taken at the moment the front tip of the blade of this skate reaches the extension of the finishing line.

4. If the automatic timekeeping system(s) in use is stopped at the finish by other means than the skate, the official time of the Competitor shall be recorded as the slower time of the times determined by the manual timekeeping procedure (according to Rule 250, paragraph 7) and the time from the automatic timekeeping system.

Rule 261 Racing rules for team competitions

1. Team Pursuit races

a) Team competitions may be announced for pursuit races with either 3 or 4 Skaters racing in each team. In both cases the finishing time (see Rule 260) of the team will be determined as the finishing time of the third Skater in the team. If less than three Skaters of the team finish the race, the team is considered not to have completed the race and shall be disqualified;

b) In Team Pursuit races the two teams shall start simultaneously at each side of the track, at the middle of the straights. If the heats have been composed according to a ranking of the teams, the best ranked team shall start on the ordinary finishing straight. Otherwise the starting positions will be determined by a draw;

c) The track must be laid out with only one competition lane, e.g. by making use of the demarcation between the inner lane and the warm-up lane on a standard track;

d) If some Skater(s) of a team is overtaken by Skaters from the other team, Rule 258, paragraph 2, applies;

e) If the competition format for the Team Pursuit competition is based on elimination races to promote teams to the next phase of races, a team overtaking the other team before the full distance has been skated in an elimination race, will already at that moment be declared the winner of the race (heat). The definition of overtaking is in this case that the third positioned Skater of the team has overtaken the third positioned Skater of the other team.

2. Relay races

Team competitions may be announced for relay races with either 3 or 4 Skaters in each team. The distances for each leg of the relay may vary, but recommended distance for each leg is 400 or 800 meters (1 or 2 laps on a standard track). Relay races may be skated in different formats. Two recommended formats (A and B) are described in paragraphs a) and b) below.

a) Competition format A for relay races:

Two teams are competing in pairs, starting in separate lanes and changing lanes according to Rule 253, paragraph 3, throughout the race. Each leg shall consist of 1 or 2 full laps. The race will start and finish at the 1000m finishing line. The exchange zone will have a length of 40 meters, extending from 20 meters before and up to 20 meters after the 1000m finishing line. The start and finish of the 40 meters exchange zone should be marked with orange cones. Relaying will take place when the Skater completing a leg is passing the Skater who is about to start the next leg. A team relaying outside the exchange zone will be disqualified;

b) Competition format B for relay races:

Maximum 4 teams compete in the same heat. In the first part of the first leg (through the first curve) the inner and outer lanes are used, with up to two Skaters starting in each lane (one Skater per team). After the exit of the first curve, only the inner lane is used. The race will start at the 1500m starting lines and finish at the finishing line of the 1500m. The distance of the first leg should in this case be either 700m or 300m. The length of the following legs should be 1 or 2 full laps. The exchange zone will have a length of 75 meters, ending at the finishing line. The start of the exchange zone should be marked with orange cones. Relaying will take place when the Skater completing a leg has touched the Skater who is about to start the next leg. A team relaying outside the exchange zone will be disqualified. For overtaking, the principles of Rule 257, paragraph 2 will apply.

3. Team Sprint races

Team competitions may be announced as Team Sprint races. The distance to be skated is a specific number of laps, equal to the number of Skaters in each team. Inner lane demarcation defines the competition track. Cones may be used as additional demarcation.

a) Races may be skated with one team racing alone, or with two teams racing at the same time. Setup for the start will be the same as for Team Pursuit races, with start and finish at the 1000m finishing line and, when two teams are racing, in the opposite position at the crossing straight for the other team.

b) The start procedure is the same as for Team Pursuit. For disqualification see ISU Rule 261, paragraph 4 and allowance of a fresh start see ISU Rule 262, paragraph 2.

c) Each Skater of the competing teams shall wear different identification defining their role in the race. Skater No. 1 in the team should wear no armband; for the next assigned Skaters the colors of the armbands should follow the sequence prescribed for quartet starts (Rule 278, paragraph 2). Rule 279 applies.

d) The first lap is skated with the Skater assigned as No. 1 leading the team, with the other Skaters of the team staying behind. At the end of each lap, the Skater leading the team has to leave to the outer part of the track, and the next assigned Skater has to lead the team during the next lap. The last assigned Skater shall skate the last lap alone and finish the race for the team.

e) Changeover to the next assigned Skater in the team must take place between the beginning of the finishing straight of the team and before the entry to the curve. The beginning and end of the changeover area will be suitably marked (e.g. by cones).

4. Disqualification and fresh starts in team competitions

If a Skater of a pursuit, sprint or relay team is disqualified for violation of racing rules according to Rules 223, 255, 256, 257, 258 or 279 the disqualification also applies for the team. A disqualification for the team will follow also if a member of the team is disqualified according to ISU General Regulations (e.g. because of breaches of eligibility rules or the ISU Anti-Doping Rules).

The rules concerning fresh starts given in Rule 262 apply also for Team Pursuit, Team Sprint and relay races. Therefore, the team shall be allowed a fresh start if one of the Skaters of the team is interfered with as described in Rule 262, paragraphs 1-3.

Rule 262 Allowance of fresh start

1. A Competitor who is interfered with through no fault of his own shall be allowed by the Referee to make a fresh start. If the Competitor has completed the initial race, the best time of the two races shall count as the result of the Competitor.

2. A Competitor who is unable to complete a race due to an obstacle on the track shall be allowed to start again. A broken skate or dirty ice shall not be accepted as an obstacle. Also the opinion of the Competitor that he has been interfered with, but not directly stopped, by individuals or incidents at the side of the racing track cannot be accepted as a reason for fresh start.

3. If the obstacle is a fallen Competitor, or is due to a fault of the other Competitor in the pair, who has violated a rule, such as an incorrect change of lane at the crossing straight or leaving his lane at any time, then the Referee cannot deny the right to make a fresh start. If a Competitor is allowed a fresh start, the Referee has to communicate it to the Competitor concerned.

Required rest time

4. The Competitor shall have the right to have a rest of at least 30 minutes between the initial race and the fresh start decided by the Referee, unless the Competitor has agreed to start in less than 30 minutes.

Starting lanes for fresh starts

5. In the case of a fresh start the Competitor shall normally start in the same lane as in the ordinary race, and always so in the second race over 500 or 1000m in a sprint competition decided by total points or by the total time from two races.

If more than one Competitor is allowed a fresh start, pairs shall be formed in order to avoid several races with only a single Competitor. If the two Competitors forming a new pair started in different lanes in the ordinary race, they shall start in the same lanes in the new race as in the first race. But if they both started in the same lanes in the ordinary race, the Competitor from the lower numbered pair shall start in outer lane in this new race (see Rule 239, paragraph 4 and Rule 245).

Rule 263 Doping

(See General Regulations, Rule 139)

F. Results of the Competition

Rule 264 Announcement of results

The results of a competition shall be announced immediately after the competition.

Rule 265 Results of events

1. Results of events over single distances

a) In competitions with award of prizes for single distances, the winner of the distance is the Competitor with the best achieved time. If several Competitors obtain the same (best) time as determined according to Rule 250, paragraph 7 (manual timekeeping procedure) or Rule 251 (automatic timekeeping procedure), each of them is to be considered a winner for the distance.

Under manual timekeeping procedure, if two Competitors who have skated in the same pair have the same time, and the Finishing line judge has decided one of them to be the winner, this Competitor occupies in the ranking over this distance one rank before the other Competitor. If other Competitors, who have skated in other pairs, both have obtained the same time, winners will be ranked with winners and seconds will be ranked with seconds.

If a photo-finish system (as specified in Rule 251, paragraph 2) with a time scale showing time resolution in thousandths of seconds is in use, the recorded times from the photo-finish system in thousandths of seconds will be used to determine the order of Competitors (or teams) in the final results. In this case the official protocol shall indicate tie-breaks by displaying the recorded time for the Competitors (teams) concerned in thousandths of a second.

b) For competitions with two counting races determining the result of a distance, the total time in the two races determine the final classification, and Competitors with the same total time will get the same rank. However, if a photo-finish system is in use (as specified in subparagraph a) above) the total times as

recorded by the photo-finish system in thousandths of seconds will be used to determine the order of Competitors in the final results. In this case the protocol shall display all results, including the total times for the two races, in thousandths of a second.

2. Results of events over several distances

In competitions over two or more distances with a single award of prizes, the winner is the Competitor who has completed all distances and obtained the lowest total of points, according to paragraphs 3 and 4 below. If several Competitors have the same total of points, these Competitors will get the same rank.

3. Calculation of points

The points are calculated as follows: For a 500m race the number of seconds counts as the number of points, for 1000m one half of the number of seconds, for 1500m one third, for 3000m one sixth, for 5000m one tenth and for 10 000m one twentieth of the number of seconds. The number of points must be calculated to three decimals, omitting the fourth decimal.

4. Final classification in competitions over several distances

The final classification in the competition is determined according to the total of points over all distances. If the number of Competitors in the last distance is limited, the classification between the remaining Competitors shall be determined by their total of points in the preceding races.

If a Competitor fails to complete the last distance, due to disqualification or some other reason, the ranking of this Competitor in the final classification will be determined as if the Competitor had not started in the last distance.

5. Results of Team Pursuit events

a) If the Team Pursuit event is skated with elimination phases, the teams progressing to the next phase will be ranked better in the results than the teams eliminated in the phase. This applies also if a team progressing to the next phase will get an invalid race result (for example DNS, DNF or DQ) in that phase. The winner of the event is the team winning the race in the last phase (final race).

b) If the Team Pursuit event is skated without elimination phases, the results are determined only by the times achieved by the teams.

c) The results of the Team Pursuit events at the Olympic Winter Games are determined according to subparagraph a) above. The winner of the B-final will be ranked as no. 3; the loser of the B-final as rank no. 4. The winner of the C-final will be ranked as no 5; the loser of the C-final as rank no. 6. The winner of the D-final will be ranked as no 7; the loser of the D-final as rank no. 8.

d) The results of the Team Pursuit events at the World Single Distances Championships and at the World Junior Championships are determined according to subparagraph b) above.

6. Results of Mass start races

a) If a Mass start race is organized with intermediate sprints, the results are determined by the total number of sprint points gained by the Competitors. The remaining Skaters are ranked according to their order of finish. The system for awarding points shall be such that the first three finishers of the final sprint will also gain the top 3 ranks in the results of the race. For further details see Rule 253, paragraph 4 b).

b) For Mass start races that are raced without intermediate sprints, the results are determined solely by the order of finish of the Competitors.

c) The results of the Mass start events at the Olympic Winter Games, at the World Single Distances Championships and at ISU World Cups are determined according to subparagraph a) above, based on the following system for intermediate and final sprints:

- During the race there will be three intermediate sprints in addition to the final sprint. For each sprint Competitors will be awarded points that count towards the final ranking of the race. The intermediate sprints will be decided at the finishing line after 4, 8 and 12 laps.
- Points for the sprints will be awarded as follows:
  - Intermediate sprints: First three (3) Skaters will gain: 5 – 3 – 1 points.
  - Final sprint: First three (3) Skaters will gain: 60 – 40 – 20 points.

d) The results of the Mass start events at the World Junior Championships and at ISU Junior World Cups are determined according to subparagraph a) above, based on the following system for intermediate and final sprints:

- During the race there will be one intermediate sprint in addition to the final sprint. The intermediate sprint will be decided at the finishing line after 5 laps.
- Points for the sprints will be awarded as follows:
  - Intermediate sprint: first three (3) Skaters will gain: 5 – 3 – 1 points.
  - Final sprint: first three (3) Skaters will gain: 30 – 20 – 10 points.

7. Results of Team Sprint races

The results of a Team Sprint race is determined by the times achieved by the competing teams, as measured when the third Skater of the team reaches the finishing line. Rule 265, paragraph 1 applies if some teams will get the same finishing time.

Rule 266 Participation in all distances

1. To be qualified to start in the final distance in a Championship or in other competitions where only a limited number of Competitors are allowed to compete in

the final distance, the Competitor must have completed all the previous distances in the competition concerned (See also Rule 275, paragraph 3).

2. In ISU Championships where the results of the Championships are based on total points or total times from all distances or races skated, a Competitor who has not completed all preceding distances or races with a valid result, will not be allowed to start in the last distance (race) of the Championships.

Rule 267 Titles

(See General Regulations, Rule 133)

Rule 268 Winners

1. a) The winner of the World Allround, World Sprint, World Junior or European Championship is the Competitor who has completed all distances and obtained the lowest total of points. In the case of ties in total points Rule 265, paragraph 2, applies;

b) For the distances at the World Single Distances Championships, the European Single Distances Championships and the individual distances of the World Junior Championships the winner is the Competitor with the best time achieved in the single race skated. For the Mass start event at the World Single Distances Championships and at the World Junior Championships the winner is the Competitor with the highest total number of sprint points gained during the race.

c) The winner of the Team Pursuit event at the World Single Distances Championships and the Team Pursuit and Team Sprint events at the World Junior Championships is the team with the best time achieved.

2. If several Competitors obtain the best time over any distance, they are all to be considered as winners over this distance.

3. The winner of an ISU Championship shall be awarded a prize and an ISU gold medal, the second Competitor a silver medal and the third Competitor a bronze medal.

4. All the winners, even if there are more than three, shall receive gold medals. If there are two winners, no silver medal is awarded. If there are three winners, no silver and bronze medals are awarded. If there are two winners, the next placed Competitor(s) shall be awarded bronze medal(s). If there is one winner and a tie between two or more Competitors for the second place, all the latter shall receive silver medals, and no bronze medal is awarded. If there is one winner and one Competitor in second place, all the Competitors having obtained the third place shall be awarded bronze medals.

Rule 269 Medals

(See General Regulations, Rule 134)

Rule 270 Prizes

(See General Regulations, Rule 120)

Rule 271 Awarding of medals

(See General Regulations, Rule 134)

Rule 272 Results of Championships

(See General Regulations, Rule 135)

Rule 273 Official protocol

1. The official protocol must contain:
   a) the starting list for each distance;
   b) the times of automatic timekeeping, recorded in hundredths of a second;
   c) the times of manual timekeeping:
      - accumulated lap times in hundredths of a second (see Rule 252),
      - finishing times in hundredths of a second (see Rule 250, paragraphs 5 and 6);
   d) The following notations shall be used to specify extraordinary situations and invalid race results:
      DNF: Did not finish (started in the race, but did not finish, without having violated any racing rule, e.g. by being interfered with by a Competitor);
      DQ: Disqualified (due to violation of a racing rule or other offence leading to a disqualification);
      DNS: Did not start (was included in the draw and listed in the final pairings, but did not appear at start);
      WDR: Withdrawn (was included in the initial draw, but withdrew from start, with the consequence that pairs were rearranged);
      RS: Reskate (after having been allowed a fresh start);
      MT: Time determined by manual timekeeping procedure according to Rule 250, paragraphs 7 and 8.

2. For ISU Championships the official protocol must be published according to specifications in the ISU Memorandum and must be sent to the ISU Director General by the ISU Members concerned.

3. For International Competitions the protocol must be filled out by the organizers at least 6 months after the completion of the competition. However, for World Records, see Rule 221, paragraph 3. If called for, the protocol must be submitted to the ISU Sports Director or the ISU Speed Skating Technical Committee.

G. Protests and Disqualifications

Rule 274 Protests

(See General Regulations, Rule 123)

Rule 275 Disqualification

1. A foul by a Competitor, if confirmed by decision of the Referee, results in a disqualification of the Competitor from the distance concerned.

2. If the foul, in the opinion of the Referee, was intentional, the Competitor may take no further part in the competitions announced. The Competitor may then also be disqualified for the distances already run, in the case of a competition over several distances with one award of prizes.

3. A Competitor who is disqualified in a race loses the right to start in the final distance in a Championship or other competitions where only a limited number of the Competitors are allowed to start in the final distance (see also Rule 240).

Rule 276 Appeals

(See General Regulations, Rule 124)

Rule 277 Exclusion of Competitors, etc

(See General Regulations, Rule 125)

H. Quartet Starts

Rule 278

1. Competition format

1.1. Quartet starts denotes a competition format where (up to) four Skaters compete on the track at the same time in two pairs, with a difference of about half a lap between the pairs at the start.
Both pairs in the quartet start their race from the same starting area, with half a lap staggered start. The starting area is located at the normal starting area for the distance concerned. The second pair of a quartet should preferably start at a moment that will result in half a lap interval between the pairs as soon as they have reached their normal speed. In case of a false start in the second pair of a quartet, the interval between the pairs after the start of the second pair should be one and a half lap.

1.2. a) Quartet starts may be used in International and World Cup Competitions and in ISU Championships. Recommended distances for quartet starts are 1500m and longer. In ISU Championships quartet starts may be used only for distances 3000m and longer;

b) Information that quartet starts will be used shall be given at the latest at the drawing for the distance. In the official protocol, as well as in the list of results, it shall be clearly stated which times have been recorded under quartet start conditions. The protocol must contain all items mentioned in Rule 273;

c) For ISU Championships quartet starts may be used only when it has been agreed between the Organizing Committee, the ISU Sports Director and the ISU Speed Skating Technical Committee and it has been published in the announcement.

2. Starting procedures and composition of quartets

2.1. a) Starting positions within each quartet are determined as follows:

1st drawn Competitor: Inner lane in first pair (white armband);
2nd drawn Competitor: Outer lane in first pair (red armband);
3rd drawn Competitor: Inner lane in second pair (yellow armband);
4th drawn Competitor: Outer lane in second pair (blue armband);

b) If the pairs are arranged according to a ranking of the Competitors, each quartet shall have the two best ranked Competitors as the second pair in the quartet;

c) If the participating Competitors cannot form a set of full quartets (with 4 Competitors in all quartets), only the first quartet may be incomplete. (The first quartet may even consist of one single Competitor);

d) In the case of withdrawals from the start after the draw, the Referee has the right to rearrange the pairs forming the quartets (see Rules 216 and 245). However, a Competitor should not be moved to another quartet than the one originally designated, unless the number of quartets will then be reduced.

2.2. All Competitors in the same quartet must collectively prepare for the start. Armbands are to be worn according to paragraph 2.1.a).

2.3. Each pair in a quartet shall have its own lap scorer, and each pair shall be separately timed.

2.4. World records from quartet starts can only be recognized for times achieved in World Cup Competitions, ISU Championships or other ISU Events. See also Rule 221, paragraphs 2.i), 2.j) and 3.

I. Equipment of Competitors

Rule 279

1. Communication equipment

While competing, the Skater is not allowed to wear any technical communication equipment for the purpose of having contact with or receiving information from other persons or sources.

2. Musical equipment

While skating in the competition lanes or in the warm-up lane during competitions the Skater is not allowed to wear any devices replaying music or other sound material.

3. Devices to enable timekeeping

If any of the timekeeping systems used at a competition requires that the Competitors wear gadgets or devices to enable proper timekeeping, the Competitor is responsible for reporting at the start equipped with the necessary devices and for wearing them during the race.

4. Armband or other means of identification

To identify the Competitors and to verify their proper position in the competition track during and at the finish of the race, the Competitors are obliged to wear armbands or other means of identification, as specified in the Technical Rules (see Rule 253, paragraph 4, Rule 255, paragraph 2 and Rule 278, paragraph 2) or as instructed by the Referee. The Competitor is responsible to wear the correct armband or other identifier when reporting at the start.

5. Infringement of equipment rules

A Competitor not complying with the rules in paragraph 223, paragraphs 1.a) and 2 and paragraphs 1, 2, 3 and 4 above regarding proper or required equipment, will be disqualified.

III. SPECIAL REGULATIONS SHORT TRACK SPEED SKATING

A. Tracks

Rule 280

Track

1. a) For ISU Events, the Olympic Winter Games and Winter Youth Olympic Games the track shall be an oval of 111.12 meters in a covered, enclosed and heated ice rink with minimum measurements of 60 x 30 meters (see diagram in the Technical Rules);

b) The width of the straight shall not be less than seven (7) meters;

c) The measurements from the apex block of the bends to the barrier shall not be less than four (4) meters;

d) Curves and turns should be made symmetrically, there should be a symmetrical curve from the end of one straight to the point where the next straight begins;

e) Besides the standard track there will be four (4) other tracks laid out which are moved one and two meters in either direction of the standard track to preserve good ice conditions. For all tracks one (1) finish line will be used. For the starting lines see diagram in the Technical Rules;

f) In Semi-Finals and Finals of 500 meters only the three (3) middle tracks as marked on the diagram shall be used.

2. a) The starting lines and finish line are to be denoted by lines (colored) drawn at right angles to the straight and not more than 2 cm wide;

b) Starting lines are drawn from the barrier and will have a length equivalent to the actual width of the straight. The finish line is drawn from the barrier and will have a length of the actual width of the straight plus 1.5 meters;

c) Only for 500 and 1000 meters: Starting at 50 cm from the inner side of the track, dots 2 cm diameter shall mark five (5) starting positions every 1.3 meters in order to define the starting positions.

d) If the inner surface of the track is colored differently from the surface of the track for esthetic purposes, then this inner surface shall be symmetrical to the layout of the track, and start exactly at the end of the finish line (see diagram in the Technical Rules.

3. For International Competitions on ice rinks of less than 30 meters in width the track that may be used is shown in the diagram in the respective Announcement.

Track markers

4. Track marking blocks of an approved design by the ISU Short Track Speed Skating Technical Committee shall be used and seven (7) must be used in the curves.

Rink Board padding

5. a) Protections must be installed to cover the boards. All measures must be taken to improve the safety of the Skaters. Mats must be covered with a water-resistant, not necessarily cut-resistant, material. Mats must be attached to the boards and to each other, with their weight on the ice. For minimum specifications see the respective Communication. A technical description of material properties and drawing of the construction of the mats must be submitted with the initial application;

b) For the Olympic Winter Games the rink board padding system must be moveable in nature with no fixed boards behind the padding system to allow for Skaters to be absorbed into the pad system upon impact.

Facilities at rink

6. a) For ISU Events and the Olympic Winter Games, electronic equipment capable of producing an image of the finish and the times of the competitors shall be used. Times shall be produced in thousands of a second. These results shall be considered Official Results;

b) For ISU Events, Olympic Winter Games (OWG) and Winter Youth Olympic Games (YOG), an Instant Video Replay System (IVR) and Race Reporting System (RRS) approved by the ISU shall be used;

c) For International Competitions a manual procedure explained in Rule 290, paragraphs 13 and 14 may be used, if the above equipment is not available;

d) For ISU Events and the Olympic Winter Games, only computer software approved by the Short Track Speed Skating Technical Committee shall be used to document the results of races, prepare the make-up of the next round of races, and produce the final results and Protocol of the competition;

e) For International Competitions the procedure outlined in Rule 296 can also be done manually;

f) All technical equipment shall be located in areas restricted to public access.

B. World Championships

Rule 281

Distances and program

1. a) The distances will be: 500, 1000, 1500 and 3000 meters individual, 3000 meters Relay for Ladies and 5000 meters Relay for Men;

b) On the distances 500, 1000 and 1500 meters there will be two (2) Finals, A and B. The qualification for the Finals will be through Qualifying rounds, according to Rule 295, paragraph 2. On the 3000 meters there will be one (1) Final, which will be skated as a Super-Final;

c) On the Relay Distances there will be two (2) Finals, A and B. The qualification for the Finals will be through Qualifying rounds, according to Rule 295, paragraph 2;

d) Based upon the number of entries the Competitors Steward confirms the qualifying schedule following the instructions of the Technical Committee;

e) The World Championships are held over three (3) days;

f) The order of the Finals and their respective Quarter-Finals and Semi-Finals will be 1500, 500, 1000 and 3000 meters;

g) The Finals of the Relays will be held after the conclusion of the individual races. Qualifying rounds of the Relays may be held on each day of the Championships provided they are held after the conclusion of the individual races of the day;

h) Skaters not having qualified for Semi-Finals over 1500 meters and/or Quarter-Finals over 500 and/or 1000 meters qualify for Ranking Finals. Skaters may forfeit their right to start in the Ranking Finals but shall announce it at the latest 30 minutes after the finish of the last race on the day before their Ranking Finals. In that case the Skaters will be ranked after those who have participated in the Ranking Finals. Skaters who have not announced their withdrawal from the Ranking Finals and do not fulfill the requirements of Rule 298, paragraph 1, are withdrawn from the Competition.
Rule 295, paragraph 6, will be applied on the Results of the Ranking Finals in order to determine the Distance Classification;

i) For World Championships the program will be:

First day	Heats	1500 meters Ladies/Men
	Preliminaries	500 meters Ladies/Men
	Heats	500 meters Ladies/Men
	Preliminaries	1000 meters Ladies/Men
	Heats	1000 meters Ladies/Men
Second day	Ranking Finals	1500 meters Ladies/Men
	Ranking Finals	500 meters Ladies/Men
Second day Main Program	Semi-Finals	1500 meters Ladies/Men
	Finals B,A	1500 meters Ladies/Men
	Quarter-Finals	500 meters Ladies/Men
	Semi-Finals	500 meters Ladies/Men
	Finals B,A	500 meters Ladies/Men
	Semi-Finals	3000 meters Relay Ladies
	Semi-Finals	5000 meters Relay Men
Third day	Ranking Finals	1000 meters Ladies/Men
Third day Main Program	Quarter-Finals	1000 meters Ladies/Men
	Semi-Finals	1000 meters Ladies/Men
	Finals B,A	1000 meters Ladies/Men
	Super-Finals	3000 meters Ladies/Men

Final A	3000 meters Relay Ladies
Final A	5000 meters Relay Men
Final B	3000 meters Relay Ladies
Final B	5000 meters Relay Men

j) The program is subject to change based on the number of entries. The order of Finals (A/B) can be modified depending on local circumstances, to be confirmed by the ISU Representative;

k) The starting times on each day may be determined by the organizing committee. The program of the second and third day is divided in two parts. The rounds of the Main Program must be in one part and not separated. When each part (session) starts, it will be held without any intermission or breaks other than to resurface the ice or give the Skaters the rest time according to Rule 295, paragraph 2.

Entries

2. a) Each ISU Member has the right to enter one (1) Competitor in each category.
If an ISU Member had one (1) Skater amongst the best thirty-two (32) Competitors in the final classification of the same preceding Championships that ISU Member may enter two (2) Competitors in total in the respective category.
If an ISU Member had more than one (1) Skater amongst the best sixteen (16) Competitors in the final classification of the same preceding Championships of which one or more scored Final Points that ISU Member may enter three (3) Competitors in total in the respective category;
If the Host ISU Member has not qualified three (3) Skaters then the Host ISU Member may choose to enter three (3) Skaters, and have the original number of qualified Skaters as their maximum number of Skaters to qualify for the same following Championship.
For all Skaters, minimum qualifying times are required for entry in this ISU Championship. The required qualifying times, the qualifying period, the category of competitions and other conditions under which the times must have been achieved, are decided by the Short Track Speed Skating Technical Committee and will be announced in an ISU Communication.
ISU Members entering participants must provide the documentation requested in this ISU Communication of the qualifying times achieved by each Competitor. This documentation must be submitted to the ISU Secretariat at the latest two (2) weeks before the Competition. The Representative of the Technical Committee will decide if the qualifying criteria has been respected and if the entry can be accepted;

b) Each ISU Member may enter the names of substitutes corresponding with the number of ordinary entries;

c) ISU Members who qualify amongst the best eight (8) Relay Teams from the World Cup Relay Classification Ladies/Men (see Rule 286, paragraph 8) may enter a Team in the respective category in the Relay competition. If the host country is not ranked amongst the top eight (8) Teams of the World Cup Relay Classification they will replace the lowest ranked Team.
ISU Members entering a Relay Team can only enter a maximum number of five (5) Skaters which will include all Skaters for both competitions: individual and Relay;

d) If a Skater is not able to start on the first distance of the World Championships due to illness after the names have been officially presented to the Competitors Steward in accordance with Rule 295, paragraph 4 f), that Skater may be replaced by another entered Skater of the ISU Member concerned. The Competitors Steward may change the make up of the races according to the seeding procedure, Rule 296;

e) In cases when a Competitor withdraws after the names have officially been presented to the Competitors Steward in accordance with Rule 295**,** paragraph 4 f), this Competitor is not allowed to be entered again in the individual part of the Championships.

Drawing and seeding procedure

3. See Rule 296

Conditions of contest

4. a) Only the top eight (8) points scorers and ties on the eighth (8th) position, on the basis of Final Points after the previous Finals, are eligible to compete in the 3000 meters Super-Final;

b) The final classification will be made according to Rule 295, paragraph 9;

c) For each of the distances a classification will be made according to Rule 295, paragraph 6 and 7.

Winner(s)

5. a) The overall winner is the Skater having attained the highest rank according to Rule 295, paragraph 9, at the conclusion of the Championships;

b) The winning Team of the World Short Track Speed Skating Championships for the Relay competition is the one which has been declared winner of the Final A. The second (2nd) and third (3rd) placed Teams of the Championships are the teams finishing accordingly in the Final A. Medals will be awarded to these Teams in accordance with Rule 134, paragraph 3;

c) The winner of the World Short Track Speed Skating Championships 500/1000/1500 meters is the Skater being declared winner of the Final A of the distance concerned. The second (2nd) and third (3rd) placed Skaters of the Championships are the Skaters finishing accordingly in the Final A. Medals will be awarded to these Skaters in accordance with Rule 134, paragraph 3;

d) For titles see Rule 133.

Rule 282 Reserved

C. World Junior Championships

Rule 283

Distances and Program

1. a) The distances will be: 500, 1000 and 1500 (twice) meters individual. Relay races over 3000 meters. Each Relay Team shall consist of four (4) Skaters per ISU Member;

b) On the distances 500, 1000 and 1500 meters, there will be two (2) Finals, A and B. The qualification for the Finals will be through Qualifying rounds, according to Rule 295, paragraph 2. On the second 1500 meters distance there will be one (1) Final, which will be skated as a Super-Final;

c) On the Relay Distances there will be two (2) Finals, A and B. The qualification for the Finals will be through Qualifying rounds, according to Rule 295, paragraph 2;

d) Based upon the number of entries the Competitors Steward confirms the qualifying schedule following the instructions of the Technical Committee;

e) The order of the Finals and their respective Quarter-Finals and Semi-Finals will be 1500, 500, 1000 and 1500 meters;

f) Skaters not having qualified for Semi-Finals over 1500 meters and/or Quarter-Finals over 500 and/or 1000 meters qualify for Ranking Finals. Skaters may forfeit their right to start in the Ranking Finals but shall announce it at the latest 30 minutes after the finish of the last race on the day before their Ranking Finals. In that case the Skaters will be ranked after those who have participated in the Ranking Finals. Skaters who have not announced their withdrawal from the Ranking Finals and do not fullfill the requirements of Rule 298, paragraph 1, are withdrawn from the Competition.

Rule 295, paragraph 6, will be applied on the Results of the Ranking Finals in order to determine the Distance Classification;

g) The Championships are held over three (3) days with the following program:

First day	Heats	1500 meters Ladies/Men
	Preliminaries	500 meters Ladies/Men
	Heats	500 meters Ladies/Men
	Preliminaries	1000 meters Ladies/Men
	Heats	1000 meters Ladies/Men
	Heats	3000 meters Relay Ladies/Men
Second day	Ranking Finals	1500 meters Ladies/Men
	Ranking Finals	500 meters Ladies/Men
Second day Main Program	Semi-Finals	1500 meters Ladies/Men
	Finals B,A	1500 meters Ladies/Men
	Quarter-Finals	500 meters Ladies/Men
	Semi-Finals	500 meters Ladies/Men
	Finals B,A	500 meters Ladies/Men
	Semi-Finals	3000 meters Relay Ladies/Men

Third day	Ranking Finals	1000 meters Ladies/Men
Third day Main Program	Quarter-Finals	1000 meters Ladies/Men
	Semi-Finals	1000 meters Ladies/Men
	Finals B,A	1000 meters Ladies/Men
	Super-Finals	1500 meters Ladies/Men
	Final A	3000 meters Relay Ladies
	Final A	3000 meters Relay Men
	Final B	3000 meters Relay Ladies
	Final B	3000 meters Relay Men

h) The program is subject to change based on the number of entries. The order of Finals (A/B) can be modified depending on local circumstances, to be confirmed by the ISU Representative;

i) The starting times on each day may be determined by the organizing committee. The program of the second and third day is divided in two parts. The rounds of the Main Program must be in one part and not separate. When each part (session) starts it will be held without any intermission or breaks other than to resurface the ice or give the Skaters the rest time according to Rule 295, paragraph 2.

Entries

2. a) Each ISU Member has the right to enter three (3) Competitors in each individual category. ISU Members entering a Relay Team may enter four (4) Competitors in the respective category;

Minimum qualifying times are required for entry in this ISU Championship. The required qualifying times, the qualifying period, the category of competitions and other conditions under which the times must have been achieved, are decided by the Short Track Speed Skating Technical Committee and will be announced in an ISU Communication.

ISU Members entering participants must provide the documentation requested in this ISU Communication of the qualifying times achieved by each Competitor. This documentation must be submitted to the ISU Secretariat at the latest 2 weeks before the Competition. The Representative of the Technical Committee will decide if the qualifying criteria has been respected and if the entry can be accepted;

b) Each ISU Member may enter the names of substitutes corresponding with the number of ordinary entries;

c) ISU Members entering a Relay Team can only enter a maximum number of four (4) Skaters which will include all Skaters for both competitions: individual and Relay;

d) If a Skater is not able to start on the first distance of the World Junior Championships due to illness after the names have been officially presented to the Competitors Steward in accordance with Rule 295, paragraph 4 f), that Skater may be replaced by another entered Skater of the Member concerned. The Competitors Steward may change the make up of the races according to the seeding procedure, Rule 296;

e) In cases when a Competitor withdraws after the names have officially been presented to the Competitors Steward in accordance with Rule 295, paragraph 4 f), this Competitor is not allowed to be entered again in the individual part of the Championships.

Drawing and seeding procedure

3. See Rule 296.

For Skaters without a World Ranking, the best season time over the distances will be used to determine a ranking for the make up of the first round of each of the related distances. These times must be submitted to the ISU Secretariat at the latest two (2) weeks before the Competition. The Representative of the Technical Committee will decide if the times can be accepted. See the respective ISU Communication for further details.

Conditions of contest

4. a) Only the top six (6) points scorers and ties on the sixth (6th) position, on the basis of Final Points after the previous Finals, are eligible to compete in the 1500 meters Super-Final on the third day;

b) The final classification will be made according to Rule 295, paragraph 9;

c) For each of the distances a classification will be made according to Rule 295, paragraph 6.

Winner

5. a) The winner is the Skater having attained the highest rank according to Rule 295, paragraph 9, at the conclusion of the Championships.

b) The winning Team of the World Junior Short Track Speed Skating Championships for the Relay competition is the one which has been declared winner of the Final A. The second (2nd) and third (3rd) placed Teams of the Championships are the Teams finishing accordingly in the Final A. Medals will be awarded to these Teams in accordance with Rule 134, paragraph 3;

c) For Titles see Rule 133.

D. Olympic Winter Games

Rule 284

Distances

1. For the Olympic Winter Games the distances are:

a) 500, 1000 and 1500 meters individual distances for Ladies and Men;

b) 3000 meters Relay for Ladies;

c) 5000 meters Relay for Men;

d) On all distances there may be Qualifying Rounds depending on the number of entries in which the Competitors qualify for the Final according to Rule 295, paragraph 2.

Entry quotas

2. a) For each edition of the Olympic Winter Games, the International Olympic Committee (IOC) stipulates an overall maximum number of Skaters to be entered into Short Track Speed Skating competitions (IOC Quota), with a target number for each gender. If for either Ladies or Men the respective IOC quota would not be reached according to the Qualifying System described in the ISU Regulations, the respective unused number of quota places would be credited and added to the quota of the other gender;

b) The total overall number of entered Short Track Speed Skaters per ISU Member, respectively National Olympic Committee (NOC quota) will be maximum ten (10) Skaters; maximum five (5) Ladies, respectively five (5) Men (for ISU Member/NOC qualified for the Relay competition) and maximum three (3) Ladies, respectively three (3) Men (for ISU Member/NOC not qualified for the Relay competition).

Qualification system

3. a) General

Quota places are earned by the ISU Members (by IOC called "NFs") respectively National Olympic Committees (NOCs) based on the results achieved by the ISU Members in the four (4) Special Olympic Qualification Classifications (SOQC) resulting from the four (4) ISU World Cup Competitions designated by the ISU to be held during October – December prior to the Olympic Winter Games. Two (2) out of four (4) World Cups shall preferably be held on the same continent as the Olympic Winter Games. The four (4) SOQCs will be for 500, 1000 and 1500 meters each for Ladies and Men, 3000 meters Relay Ladies and 5000 meters Relay Men. As per ISU Regulations, only ISU Members are allowed to enter ISU sanctioned competitions, which include ISU World Cup Short Track Speed Skating Competitions.

The three (3) best Results out of four (4) Results, over the respective distance, will be taken into consideration for the purpose of establishing the SOQC.

Upon confirmation by the ISU of the quota places earned by the ISU Members/NOCs, the subsequent entries by name to the Olympic Winter Games to be made within the applicable deadlines, are at the discretion of the respective ISU Member/NOC subject to the entered Skaters being eligible according to ISU and IOC rules.

These SOQCs will be calculated following the same rules and principles as the ISU World Cup Short Track Speed Skating classifications, i.e. using the World Cup points earned at the designated World Cup Competitions (for details please refer to the respective ISU Rules and ISU Communications). In the case of a tie in the SOQC, the following tie breaking system will be used:

i) Best place on the distance in one of the designated World Cups;
ii) Best time on the distance;
iii) Second (or if needed third, fourth, etc.) best times on the distance;

b) Host ISU Member/NOC

If not qualified through the qualifying procedure, the host ISU Member/NOC will be entitled to enter ten (10) Skaters (five (5) Ladies and five (5) Men) in all competitions together, as follows:

- Ladies and Men Relay;
- One (1) Skater in each individual competition/distance both Ladies and Men.

If the host ISU Member/NOC forfeits its right to participate in the Relay competition(s), the host ISU Member/NOC may nevertheless enter one (1) Skater in each of the individual distances;

c) Relay

The ISU Members/NOCs with the top eight (8) placed Relay Teams in the SOQC for Relay qualify for participation in the Olympic Winter Games Relay competitions. If the host ISU Member/NOC of the Olympic Winter Games is not amongst those qualified on the basis of the Relay SOQC, the respective Relay Team of the host ISU Member/NOC will replace the ISU Member/NOC ranked eighth (8th) in the SOQC for the Relay;

d) Individual distances

ISU Members/NOCs qualified for the Relay competitions may enter a maximum of five (5) Skaters in total. The Skaters competing in the individual competitions must be among the Skaters in the Relay Team.

ISU Members not qualified for the Relay competitions can only send the number of Skaters equal to their highest number of starting places on any of the individual distances.

For the individual distances, taking into account the above-mentioned ramification from the Relay qualification, which for the IOC quota will have priority, the quota places are assigned to ISU Members/NOCs in the order of the respective SOQC. All ISU Members/NOCs having Skaters ranked first (1st) over the distances 500, 1000 and 1500 meters get one (1) starting place on the respective distance. Following that the ISU Members/NOCs having Skaters ranked second (2nd) get one (1) starting place, etc. until the following criteria are met:

i) The number of quota places per ISU Member/NOC has reached the maximum of three (3) Skaters per distance;

ii) The number of Skaters on the respective distances has reached the maximum number of Skaters for that distance; i.e. the maximum number of Skaters over 500 and 1000 meters will be thirty-two (32). The maximum number of Skaters over 1500 meters will be thirty-six (36);

iii) The total number of Skaters per category (Ladies/Men) has reached the IOC quota;

iv) If the number of Skaters per distance has not reached the maximum number of Skaters (32 for 500 and 1000 meters and 36 for 1500 meters) on one or more distances, and the process of simultaneously qualifying cannot be continued without exceeding the IOC quota, then Skaters will be added on a one-by-one basis until the IOC quota has been reached. The next available Skater(s) per distances with the highest rank will be added on the respective distance. In the case of a tie the shortest distance will prevail.

v) If according to sub-paragraph i), ii), iii), iv) above the number of actually entered Skaters by name has not reached the maximum per distance (32 for 500 and 1000 meters and 36 for 1500 meters) then the ISU Member/NOCs having Skaters entered as per sub-paragraphs i), ii), iii) and iv) above, will be allowed to enter the same Skaters in the respective distance(s) in the order of the respective SOQC, up to the maximum of three (3) Skaters per distance. Consequently this will not affect the total number of entered Skaters and the IOC quota remains respected.

vi) In the exceptional case that the number of Skaters per distance cannot be filled (32 for 500 and 1000 meters and 36 for 1500 meters) after applying the procedures in the sub-paragraphs i), ii), iii), iv) an v) above then ISU Members/NOCs who have qualified for the Relay but who have no individual Competitors will be allowed to enter Skaters on the respective distance(s). In the case of a tie the Relay Team with the highest rank will prevail. Consequently this will also not affect the total number of entered Skaters and the IOC quota remains respected.

Process of confirmation of places

4. After the designated ISU World Cup Competitions will be completed and based on the resulting SOQC, the ISU will inform the ISU Members/NOCs of their respective total number of quota places and the number of Skaters each ISU Member/NOC can enter per individual distance. NOCs will be requested to confirm to the ISU the use of quota places within a specific deadline to be announced through an ISU Communication.

Reallocation of unused quota positions

5. Unused quota places will be redistributed to ISU Members/NOCs based on the different SOQCs. NOCs will be requested to confirm within three (3) days whether they accept the offered reallocation of quota places, but at the latest within the deadline to be announced through an ISU Communication.

Unused Relay quota places will be replaced with the next best placed Team based on the results of the relay SOQC.

Qualifying Timeline

6. Qualifying procedures for the Olympic Winter Games will be defined and communicated through a specific ISU communication at the latest by October 1st in the pre-Olympic season.

Medal assignments at Olympic Winter Games

7. a) For the Olympic Winter Games only, Finals A and B will take place for the 500, 1000 and 1500 meter individual final races, and for the Ladies 3000 meter Relay and Men’s 5000 meter Relay final races;

b) The Finals A and B are created so that, to the extent possible, the three (3) IOC medals with accompanying diplomas and the five (5) additional IOC diplomas (together referred to as the "IOC Awards") available for each race are actually awarded to eight (8) Skaters or eight (8) relay Teams;

c) The eight (8) IOC Awards are conferred on Skaters or Teams in the order of finish (from first to last), starting with the Final A, and thereafter, as necessary to fill the IOC Award positions, continuing with Skaters or Teams (from first to last) finishing the Final B;

d) Vacancies in the eight (8) IOC Award positions may be created in the Final A or B race by: (i) Skater or Team sanctioned with a penalty, yellow card, or red card (ii) Skater or Team did not start (DNS) or (iii) Skater or Team did not finish (DNF) ;

e) A penalty, yellow card, red card, DNS or DNF Skater or Team in the Final A or Final B is not eligible to receive an IOC Award. The next finishing Skater or Team, and the succeeding finishing Skaters or Teams, whether in the Final A or the Final B, considered in their respective finishing sequence (from first to last), move up. Finishing time established by any Skater or Team is not a qualifying factor;

f) For the avoidance of doubt, vacancies in the eight (8) IOC Award positions due to penalty, yellow card, red card, DNS or DNF shall be filled as follows:

i) If a penalty, yellow card, red card, DNS or DNF occurs in the Final A creating a vacancy in the IOC Award positions, the next-ranking Skater or Team who finished the Final A race, moves up to fill the vacancy. This advancement procedure is followed in like manner for additional vacancies in IOC Award positions until no finishing Skaters or Teams from the Final A remain available to be advanced.

ii) If one or more of the IOC Award positions remains vacant after the above procedure for filling IOC Award vacancies with Final A finishers is completed, the next-ranking Skater or Team (or skaters or Teams as the case may be) finishing the Final B moves up to fill the IOC award vacancy or vacancies;

g) Any Skater or Team not finishing the Final A or Final B is not eligible for an IOC Award, and if this results in less than eight (8) Skaters or Teams being available for an IOC Award, the vacant IOC Award position(s) shall not be filled and the award(s) shall not be conferred.

E. European Championships

Rule 285

Distances and program

1. a) The individual distances will be 500, 1000, 1500 and 3000 meters. For all Relay races the distances will be 3000 meters for Ladies and 5000 meters for Men;

b) On the distances 500, 1000 and 1500 meters there will be two (2) Finals, A and B. The qualification for the Finals will be through Qualifying rounds, according to Rule 295, paragraph 2. On the 3000 meters there will be one (1) Final, which will be skated as a Super-Final;

c) On the Relay Distances there will be two (2) Finals, A and B. The qualification for the Finals will be through Qualifying rounds, according to Rule 295, paragraph 2;

d) Based upon the number of entries the Competitors Steward confirms the qualifying schedule following the instructions of the Technical Committee.

e) The European Championships are held over three (3) days;

f) The order of the Finals and their respective Quarter-Finals and Semi-Finals will be 1500, 500, 1000 and 3000 meters;

g) Skaters not having qualified for Semi-Finals over 1500 meters and/or Quarter-Finals over 500 and/or 1000 meters qualify for Ranking Finals. Skaters may forfeit their right to start in the Ranking Finals but shall announce it at the latest 30 minutes after the finish of the last race on the day before their Ranking Finals. In that case the Skaters will be ranked after those who have participated in the Ranking Finals. Skaters who have not announced their withdrawal from the Ranking Finals and do not fullfill the requirements of Rule 298, paragraph 1, are withdrawn from the Competition.
Rule 295, paragraph 6, will be applied on the Results of the Ranking Finals in order to determine the Distance Classification;

h) The Finals of the Relays will be held after the conclusion of the individual races. Qualifying rounds of the Relays may be held on each day of the Championships provided they are held after the conclusion of the individual races of the day;

i) For European Championships the program will be:

First day	Heats	1500 meters Ladies/Men
	Preliminaries	500 meters Ladies/Men
	Heats	500 meters Ladies/Men
	Preliminaries	1000 meters Ladies/Men
	Heats	1000 meters Ladies/Men
	Heats	3000 meters Relay Ladies
	Heats	5000 meters RelayMen
Second day	Ranking Finals	1500 meters Ladies/Men
	Ranking Finals	500 meters Ladies/Men
Second day Main Program	Semi-Finals	1500 meters Ladies/Men
	Finals B,A	1500 meters Ladies/Men
	Quarter-Finals	500 meters Ladies/Men
	Semi-Finals	500 meters Ladies/Men
	Finals B,A	500 meters Ladies/Men
	Semi-Finals	3000 meters Relay Ladies
	Semi-Finals	5000 meters Relay Men
Third day	Ranking Finals	1000 meters Ladies/Men
Third day Main Program	Quarter-Finals	1000 meters Ladies/Men
	Semi-Finals	1000 meters Ladies/Men
	Finals B,A	1000 meters Ladies/Men

Super-Finals	3000 meters Ladies/Men
Final A	3000 meters Relay Ladies
Final A	5000 meters Relay Men
Final B	3000 meters Relay Ladies
Final B	5000 meters Relay Men

j) The program is subject to change based on the number of entries. The order of Finals(A/B) can be modified depending on local circumstances, to be confirmed by the ISU Representative;

k) The starting times on each day may be determined by the organizing committee. Each day's program can be divided in two parts. The rounds of the Main Program must be in one part and not separate. When each part (session) starts it will be held without any intermission or breaks other than to resurface the ice or give the Skaters the rest time according to Rule 295, paragraph 2.

Entries

2. a) Each European ISU Member has the right to enter one (1) Competitor in each category.

If a European ISU Member had one (1) Skater amongst the best thirty-two (32) Competitors in the final classification of the same preceding Championships that ISU Member may enter two (2) Competitors in total in the respective category.

If a European ISU Member had one (1) or more Skaters among the best eight (8) Competitors in the final classification in the same preceding Championships that ISU Member may enter three (3) Competitors in total in the respective category.

If the Host ISU Member has not qualified three (3) Skaters then the Host ISU Member may choose to enter three (3) Skaters, and have the original number of qualified skaters as their maximum number of Skaters to qualify for the same following Championship.

For all Skaters minimum qualifying times are required for entry in this ISU Championship. The required qualifying times, the qualifying period, the category of competitions and other conditions under which the times must have been achieved, are decided by the Short Track Speed Skating Technical Committee and will be announced in an ISU Communication.

ISU Members entering participants must provide the documentation requested in this ISU Communication of the qualifying times achieved by each Competitor. This documentation must be submitted to the ISU Secretariat at the latest two (2) weeks before the Competition. The Representative of the Technical Committee will decide if the qualifying criteria has been respected and if the entry can be accepted;

b) Only the twelve (12) highest ranked European ISU Members in a special Relay Classification over the two (2) most recent World Cups held in Europe can enter a Relay Team Ladies/Men in the respective category in the Relay competition.

If the host country is not ranked amongst the top twelve (12) Teams of the World Cup Relay Classification they will replace the lowest ranked Team. If an ISU Member forfeits its right to participate then the next ranked European ISU Member will be invited to participate;

c) Each ISU Member may enter the names of substitutes corresponding with the number of ordinary entries;

d) ISU Members entering a Relay Team can only enter a maximum number of five (5) Skaters which will include all Skaters for both competitions: individual and Relay;

e) If a Skater is not able to start on the first distance of the European Championships due to illness after the names have been officially presented to the Competitors Steward in accordance with Rule 295, paragraph 4 f), that Skater may be replaced by another entered Skater of the ISU Member concerned. The Competitors Steward may change the make up of the races according to the seeding procedure, Rule 296;

f) In cases when a Competitor withdraws after the names have been officially presented to the Competitors Steward in accordance with Rule 295, paragraph 4 f), this Competitor is not allowed to be entered again in the individual part of the Championships.

Drawing and seeding procedure

3. See Rule 296.

Conditions of contest

4. a) Only the top eight (8) points scorers and ties on the eighth (8th) position, on the basis of Final Points after the previous Finals, are eligible to compete in the 3000 meters Super-Final;

b) The final classification will be made according to Rule 295, paragraph 9;

c) For each of the distances a classification will be made according to Rule 295, paragraphs 6 and 7.

Winner(s)

5. a) The overall winner is the Skater having attained the highest rank according to Rule 295, paragraph 9, at the conclusion of the Championships. The distance winner 500/1000/1500 meters is the Skater being declared winner of the Final A. The second (2nd) and third (3rd) placed Skaters of the Championships are the Skaters finishing accordingly in the Final A. Medals will be awarded to these Skaters in accordance with Rule 134, paragraph 3;

b) The winning Team of the European Short Track Speed Skating Championships for the Relay competition is the one which has been declared winner of the Final A. The second (2nd) and third (3rd) placed Teams of the Championships are the teams finishing accordingly in the Final A. Medals will be awarded to these Teams in accordance with Rule 134, paragraph 3.

F. World Cup Competitions

Rule 286

Conditions of contest

1. A World Cup for Ladies and Men will be organized as an ISU Event under the responsibility of the Short Track Speed Skating Technical Committee. Additional rules and details are published each season in an ISU Communication.

2. a) During a season a number of World Cup Competitions are scheduled;
b) The World Cup Competitions designated for Olympic Qualification may have a different competition format.

3. The World Cup is a series of International Competitions held each season, open to ISU Members, with the following criteria;

- Entries from at least four (4) ISU Members;
- The Competitions must follow the rules in the appropriate Communication. The Short Track Speed Skating Technical Committee may if needed modify the World Cup Communication after the second and fourth World Cup Competition in a season;
- No other race categories shall be allowed during these Competitions;
- Each ISU Member may enter a number of Skaters, in accordance with the World Cup Communication, which will include all Skaters for both competitions: individual and relay;
- All Officials appointed by the ISU must be ISU Officials.
- All Assistant Referees, Starters and Competitors Stewards must be at least on the List of International Officials with a mark "W" for World Cups.
  For World Cups designated for Olympic qualification, all Assistant Referees, Starters and Competitors Stewards must be on the List of ISU Officials;
- At least three (3) qualified Officials from other ISU Members shall be included amongst those appointed.

4. a) The World Cup Relay Classification determines the entries for the Relay at the World Championships, Rule 281, paragraph 2.
By making an entry for a World Cup Competition the ISU Member confirms that if qualified the ISU Member will participate in the respective Championships. The ISU Member may forfeit these rights by notifying the ISU Council and the Short Track Speed Skating Technical Committee in writing before the last World Cup Competition of the season;
b) The Special Relay Classification referred to in Rule 285, paragraph 2.b), determines the entries for the Relay at the European Championships.
By making an entry for a World Cup Competition held on the territory of a European ISU Member, the ISU Member confirms that, if qualified, the ISU Member will participate in the Relay Competition at the European Championships. The ISU Member may forfeit these rights by notifying the ISU Council and the Short Track Speed Skating

Technical Committee in writing before the last World Cup Competition of the season in Europe;

c) The Special Relay Classification for qualification for the European Championships will follow the Rules and Procedures of the World Cup Relay Classification;

d) Following the General Regulations, the ISU Council shall impose penalties upon any ISU Member for not being in compliance with this requirement.

5. The program of each World Cup Competition must include the following items:
Single distances for individuals:

- 500, 1000, 1500 meters. One (1) of these distances will be skated twice.

Relay:

- 3000 meters for Ladies
- 5000 meters for Men

6. a) Entries must be made by the ISU Members in accordance with criteria confirmed in the appropriate ISU Communication.

b) If a Skater is not able to start on the first day of the Competition and/or in the first race of a distance due to illness/injury after the names have been officially presented to the Competitors Steward in accordance with Rule 295, paragraph 4 f), that Skater may be replaced by another entered Skater of the ISU Member concerned. The Competitors Steward may change the make-up of the races according to the seeding procedure, Rule 296;

c) In cases when a Competitor withdraws after the names have officially been presented to the Competitors Steward in accordance with Rule 295**,** paragraph 4 f), this Competitor is not allowed to be entered again;

d) Minimum qualifying times are required for entry in World Cup Competitions. The required qualifying times, the qualifying period, the category of competitions and other conditions under which the times must have been achieved, are decided by the Short Track Speed Skating Technical Committee and will be announced in an ISU Communication.
Members entering participants must provide the documentation requested in this ISU Communication of the qualifying times achieved by each Competitor. This documentation must be submitted to the ISU Secretariat at the latest two (2) weeks before the Competition. The Representative of the Technical Committee will decide if the qualifying criteria has been respected and if the entry can be accepted.

7. Classifications at each World Cup Competition:

a) At each World Cup Competition the following Classifications (see Rule 295, paragraph 6) will be made:

- Distance Classification 500 m Ladies / Men;
- Distance Classification 1000 m Ladies /Men;
- Distance Classification 1500 m Ladies / Men;
- Distance Classification Relay Ladies /Men;
- Classification Teams Ladies / Men;

b) The Distance Classifications over the distances 500, 1000, 1500 meters and Relay will follow the Rules for Distance Classifications (see Rule 295, paragraph 6) ;

c) The Team Classification will be calculated by adding the two (2) best results on all individual distances and the relay together. In the Classification of Teams only ISU Members will be listed whose Skaters have participated in both Relay and individual distances. In the case of a tie the results in the Relay will prevail.

8. World Cup Classifications:

a) - World Cup Individual Distance Classifications;

- World Cup Relay Classification (for World Championship Relay qualification);

- World Cup Team Classification;

b) The points scoring for each of the above Classifications at World Cup Competitions are specified in an ISU Communication;

c) Points are awarded only if ranked on the respective classification of that competition. Skaters/Teams who did not finish, received a penalty or yellow card, in the first qualifying round will receive a virtual rank equal to the number of participants on the distance concerned plus 1;

d) In the case of a tie the higher number of ranking points shall be awarded to both Skaters/Teams;

e) A number of best Results over the respective distance in the season will be taken into consideration for the purpose of establishing the World Cup Classification (See the World Cup Communication) ;

f) In the case of a tie in a World Cup Distance Classification over 500, 1000, 1500 meters or Relay the most recent result of the above mentioned results (paragraph 8 e) will decide the final order of ranking. If the tie persists, subsequent results will be used to determine the order of ranking. If the tie further persists the best time from the specified results (paragraph 8 e) will be taken;

g) In the case of a tie in the World Cup Team Classification the World Cup Relay Classification will prevail.

9. World Ranking Lists:

a) For the purpose of making up the first Qualifying Round at any ISU Event the following World Ranking Lists shall be maintained over all individual and Relay Distances:

- World Ranking List 500 m Ladies / Men;
- World Ranking List 1000 m Ladies / Men;
- World Ranking List 1500 m Ladies / Men;
- World Ranking List Overall Ladies / Men;
- World Ranking List Relay Ladies / Men.

b) For the World Ranking Lists the number of results that will count is equal to the number of times the distance is scheduled for the current season. The points scored during this number of most recent competitions over the distance are added but the two (2) worst results are ignored;

c) In the case of a tie in a World Ranking List the most recent result in any of the above mentioned results (paragraph 9 b) will decide the final order of ranking. If the tie persists, subsequent results will be used to determine the order of ranking. If the tie further persists the best time from the specified results (paragraph 9 b) will be taken;

d) The Overall World Ranking List is based on the highest Rank in any of the World Ranking Lists over 500, 1000 and 1500 meters. In the case of a tie the highest Rank in one of the other two World Ranking Lists shall be taken. If the tie persists after taking the World Ranking Lists over 500, 1000 and 1500 meters into account then a draw will be held by the Competitors Steward to decide the order in which the Skaters will be seeded.

10. These current World Cup Classifications as specified shall be circulated by the Short Track Speed Skating Technical Committee each time results of World Cup Competitions are received. The World Cup Classifications commence with the first World Cup Competition each season and then maintained throughout the series of World Cup Competitions. The Classifications will be concluded with final standings after the last World Cup Competition.

G. Competitions

Rule 287

Competitions

1. In addition to the distances 500m, 1000m, 1500m, 3000m, 3000m Relay and 5000m Relay, International Competitions may also include races held over shorter or longer distances and possibly with a different number of participants per race. In Short Track Speed Skating, the following races and/or competitions can be held additionally:

- Mixed Team competition
- Team competition
- Points races
- Elimination races
- Combined Points races
- Pursuit races
- Team Madison Relay races
- Nations Trophy Short Track Speed Skating
- Win & Out races

2. For details see the respective ISU Communication.

3. The Global Club Competition can be organized biannually under the responsibility of the Short Track Speed Skating Technical Committee. Basic principle of the Competition is one overall club classification so that only a club can win this Competition. Every club affiliated to an ISU Member is eligible to participate. Conditions of contest, entries, additional rules and details are published in the Announcement.

4. The events listed under paragraph 1 and any other possible new events may be tried out at International Competitions provided the following directions are observed

a) An application must be sent in advance to the Technical Committee, and the approval of the Committee must be obtained;

b) In the announcement of the competition, information must be given as to the kind of method to be tried out;

c) Not later than two (2) weeks after the competition, the Organizing ISU Member must submit a report on the new method to the Technical Committee.

H. Officials and their duties

Rule 288

Representative of the Technical Committee

1. The Representative of the Short Track Speed Skating Technical Committee will make at least one (1) consultation and inspection visit during the two (2) years before the ISU Event. The Representative of the Short Track Speed Skating Technical Committee will be present at the ISU Event and check all technical matters concerning the condition, adequacy and scheduling for use of all skating facilities used in connection with the ISU Event. In addition, as necessary, he will act as a liaison between the Referee and the organizers.

2. The Representative of the Short Track Speed Skating Technical Committee must not be an Official or member of the ISU Member organizing the particular ISU Event.

3. The Representative of the Short Track Speed Skating Technical Committee shall not also serve as a Referee, Assistant Referee, Starter or Competitors Steward in the same ISU Event except in an emergency.

4. The Representative of the Short Track Speed Skating Technical Committee or his Assistant must be present from the beginning of the official training for all Competitors.

5. The Representative of the Short Track Speed Skating Technical Committee shall conduct inquiries during a competition regarding any omissions or failure to observe the regulations with the Officials and/or organizers concerned.

6. The Representative of the Short Track Speed Skating Technical Committee shall submit a written report to the Technical Committee regarding his observations.

7. The Chair of the Short Track Speed Skating Technical Committee shall conduct inquiries regarding any reported omissions or failure to observe the regulations.

Rule 289

Nomination and Appointment of Officials

Nomination of Officials

1. a) Every ISU Member may submit applications of named individuals within their Association qualified to serve as Referees, Starters and Competitors Stewards at International Competitions to the ISU Director General;

b) These completed applications may be made at any time during the year;

c) Once an individual is approved by the Short Track Speed Skating Technical Committee and placed on the International List, that individual shall remain on the list and does not require re-nomination annually;

d) Removal from the ISU List or International List shall occur only if:

- a written resignation, signed by the individual concerned, is received from the ISU Member announcing the individual's retirement, or
- the Short Track Speed Skating Technical Committee removes the individual from the List as the result of an imposed penalty, or a written request, with reasoning, is received from the ISU Member concerned;

e) To qualify as an International Official the individual shall have at least the following experience at competitions and courses conducted in accordance with ISU Regulations. The ISU Member is responsible to check the following requirements and must confirm in writing to the Short Track Speed Skating Technical Committee.

- Served at two (2) National Championships in the position being nominated for;
- Attended at least one (1) Officials Course conducted by the ISU Member within the past thirty-six (36) months;
- Served as an Official in any capacity at an International Competition in the past thirty-six (36) months;

f) For each of the International Officials, proof of their activities as an Official in Short Track Speed Skating Competitions during the preceding three (3) years must be submitted on an annual basis to the Short Track Speed Skating Technical Committee. In the case of non-compliance the Short Track Speed Skating Technical Committee may remove the Official from the List.

2. These Officials should in general have the nationality of the country of the ISU Member nominating them.

3. If an Official is of a foreign nationality, he can be accepted only with the approval of the ISU Member of the country of which he is a national. The name of this Official is to be entered in the list of the nominating ISU Member. An official so nominated is counted in the quota of the nominating ISU Member.

4. ISU Members should exercise the utmost care to nominate as Referees, Starters, and Competitors Stewards only fully experienced, reliable and entirely impartial

individuals who possess a thorough knowledge of the appropriate ISU Rules and fluent ability in the English language.

5. a) Among the nominated Referees, Starters and Competitors Stewards the Short Track Speed Skating Technical Committee shall recognize a maximum of thirty-five (35) individuals who shall officiate as Referees or Assistant Referees, twenty (20) individuals who shall officiate as Starters and twenty (20) individuals who shall act as Competitors Stewards in ISU Events and the Olympic Winter Games;

b) The Technical Committee will record all activities of these Officials and maintain a Database of Officials;

c) The Short Track Speed Skating Technical Committee may mark individuals on the List of ISU Officials with an “A” indicating that they may only officiate in an assisting capacity at ISU Events;

d) The Short Track Speed Skating Technical Committee may mark individuals on the List of International Officials with a “W” indicating that they may officiate at World Cups also.

6. a) To be considered as ISU Referees, ISU Starters and ISU Competitors Stewards, those individuals on the International list shall have at least fulfilled the following requirements:

- Served in his nominated category at least twice at International Competitions during the past thirty-six (36) months;
- Have satisfactory reports from Referees at these International Competitions;
- Attended an ISU course for International Officials within the past thirty-six (36) months;
- For Referees: have passed the appropriate examination during the past thirty-six (36) months;
- Must have been listed on the respective List of International Officials for at least two (2) consecutive years with a "W" indication, immediately prior to a promotion to the List of ISU Officials;

b) To be reconsidered as an ISU Official the individual shall maintain the following qualifications:

- Attend the ISU course for Officials conducted by the Short Track Speed Skating Technical Committee every two (2) years during the period of ninety (90) – hundred and twenty (120) days following a Congress. The date and venue of the course shall be communicated six (6) months in advance;
- Submit a report to the Short Track Speed Skating Technical Committee each time the individual serves as a Referee;
- Conduct an International Course for International Officials during the past twenty-four (24) months;
- Successfully completed the appropriate examination within the past twenty-four (24) months;

c) No person who has reached the age of seventy (70) years shall after the following July 1st be eligible to be a Referee, Starter or Competitors Steward in ISU Events and Olympic Winter Games;

d) The full list of Referees, Starters and Competitors Stewards approved by the Short Track Speed Skating Technical Committee shall be communicated to the ISU Members by the ISU Director General by August 1st every year.

Appointment of Officials

7. a) - The Officials are appointed in accordance with Rule 126, paragraphs 9 and 10 for the Olympic Winter Games and in accordance with Rule 129, paragraph 4 for the ISU Championships;

- The Referee, at least one but possibly several or all Assistant Referees, Starters and Competitors Stewards for each World Cup Competition shall be appointed by the President;

b) Appointed Officials must be invited by the organizing ISU Member not less than sixty (60) days before the start of the respective Competition;

c) At least three (3) qualified Officials, from other ISU Members than the ISU Member of the country in which the Competition is held, shall be among those appointed;

d) During ISU Events the maximum number of Officials (Referees, Starters and Competitors Stewards) per country that can officiate at the same time is four (4). In each category not more than half of the Officials can be of the same country;

e) For ISU Events and the Olympic Winter Games all Officials required (other than the Representative of Short Track Speed Skating Technical Committee and the Technical Delegate), not appointed by the President, shall be appointed by the ISU Member in which the Competition is held;

f) Any ISU Official who is appointed and/or invited for more than three (3) ISU Events in one season must inform the ISU Secretariat immediately and ask for approval;

g) For ISU Events and the Olympic Winter Games all Referees, Starters and Competitors Stewards must be selected from the current List of ISU Officials;

8. All activities of Officials shall be observed by the Short Track Speed Skating Technical Committee. In case of failure to comply with or observe a rule the Official will be subjected to a system for recommendation of sanctions and penalties. See the respective ISU Communication.

Rule 290

Officials necessary

1. a) For ISU Events and the Olympic Winter Games where ISU approved Video Replay services are available the following Officials are appointed by the President, subject to Rule 289 paragraph 7 : Referee, two (2) Assistant Referees, Assistant Referee Video, Starter per Category, two (2) Competitors Stewards. The following Officials are appointed by the Organizers: Heat Box Steward, Photo Finish Judge, Lap Scorer, Lap Recorder, Announcer and Track Stewards;

b) For ISU Events where ISU approved Video Replay services are not available the following officials are appointed by the President, subject to Rule 289 paragraph 7: Referee, four (4) Assistant Referees, Starter per Category, two (2) Competitors Stewards. The following Officials are appointed by the Organizers: Heat Box Steward, Photo Finish Judge, Lap Scorer, Lap Recorder, Announcer and Track Stewards;

c) For International Competitions with Photo Finish Equipment the following Officials are appointed by the Organizers: Referee, four (4) Assistant Referees, Starter(s), Competitors Steward(s), Heat Box Steward, Photo Finish Judge, Lap Scorer, Lap Recorder, Announcer and Track Stewards;

d) For International Competitions without Photo Finish Equipment the following Officials are appointed by the Organizers: Referee, four (4) Assistant Referees, Starter(s), Competitors Steward(s), Heat Box Steward, Chief Finish Line Judge, Finish Line Judges, Chief Timekeeper, Timekeepers, Lap Scorer, Lap Recorder, Announcer and Track Stewards.

Medical

2. A Medical Doctor and First Aid attendants must be in attendance.

Referee

3. The Referee shall be the chief executive officer, and shall decide all points of dispute and infringements of rules, which can result in sanctions. His decision shall be final (see Rules 123 and 124 about protests and appeals).

4. The Referee is responsible for:

a) Deciding the program and qualifying procedure in consultation with the Competitors Steward and the Representative of the Short Track Speed Skating Technical Committee;

b) See that all applicable rules be observed for the competition he is conducting;

c) In ISU Championships, to give information as to the preparation of the ice;

d) Reporting within thirty (30) days to the Short Track Speed Skating Technical Committee on the officiating at the Competition using the Report for ISU Events or the Report for International Competitions;

e) Conducting a Competition review meeting with all major Officials to evaluate all decisions and activities.

5. The Referee is empowered to:

a) Introduce alteration in the program in agreement with the ISU Representative and the Short Track Speed Skating Technical Committee Representative, in so far as these do not conflict with the Regulations;

b) Decide whether the conditions of the rink permits the holding of the Competition;

c) Accept, in agreement with the organizing ISU Member or affiliated club, another rink for the holding of the Competition;

d) If necessary, to exclude Skaters, coaches, Team leaders and other Team officials from the competition;

e) Remove the Starter, Competitors Steward or other Officials;

f) Suspend skating until order is restored when the public interrupts the competition or interferes with its orderly conduct;

g) Delegate responsibility to other Officials in order to assist him to carry out his duties;

h) Add a Skater who was in a qualifying position to the next round if he feels that the Skater was prevented from qualifying due to:

- an offense resulting in a sanction;
- any other reason not resulting from any direct or indirect action of the Skater concerned.

The Referee makes any advancement solely at his discretion;

i) The Referee, at his discretion, before a decision is made, decides to view the Video Replay System at full speed, slow motion or still picture, with the exception of matters concerning the starting procedure. When the Referee decides to view the Video Replay system due to a possible infringement and a penalty has been awarded, then the video footage concerning the infringement will also be shown on the screen in the stadium (if technically possible).

6. The Referee decides upon:

a) All protests made, and other matters in dispute, except those concerning the start (Rule 298), the make-up of races (Rule 296) and the order of finish (paragraphs 12 and 13).

Protests must be made to the Referee. All discussions concerning a protest will be held in private. All applicable paragraphs of Rule 123 shall apply;

b) All matters concerning any breaches of the Constitution and Regulations of the ISU, even though no protest has been made;

c) The Referee shall decide when a touch has been "obvious" in Relay racing and should observe all relaying for this particular purpose, with the assistance of the Assistant Referees.

Assistant Referee

7. a) The Assistant Referee appointed by the President as 1st Assistant will substitute in case the Referee is no longer able to do his job due to illness or injury;

b) The Assistant Referee(s) shall perform all duties and tasks as assigned by the Referee;

c) The Assistant Referee(s) must record their observations and must present their notes immediately after each Qualifying Round to the Referee.

Assistant Referee Video

8. a) Shall be located off the ice next to the Video Replay Operator;

b) Shall perform all duties and tasks as assigned by the Referee;

c) Shall observe the Video Replay System during all races and report his observations to the Referee;

d) Must record his observations and must present the notes immediately after each Qualifying Round to the Referee.

Starter

9. a) For ISU Championships and Olympic Winter Games a Starter shall be assigned per category. Changes can only be made by the Referee in consultation with the Representative of the Technical Committee or Technical Delegate;

b) The Starter shall decide all disputes relating to the start. He shall give his starting commands in English;

c) The Starter shall take his position, so that he has a clear view of all Skaters starting in the race;

d) In the Relay race, the Starter having been warned by the lap scorer, will fire the pistol signifying the last three (3) laps;

e) The Starter may designate another Starter to call the Skaters back in case of a false start.

Competitors Steward

10. a) The Competitors Steward is responsible for the coordination of all administrative matters and shall observe Rule 296 completely;

b) Checking the eligibility of Officials and Skaters;

c) Based on the results of the races the Competitors Steward shall, according to the official program, determine the Skaters taking part in the next Qualifying Round;

d) The Competitors Steward shall make-up the races for each Qualifying Round and draw the order of the races;

e) The Competitors Steward shall inform those Skaters of their qualification and the race in which they shall start.

Heat Box Steward

11. a) The Heat Box Steward shall work in a designated staging area called heat box;

b) The Heat Box Steward shall call out the names of those about to compete;

c) Skaters shall report to the Heat Box Steward before the start of each race and he shall be responsible for seeing that the Skaters are wearing their racing numbers and correct equipment (see Rule 291);

d) For ISU Events the Heat Box Steward must be listed on the ISU List of Referees for International Competitions.

Photo Finish Judge

12. a) The Photo Finish Judge shall read the photo finish. He shall report the order of finish and times of each Competitor to the Competitors Steward or electronic equipment recording the results of each race. The results shall be considered official.
This official may be the person operating the photo finish equipment described in Rule 280, paragraph 6;

b) For International Competitions photo finish equipment may be used in determining the order of finish of all Skaters;

c) The term photo finish equipment denotes a system that records the order of finish in such a way that it can be reproduced immediately after the race concerned. The

equipment must be able to reproduce a clear and undistorted photo of the finish of each race;

d) If the photo finish equipment is able to produce a time scale on the finish photo, the times read of this scale be taken as official times;

e) If it is not possible to record times with the photo finish equipment then electronic time keeping equipment, according to Rule 251, may be used to record the times of all Skaters.

Chief Finish Line Judge and Finish Line Judges

13. For International Competitions without photo finish equipment:

a) The official order of finish is determined by the Chief Finish Line Judge;

b) The order of all finishers shall be recorded;

c) The Chief Line Judge shall assign finish positions to the Finish Line Judges. The Chief Finish Line Judge shall pick first place only;

d) There shall be four (4) Finish Line Judges: Judge No. 1 picks Skaters 1st and 2nd; Judge No. 2 picks Skaters 2nd and 3rd; Judge No. 3 picks Skaters 3rd and 4th; and Judge No. 4 picks Skaters 4th and 5th;

e) In case of six or more Skaters, the Starter or his Assistant shall act as Judge No. 5 and pick 6th place only;

f) In the 3000 meters and relay races the Finish Line Judges will be assigned to a Skater or Team and record the number of laps skated and the place on the finish.

Chief Timekeeper and Timekeepers

14. For International Competitions without photo-finish equipment;

a) The Chief Timekeeper is responsible for the recording of times and shall comply with all sections of Rules 247 and 250 that apply to Short Track Speed Skating;

b) The Chief Timekeeper will ensure that he and the timekeepers are positioned off the ice and adjacent to the finish line necessary to record the accurate time of the Skaters;

c) When digital watches are used, the times will be recorded in hundredths of a second;

d) The Chief Timekeeper must read each watch, record the results, and declare the official time. He will warn the timekeepers not to clear their watches until he has ordered them to do so;

e) A minimum of two (2) Timekeepers plus one (1) reserve on first and second place and one (1) timekeeper on third position is required;

f) They will also pretest their watches in accordance with standard procedures;

g) The Timekeepers must not clear their watches until such time as they have been instructed by the Chief Timekeeper;

h) Timekeepers should not call out their times but if requested by the chief timekeeper show their watch.

Lap scorer

15. a) The Lap Scorer shall visibly show the number of laps still to be skated by the leading Skater at all times and he will turn the lap-board each time the leading Skater passes;

b) The Lap Scorer will ring the bell to signify the last lap of each race;

c) In Relay races the Lap Scorer will advise the Starter that the last three (3) laps are coming up;

d) In Relay races a Lap Scorer shall be assigned to each Team.

Lap Recorder

16. a) The Lap Recorder shall complete a lap by lap record in writing of the lap times of the leading Skater with an accuracy of one second or less and keep check on the Lap Scorer at all times;

b) The Lap Recorder shall be positioned off the ice but near the Lap Scorer.

Announcer

17. The announcer will keep the spectators fully informed throughout the competition. In addition, if requested by the Referee, he will announce sanctions specifying where and how the Skater(s) concerned made an infringement and whether there is an advancement.

The announcer shall also ensure that all Officials, Team leaders, Coaches and Skaters are kept fully informed by public announcements regarding competition details.

All announcements are in English. If applicable the same announcements may be made in a second language.

Track Stewards

18. A minimum of two (2) Track Stewards shall work at each end of the track. The Track Stewards must be experienced Skaters and have knowledge of the English language and have an understanding of the Short Track Speed Skating Rules. If possible the Track Steward should be positioned so that he will not interfere with the Skaters and Officials but can readily replace missing blocks.

On-ice Officials

19. a) Only the Referee, Assistant Referee(s) and Track Stewards may be on the ice during the running of the race;

b) On-ice Officials should be appropriately dressed and must wear speed skates;

c) Only with the permission of the Referee other Officials may be on the ice during a race, i. e. to operate equipment if necessary;

d) At ISU Events, Olympic Winter Games and Winter Youth Olympic Games the Referee and his Assistants shall use radio equipment and the ISU Race Report System (RRS) to communicate their observations provided this equipment is protected against third party intrusion.

Rule 291

Equipment of Skaters

1. All Skaters must be equipped with:

a) Safety type headgear that is in compliance with the current ASTM standard (American Society for Testing and Materials) for Short Track Speed Skating. The helmets must have a regular shape and may not have protrusions;

b) Gloves or mitts;

c) Shin protection;

d) Long sleeved and long legged clothing;

e) Padded or padded hard shell knee protection;

f) All speed skates must have the tubes closed and the blade ends must be rounded off, with a minimum radius of 10 mm. Blades must be fixed to the boot at a minimum of two (2) points with no moveable parts;

g) Neck protection <u>of cut-resistant nature, fully covering the neck</u>;

2. Each Skater is solely responsible that his personal equipment meets the highest safety criteria in order to obtain the utmost safety of the Skaters.

3. Further specification concerning the equipment described in paragraph 1), which may include enforcement of a world-wide accepted industry standard, may be issued by the ISU and shall then be announced in an ISU Communication or ISU Circular Letter. This applies only to ISU Events and the Olympic Winter Games. Use of equipment according to these specifications is recommended for International Competitions.

4. The Heat Box Steward in the heat box shall determine whether a Skater has respected the safety conditions, so that they can start a race. Skaters whose equipment is not in compliance with these rules shall be excluded from participation.

5. A Skater who removes his equipment before the end of the race shall receive a penalty. The loss of equipment beyond the control of the Skater, i.e. due to a fall, will not result in a penalty.

6. While competing, the Skater is not allowed to wear any technical communication equipment for the purpose of having contact with or receive information from other persons or sources. In case of violation the Skater shall receive a penalty.

7. Only with the approval of the ISU a system using signals from a transmitter or similar equipment, worn by the Skaters may be used at ISU Events to record information for the public, media and officials. The equipment must be worn as instructed. Failure to do so will result in a penalty.

Rule 292

World Records

1. a) World Records will be registered by the ISU. The ISU Council will only recognize as World Records times skated in ISU Events (ISU Championships, ISU World Cup Competitions and other Events specifically designated "ISU" by the ISU as well as the Olympic Winter Games for the following distances and under the following conditions:

- For Ladies over distances of 500, 1000, 1500 and 3000 meters;
- For Men over distances of 500, 1000, 1500 and 3000 meters;
- For Junior Ladies over distances of 500, 1000 and 1500 meters;
- For Junior Men over distances of 500, 1000 and 1500 meters;
- For Ladies Teams over distances of 3000 meters Relay;
- For Men Teams over distances of 3000 meters Relay and 5000 meters Relay;

b) World Records will be considered in thousands of seconds provided such times have been established:

- on an official ISU track as listed in Rule 280, paragraph 1;
- that photo finish and/or electronic timing has been used, proved by original outputs of the respective equipment;
- an ISU Referee and Starter are officiating;
- that lap record times were duly recorded for distance of 1500 meters or over;
- that the distances skated and the starting times were in accordance with the announcement;
- that the original official ISU Protocol of the competition, together with certificates regarding the watches and track and a program of the competition are available;

c) Junior World Records can only be accepted provided these times have been established in a competition open only to Juniors;

d) Any Competitor who achieves a World Record time must have been tested for doping control and have tested negative on the day of the race in order to have the World Record ratified;

e) If the existing World Record is broken more than once on the same distance in a competition only the best time obtained shall be considered as a World Record;

f) Any Competitor who equals an existing World Record shall have his name entered in the list of records;

g) For each record obtained, or the equaling of any record, the ISU shall issue a diploma to the Skater;

h) All respective documents must be submitted by the organizing committee to the ISU Director General within thirty (30) days following the competition.

Rule 293 Reserved

IV. TECHNICAL RULES SHORT TRACK SPEED SKATING

A. Races

Rule 294

Type of races

1. Short Track Speed Skating competitions consist of races with mass start:
   a) Individual races;
   b) Relay races.

2. For ISU Events, the Olympic Winter Games and the Winter Youth Olympic Games progression on each distance from first round to the Finals will be by elimination.

3. For Ranking Finals at ISU Championships and for International Competitions, an All Finals system may be used, in which all Skaters qualify for final races in different levels.

B. Definitions

Rule 295

General conditions/Definitions

1. a) Race: See ISU Constitution Article 38;
   b) Qualifying Rounds: See ISU Constitution Article 38;
   c) Ranking Finals: one (1) Round to determine the Ranking of Skaters excluded in the elimination process;
   d) Competition: See ISU Constitution Article 38;
   e) Coach/Team leader/support staff: eligible persons appointed by the respective ISU Member to support and represent the Skater/Team of the Member;
   f) The "Field of Play" during Short Track Speed Skating competitions are the ice surface, the immediate surroundings, heatbox, coachesbox, Officials restricted area and any other so designated areas;
   g) During each Qualifying Round there shall be allowed only one person per participating Skater in the designated coaching area.

Program

2. a) Individual races are held over 500, 1000, 1500 and 3000 meters. With approval of the Technical Committee, races may also be held over other distances;
   b) Short distances: 500 and 1000 meters;
      Long distances: 1500 and 3000 meters;
   c) Relay races will be held as follows:
      Ladies 3000 meters;
      Men 5000 meters;

For International Competitions Relay races for Men may also be held over 3000 meters;

d) Names of the Qualifying Rounds depend on the number of rounds and will be:

1 : Final(s)

2 : heats, Final(s)

3 : heats, Semi-Finals, Final(s)

4 : heats, Quarter-Finals, Semi-Finals, Final(s)

5 : preliminaries, heats, Quarter-Finals, Semi-Finals, Final(s)

6 : pre-preliminaries, preliminaries, heats, Quarter-Finals, Semi-Finals, Final(s)

7 : pre-preliminaries, preliminaries, heats, eight-finals, Quarter-Finals, Semi-Finals, Final(s) ;

e) The number of Skaters per race at ISU Events is limited and must be scheduled as follows:

	500 m	1000 m	1500 m
Quarter-Finals	5	5	
Semi-Finals	4	5	7
Finals	4	4	6

For exception see Rule 290, paragraph 5. See Rule 281, paragraph 4, and Rule 285, paragraph 4, for the 3000 meters Super-Final. See Rule 283, paragraph 4, for the 1500 meters Super-Final. These Super-Finals are non-medal races;

The number of Skaters per race at the Olympic Winter Games is limited and is scheduled as follows:

	500 m	1000 m	1500 m
Quarter-Finals	4	4	
Semi-Finals	4	4	6
Finals	4	4	6

For competitions held according to Rule 287 other numbers of Skaters per Race may be used;

f) Race winners and second placed Skaters in the races will move forward to the next round. The fastest thirds may be used if there are an odd number of Competitors. For World Cup Competitions, Skaters may also qualify through a repechage process;

g) For the Finals A and B the Skaters qualify from the Semi-Finals according to Rule 295, paragraph 2;

h) For ISU Championships, Olympic Winter Games and Winter Youth Olympic Games a Final B with one (1) Skater/Relay Team will not be skated and the qualified Skater/Relay Team will be assigned the first finish position for this race.

For World Cup Competitions a Final B with two (2) or less Skaters will not be skated and the qualified Skaters will be assigned the first finish position for this race.

For World Cup Competitions a Final B with one (1) Relay Team will not be skated and the qualified Team will be assigned the first finish position for this race;

i) Depending on the number of entries for World Cup Competitions it is also possible that during the Qualifying and Repechage Sessions only race winners will move forward to the next round. The fastest seconds may be used if there is an odd number of Competitors;

j) During World Cup Competitions the Host Country may enter one (1) Skater, subject to approval by the Technical Committee, on each of the individual distances in each category in the World Cup session, except during World Cup Competitions designated for Olympic Qualification;

k) Competitors shall be allowed a minimum rest of fifteen (15) minutes between races;

l) If the track markers are not placed on corresponding tracks the times from the respective race shall not be recorded and if fastest third place Skaters qualify from the respective round the Skater(s) concerned shall be advanced and the regular qualifying number of fastest thirds will be taken from the remaining third place finishers.

Announcement

3. a) For the Announcement of ISU Events see Rule 129, for International Competitions see Rule 110 and for Olympic Winter Games see Rule 126. The announcement should also contain supplementary items, see Rule 112;

b) The conditions of contest shall be set out in the published program.

Entries

4. a) Entries for ISU Events can be made only through the respective ISU Members;

b) ENTRIES: The number of Competitors, substitutes, coaches and Team leaders shall be entered at least six (6) weeks before the first day of the Competition. The number of other personnel traveling with the Team shall also be communicated separately at least six (6) weeks before the ISU Event concerned. ISU Members are seriously requested to enter only the number of Skaters they actually intend to send to the ISU Event concerned;

c) FINAL ENTRIES: At the latest on the fifth (5th) day before the start of the first race of the Competition the following information must be communicated to the organizing committee:

- Names of the Competitors and substitute names per category with their International Registration Numbers;
- Names of the Competitors for each of the respective individual distances, if applicable;
- Confirmation of participation in the Relay, if applicable;

d) The date and time of arrival and departure of competitors and those accompanying them shall be included when sending in the Final Entries;

e) For post entries Rule 115, paragraph 6 of the General Regulations applies;

f) The names of the Competitors for each of the respective individual distances, if applicable, shall be communicated to the Competitors Steward at the latest at 18:00 hours in the evening two (2) days before the start of the first race of the Competition;

g) The Seeding list of Participants in order of their Ranking, fastest Time (see Rule 286, paragraph 9 a), b) and c) or Results of a Draw (see Rule 286, paragraph 9 d) shall be published at the latest at 15h00 on the day before the start of the first race of the Competition;

h) Any comments regarding the Seeding list of Participants, Qualifying Schedule and other distributed official documents can be addressed to the Competitors Steward up to 18h00 hours on the day before the start of the first race of the Competition;

i) The Make-up of the Races will be published three (3) hours before the start of the first race of the respective distance/category;

j) Competitors must be present at the site of the ISU Event at 18:00 hours on the day before the start of the first race of the Competition, or the Organizing Committee must confirm their arrival in the city of the ISU Event concerned;

k) Any financial requirements imposed by the Organizing Committee for making on-site arrangements shall be communicated in the Announcement.

Points and classifications

5. a) Final Points will be awarded in the Finals A and B only. The points 34, 21, 13, 8, 5, 3, 2 and 1 are awarded in descending order commencing with the first place in Final A and after all places in Final A have been awarded, the remaining points will be awarded to the Final B in descending order starting with the first place;

b) In the case of a penalty or did not finish in the Final A, the Skater(s) concerned will be awarded a number of points equal to the winner of the Final B.
In the case of a penalty in the Final B, the Skater(s) concerned will not be awarded any points;

c) Skater(s) who are declared finished by the Referee will be assigned the corresponding number of points.

d) <u>No points will be awarded to Skater(s) who did not start, received a yellow card or received a red card</u>;

e) In the case of a tie, all Skaters involved in a tie will receive the points awarded for that finish position (e.g. tie on 2nd both Skaters will receive 21 pts). If two (2) Skaters are involved in a tie, the points for the following finish place will not be awarded, in the case of three (3) Skaters involved, the following two (2) finish places will not be awarded.

6. For each distance a classification will be made in which the participants are ranked:

- <u>by block;</u>
  - <u>for Olympic Winter Games: Finalists, Semi-Finalists, Quarter-Finalists, etc;</u>
  - <u>for ISU Events: Final A, Final B, Semi-Finalists, Quarter-Finalists, etc.;</u>
- <u>for all other events: following the Qualification Schedule;</u>
- by position (finish place) within the respective <u>block</u>;
- by position (finish place) within the subsequent previous Qualifying Rounds;
- by best time <u>skated</u> in any race over the distance;
- further ties will not be broken for <u>completed Distance Classifications</u>.

For any intermediate <u>Distance</u> classifications:

- in the case of equal times over the distance, a draw will take place to establish the order;

- in the case where there are no time(s) available, a draw will take place for the respective Skaters/Teams to determine their rank in comparison to the others with the same position (finish place).

7. For the Super-Final over 3000m, the classification will be made as follows:
With nineteen (19) laps to go, there will be a bell, the first Skater crossing the line with eighteen (18) laps to go will get five (5) Race Points.
With ten (10) laps to go, there will be a bell, the first Skater crossing the line with nine (9) laps to go will get five (5) Race Points.
If the Skater(s) concerned receives a penalty, a yellow card, a red card, or does not finish, then those Race Points are not awarded to any other Skater(s).
At the finish 34, 21, 13, 8, 5, 3, 2 and 1 Race Points are awarded in descending order commencing with the first place.
The Race Points for intermediary sprints and the Race Points for finish order will be added to make the 3000m classification.
For the 3000m Super-Final Distance Classification the Skaters will be ranked:

- by Race Points
- by Finish position

Final Points will be awarded according to the 3000m Super-Final Distance Classification. The Points 34, 21, 13, 8, 5, 3, 2 and 1 point are awarded in descending order commencing with the first place.

8. Skaters or Relay Teams who

- received a penalty, did not start or failed to finish, in the first round, or
- received a yellow card or red card in any round,

will not be ranked but listed as participants.
Only for the purpose of calculating an overall classification these Skaters or Relay Teams get a virtual ranking equivalent to the number of Skaters or Relay Teams, on that distance, plus 1.

9. For the Final Classification (and any intermediate overall classification) the Skaters are ranked:

- by total number of Final Points;
- by position (finish place) in the Super Final;
- by combined ranking over all Distance Classifications;
- by the highest ranking achieved in one of the distances and subsequent other best rankings;
- by best time over the longest distance on the program.

10. For the purpose of making up the first Qualifying Round at any ISU Event, World Ranking Lists shall be maintained over all individual distances, combined individual distances and Relay. See Rule 286, paragraph 9.

11. a) Teams consist of four (4) or five (5) Skaters, which are all considered as participants. During any Relay race in a competition, a maximum of four (4) shall compete. Entries of Teams with less than Four (4) or more than five (5) Skaters shall not be accepted;

b) The names of substitutes corresponding with the number of ordinary entries may be entered;

c) All Skaters of a Team must belong to one and the same ISU Member. At specified competitions, Teams may be composed by Skaters from different ISU Members with the approval of the ISU.

Uniforms

12. During ISU Events and the Olympic Winter Games all Skaters, members of the same national Team (individual and Relay) must wear identical uniforms. The racing uniforms shall show on the external part of both lower legs the name of the country or the official abbreviation. The size of the characters not to be smaller than 5 cm high. The racing uniforms and the warming-up uniforms may show the name of the Skater. See the respective ISU Communication.

Helmet-Covers

13. a) Helmet-covers, supplied by the ISU or Organizers of ISU Events and the Olympic Winter Games, clearly mentioning the Skaters number in contrasting colors, must be worn; Helmet-covers used at ISU Events must be approved by the ISU Technical Committee Representative.
If NO helmet-covers are supplied the Skaters may display artistic design on their helmets. Further requirements will be specified in an ISU Communication.

b) After each distance of an ISU Championship the organizers will supply to the Skater having attained the highest total of Final Points a helmet cover with a contrasting color. If a tie exists then the Skater with the higher rank (see Rule 295, paragraph 9) will carry this special helmet cover.

Rule 296

Drawing and seeding procedures

1. A draw shall take place to establish the starting order of each race.

2. For ISU Events and the Olympic Winter Games the composition of the first Qualifying Round of the first distance, both individual and Relay, is made up by the Competitors Steward in consultation with the Referee and the Representative of the Short Track Speed Skating Technical Committee in accordance with the respective World Ranking (see Rule 286).

3. a) The composition of the races in each Qualifying Round is based on a Seeding List of all Skaters;

b) For Competitions over Single Distances, i.e. Olympic Winter Games and World Cup Competitions the current World Ranking List per Distance will be used as Seeding List for the first Qualifying Round. For all other Qualifying Rounds the current distance classification will be used;

c) For All Round competitions where each distance is concluded with the Final before any race of the next distance is skated, the current Overall World Ranking List will be used as Seeding List for the first round of the first distance. For all other Qualifying Rounds the current overall classification according to Rule 295 paragraph 9, based on the results of all distances including the current distance, will be used as Seeding List;

d) For All Round competitions where Qualifying Rounds over multiple distances are skated before the Final of the first distance, the World Ranking List per Distance will be used as Seeding List for the first Qualifying Round.
For the Qualifying Rounds, other than the first Qualifying Round, which are scheduled before the final of the first distance and for the Ranking Finals, the Distance Classification will be used as Seeding List.
For the other Qualifying Rounds the current overall classification according to Rule 295 paragraph 9, based on the results of all distances including the current distance, will be used as Seeding List;

e) The unranked Skaters will be given a ranking by means of a Draw, conducted by the Competitors Steward.

4. The composition of the races in each Qualifying Round shall be made by the Competitors Steward by placing the Skaters in the races by means of the Skaters current ranking in the Seeding List, e.g. the number one (1) ranked Skater will be placed in the first race, the number two (2) ranked Skater will be placed in the second race etc., filling the races from the first race to the last race in the first instance. The second row, i.e. the second Skater in each race, will be filled from the last race to the first race. The next rows will be filled alternating from the first race to the last race, and from the last race to the first race until all Skaters have been placed.

5. Except for Quarter-Finals and Semi-Finals: If any Skater is to be placed in a race which contains a Skater from the same country, that Skater will be moved to the next available race, unless the Skater would be placed in a race on the next row. In that case the Skater will be exchanged with the previously placed Skater, or with his predecessors on the same row, if necessary to avoid placement of Skaters of the same country in a race. If there are no more races available to move a Skater to, then the Competitors Steward, with the approval of the Referee, may reverse Skaters on a previous line, but only within that line, commencing with the lowest ranked, to solve the matter. Reversing Skaters between lines is not allowed. If the matter cannot be solved then the Skater will be placed in the originally designated race.

6. The Competitors Steward will draw the starting order for all races immediately after the make-up of the round is completed.

7. The composition of the Ranking Finals over each distance is made by the Competitors Stewards by placing the Skaters in the Ranking Finals in the order of the distance classification. The number of Skaters per race is according to the Qualifying Tables published by the Technical Committee.
The highest ranked Skaters will be in the last Ranking Final, the next highest ranked Skaters will be in the second last Ranking Final, etc. Ranking Finals with one (1) Skater will not be skated;

8. The lane positions of the first Qualifying Round of a distance will be drawn by the Competitors Steward.
For each subsequent round the lane positions will not be drawn but be decided by the times skated in the preceding Qualifying Round. The Skaters/Relay Teams will be assigned the lane positions from the inside of the track to the outside in the order of their times commencing with the fastest time, in the following order:

a) In the case that no time in the previous round is available for a Skater/Relay Team due to failure of technical equipment or incorrect placement of blocks, then the best time in any race in this competition over the distance concerned will be taken to determine the lane position in accordance with sub-paragraph c) below.
b) If no times are available at all then a draw for lane positions shall take place first for any Skaters/Relay Teams without a time.
c) Following the Skaters/Relay Teams with a time will be assigned their position according to the times.
d) In the case that no time in the previous round is available due to being declared finished without a time, the Skater/Relay Team concerned will be assigned a starting position after the preceeding Skaters/Relay Teams.
e) After determining the start positions of the above Skaters, any Skater qualified through a wild card will be placed next.
f) Skaters who qualified through a Repechage will be assigned a starting position after the preceeding Skaters/Relay Teams.
g) In the case that two (2) or more Skaters/Relay Teams have the same time, then the best time in any race in this competition over the distance concerned will be taken to determine the order in which the respective Skaters/Relay Teams will be assigned a lane position.

C. Racing Rules

Rule 297
Individual racing rules

1. a) Races are run counter-clockwise, that is to say the inner side of the track is on the left hand side of the Skater/Relay Team;

b) Overtaking is allowed at all times, but until the Skaters/Relay Teams are besides each other the responsibility for any obstruction or collision shall be upon the

Skater/Relay Team overtaking, provided the Skater/Relay Team being overtaken does not act improperly;

c) When a Skater/Relay Team has been lapped once the Skater/Relay Team may continue his race, preferably on the outside of the track, provided this does not interfere with nor impedes other competitors;

d) If a Skater/Relay Team is lapped twice, that Skater/Relay Team shall leave the race unless there are one (1) or more other Skaters/Relay Teams very close to his current race position. Skaters/Relay Teams who have left the race on basis of this rule shall be recorded as not finished. If the Referee, at his discretion, feels that the Skater/Relay Team was prevented from finishing due to reasons beyond the Skaters/Relay Teams control, then the Referee may declare the Skater/Relay Team having reached the finish but no time shall be recorded;

e) A Skater/Relay Team has completed the distance when the Skater has reached the finish line with the leading tip of the skate blade.

Infringements

2. a) The general racing rule is that the Skaters/Relay Teams by their way of skating shall contribute to the honest sporting and safe progress of the race in order to determine the result of the race on its merits;

b) Breaches of the racing rules are considered as follows:

- OFF-TRACK: Shortening the distance to be skated with one or both skates on the left side of the curve, marked by track marking blocks;
- IMPEDING: Impeding, blocking, charging, or pushing another Skater with any part of the body. Interfere with another Skater by crossing his/her course thereby causing contact;
- ASSISTANCE: Each Skater shall compete as an individual. Any assistance from other Skaters will be cause for sanctions of all Skaters/Relay Teams involved. This will not apply to the push the Skater receives from their Team-mate in a Relay race.
- KICKING OUT: Kicking out of any skate during any part of a race thereby causing danger including at the finish line or throwing the body across the finish line is forbidden.

Relay racing rules

3. a) Teams consist of maximum of the following number of Competitors:

World Championships	5
World Junior Championships	4
European Championships	5
World Cup Competitions	see World Cup Communication
All other Competitions	5

For each race any four (4) of the named Skaters must take part in the race;

b) All members of a Team shall be equally dressed. Teams which do not comply with this shall be excluded from participation. <u>For Competitions where Skaters from different nations form a team, a simple and easy identification system will be sufficient</u>;

c) A Skater will be in the race and be responsible for the Team until that Skater is relayed by a Team member. Relaying will be by touch, that is to say a Skater will not be in the race until that Skater has been touched by, or has touched the Skater he is relieving;

d) A Skater may be relayed at any time except during the last two (2) laps. These laps must be skated by one Skater. A warning shot will be fired to indicate the start of the last three (3) laps;

e) In the case of a fall during the last two (2) laps, the Skater may be relayed.

Relay infringements

4. a) The individual racing rules, paragraphs 1 and 2, shall apply to Relay races, that is to say for all members of the Team, both participating and relayed Team members;

b) Breaches of the relay racing rules are considered as follows:

- RELAYING NON TOUCH: The relay has taken place without a touch or that the touch has not been obvious, clearly shown, and seen by the Referee or Assistant Referees;
- RELAYING DURING THE LAST TWO (2) LAPS: The last relay has not been clearly started before the commencement of the final two (2) laps.

Sanctions for infringements of the Racing Rules or the ISU Code of Ethics

5. a) The term "disqualification" as used in Rule 123 paragraph 4 c). shall be understood to describe the various sanctions mentioned in this Rule including without limitation the following type of sanctions:

i) PENALTY: In the case of an infringement of the Racing Rules a penalty will be given by the Referee. With the exception of Final A, where Rule 295, paragraph 5 b) applies, the Skater/Relay Team will be disqualified in the relevant race in which the infringement occurred, and will be excluded from participating in the next round of the distance concerned. The Skater/Relay Team will forfeit the points/result accrued in that race alone, for Final A of ISU Championships, please refer to Rule 295, paragraph 5 b). Points/results accrued prior to that race will not be affected.

<u>If in a race more than one infringements of the Racing Rule "Impeding" and/or "Kicking Out" are made by one and the same Skater/Relay Team, that are independent of each other, and each resulting in a penalty, the Referee will give the Skater/Relay Team concerned a Yellow Card.</u>

ii) YELLOW CARD: If an infringement of the Racing Rules is deemed by the Referee to be an unsafe, harmful or hazardous offense, a yellow card will be shown to the infringing Skater. The Skater/Relay Team will be disqualified in the relevant race in which the infringement occurred and excluded from participating in the next round of the distance concerned. The Skater/Relay Team will forfeit prior points/results accrued in all races over the distance concerned.

Any Skater who is shown the Yellow Card twice in the same Competition will be sanctioned by a Red Card, will be excluded from the Competition immediately and will not be ranked in the final classification.

A Yellow Card given to a Relay Team is not cumulative to any Yellow Card given to an individual Skater and vice versa.

iii) RED CARD:

1) If an infringement of the Racing Rules is deemed to be dangerous or grossly negligent or a violation of the ISU Code of Ethics happens in the period between the appearance of a Skater at the Heat Box In and leaving the Heat Box Out after a race, the Referee will show the Skater a Red Card. The Skater will be disqualified from the Competition, including the Relay race, and will not be ranked in the final individual classification. If a member of a Relay team receives a Red Card during the Relay race, the Relay team is disqualified and will not be ranked in the final Relay classification. The respective Skater is excluded from the Competition and will not be ranked in the final individual classification. The Skater/Relay team will forfeit prior points/results accrued in all races of the Competition.

2) In the case a Skater is shown two (2) Yellow Cards in the same Competition, the Skater will be shown a Red Card.

3) A Red Card may also be shown to the Skater for any action and behavior, either on or off ice during the event period, i.e. the beginning and the end of an event as established by the ruling body of the event, which is considered by the Referee as

i) non-compliance with instructions of an official in charge,

ii) a violation of the ISU Code of Ethics.

Any Official or other participant in an ISU activity witnessing a violation of the Code of Ethics during the event period needs to verbally report to the Referee. The Referee shall file a written report with the Short Track Speed Skating Technical Committee concerning any Skater who is shown a Red Card or a Yellow Card. The Short Track Speed Skating Technical Committee shall forward this information to the Sports Director who will inform the Council. The Short Track Speed Skating Technical Committee shall create a database of all Yellow and Red Cards issued during a skating season. Irrespective of the Red Card decision of the Referee, any Skater falls under the disciplinary authority of the Disciplinary Commission at any given moment and is subject to a sanction imposed by the DC.

If a Skater has accumulated two (2) Red Cards within 12 months, that Skater shall be automatically suspended from all ISU Events, the Olympic Winter Games, and International Competitions for at least two (2) months or three (3) applicable competitions whichever is the longer period.

b) The Referee’s decision that: (i) there was an infringement of the Racing Rules or ISU Code of Ethics or (ii) decisions approving the announcement of the results showing that there was no infringement are final and no protests against such decisions are allowed (See Rule 123, paragraph 4 c) ;

c) If in the opinion of the Referee and his Assistants, the Skaters are "not racing" they shall stop the race, declare "no contest" and may give a penalty to Competitor(s) ;

d) If, during a race, any irregularity that may affect the result does take place, the Referee may stop the race and order an immediate re-start of the race. If the distance has been completed the Referee may order a re-run of the race after respecting the rest time

according to Rule 295, paragraph 2). If any of the Skaters/Relay Teams have been sanctioned under this Rule for conduct occurring before the race is stopped then such Skater(s), and the Skater's Relay Team (if the race is a Relay race), will not take part in the re-run;

e) Any Skater, for whom the race has been stopped (to preserve the Skater's well-being), will not be allowed to take part in the re-start, unless the Skater was unable to continue due to reasons beyond his control. This does not apply to the starting procedure. The results of Skater(s) excluded for this reason from a re-start will show 'no finish'. This also applies to Relay Teams.

f) Sanctions imposed by the Referee under this Rule are communicated at the end of each race to the Competitors Steward by specifying the helmet number, digit by digit, plus the country of the Skater. The Competitors Steward reports his recordings back to the Referee who reconfirms the decision. The recorded decision is the final decision and cannot be changed unless there is a recording, technical, data or communication error. The corrections have to be made before the next qualifying round. Any correction must be officially announced and documented.

Sanctions are announced at the end of each race before the announcement of the official results, to the Skater(s)/ Team Coach or Team leader, and over the public address system for the benefit of the spectators, specifying where and how the Skater(s)/Relay Team concerned made an infringement and whether there is an advancement.

If the public address system can be understood loud and clear at the Coaches Box, or the information is immediately available on a screen or any other communication device, then there is no need for any On Ice Official to go to the Coaches Box to announce the decision(s).

In the case of a violation of the ISU Code of Ethics, either on or off the ice, within the event period, the sanction may be announced also at a later stage and the consequences as indicated above in paragraph 5.a) iii 1) will apply.

Sanctions for Coaches, Team leaders and Support staff

6. Coaches, Team leaders and Support staff are subject to the conditions of the General Regulations. Failure to observe these Rules and/or misconduct as per paragraph 5.a) iii) 3) i) and ii) above can result in the following sanctions:

Yellow Card: suspension from the Field of Play for the day.

Red Card: suspension from the Event/Competition with removal of the accreditation.

Rule 298

Heat Box

1. a) The Heatbox is a designated area where the Skaters must report when called and stay before their Race. Depending on the Qualifying Round this designated area may be different;

b) Previous to each start the names of those about to compete are to be clearly called at the heat box. Any Skater who fails to appear promptly is excluded from the race, is excluded from all remaining races and/or distances of the competition and is removed from the final classification, except for Medical Examination and/or Medical

Treatment. These medical reasons must be confirmed by a medical doctor's certificate and presented to the Referee before the race is being called;

c) Skaters who do not arrive will be recorded as “Did not Start” ;

d) Skaters with defective equipment (e.g. broken Skate blade) will not be allowed to start or re-start;

e) Skaters have to go on the ice through the heat box only. Skaters who do not go through the heat box will receive a penalty and are excluded from the race.

Starting equipment

2. Instead of an ordinary start revolver an electronic start pistol may be used. In this case the following conditions should be observed:

a) The electronic pistol should have a firm trigger point;

b) The synthetic sound at the “firing of the gun” should be loud and distinct, and similar to the sound of the shot from an ordinary start revolver;

c) The smoke fire must be replaced with a visual flash, which must be distinctly different from a photoflash.

Lane Positions

3. If more than five (5) Skaters are starting in a race, the starting dots will not be used, and the Starter will direct the Skaters in the respective order of their position to the starting line.

If due to the number of Skaters in a race a second row is required at the start then the Skaters at this line will be positioned as far as possible to the outside of the track in the order of the lane positions.

Starting procedure

4. Once the Referee is satisfied that all necessary arrangements for the race to come have been taken, he will inform the Starter.

5. a) The Starter will blow the whistle;

b) From this moment the Skaters have a limited time to come to the start line. This time may be displayed using technical equipment. Also starting from this moment the Announcer will end his comments and no music may be played;

c) The set time to go to the start line will be decided annually by the Technical Committee and announced at the Opening Meeting the day prior the start of each Event;

d) Any Skater who arrives at the start line after the limited time will be warned by the Starter. The announcement should be:

- The lane position of the Skater who made the offence
- “Warning”
- “Delay”;

e) Any warnings for delays do not affect the other Skaters on the starting line;

f) in the case of a false start or a second warning to a Skater who has already received a warning the Starter shall tell the Skater that he gets a penalty.

6. a) The skaters will line up a short distance away from the start line;

b) In the case of a Semi-Final or Final Race where the Skaters are being introduced individually by the Announcer, they will position themselves a little further away from the start line and when introduced by the Announcer they will move forward closer to the start line;

c) Prior to the start of each Semi-Final over an individual distance, the participants are introduced by the announcer stating their full name and country;

d) Prior to the start of a Final over an individual distance, the participants are introduced by the announcer stating their full name, country, and other information for the interest of the public.

7. a) The starter will command:

- "Go to the Start";

b) On this command the Skaters move forward to the start line and place themselves at their respective dot at the start line. The Skaters stand up straight and stand still;

c) Until the Skater has finalized his still position, touching the Start line is not an offence;

d) Putting the tip of the blade in the ice is an offence and a false start will be given to the Skater concerned;

e) The announcement of the Starter should be:

- The lane position of the Skater who made the offence
- "False Start"
- "Wrong Blade Position";

8. a) The starter will command:

- "Ready";

b) The Skaters will go down and take their final starting positions immediately with the center of the body over the respective dot and keep this position;

c) It is a false start when the Skater:

- Places one or both skates on or over the start line
- Places one or both hands on the ice
- Does not have both skates on the ice, i.e. full contact over the length of the blades.
- Takes his starting position before the command "ready"
- Takes his starting position too slow after the command "ready";

9. a) When all Skaters are positioned in their final starting position and are still, i.e. there is no more movement, the Starter will wait a defined period of time and then fire the gun;

b) It is a false start when the Skater:

- Moves before the gun is fired
- Slides on or over the line
- Moves forward on the tip of his blades;

c) In the case of a false start the Starter will fire the gun again and/or uses the whistle to call the Skaters back;

d) The Skaters must return to the start line without delay. Any Skater who does not return directly to the start line will receive a warning for delaying the start;

e) If more than one (1) Skater is responsible for a false start, the concerned Skaters shall all be assessed a false start;

f) If one (1) of the Skaters breaks from his marks, thereby causing another Skater to follow him, only the Skater at fault shall be assessed a false start;

g) If one of the Skaters makes noise e.g. with his skates on the ice, thereby causing another Skater to move shall be assessed a false start;

h) Commands given by the Starter will include:

- The lane position of the Skater who made the offence
- "False Start"

And if necessary any statement reasoning the false start, e.g.:

- Moving
- Wrong blade position
- Wrong blade movement;

i) If more than one (1) Skater made an offence all the preceding points will be repeated;

j) If there are multiple offences of the Starting Rule then these will be announced in the order they occurred.

10. a) If a false start was made by a Skater who had already received a warning, this Skater will receive a penalty and is excluded;

b) The announcement of an exclusion will be made:

- The lane position of the Skater who made the offence
- "Penalty";

c) On direction of the Referee the Skater may be sent off the ice.

11. a) After the first false start of a race the Starter will warn all Skaters:

- "This race has one false start";

b) In the case of a second false start by any of the Skaters, the Skater(s) concerned will be given a penalty and is/are excluded from the race;

c) The announcement of an exclusion will be made:

- The lane position of the Skater who made the offence
- "Penalty" ;

d) On direction of the Referee the Skater may be sent off the ice.

12. If a Skater is interfered with and falls before the first apex block after the starting line the Skaters shall be called back to start again. The decision whether the interference is an offence according to the Racing Rules is a decision of the Referee.

13. Before a start, the equipment of the Skater may be fixed, without leaving the ice. At "Go to the Start" the Skaters must be fully prepared with all equipment in order. Any omission will be a 'Warning for delaying the start '(see above).
If the Skater:

- received a warning before, or
- the race has a false start, or
- a repeated offence is made,

the Skater at fault will be given a Penalty.

End of Race

14. a) The end of the race is declared by the Referee. Different means can be used to communicate that information to the Skaters and all Officials. Except for Finals : Any Skater who has not yet finished will be declared finished by the Referee, but no time will be assigned;

b) After the end of the race there is a limited time to leave the ice. This time may be illustrated by technical equipment.

Rule 299 Reserved

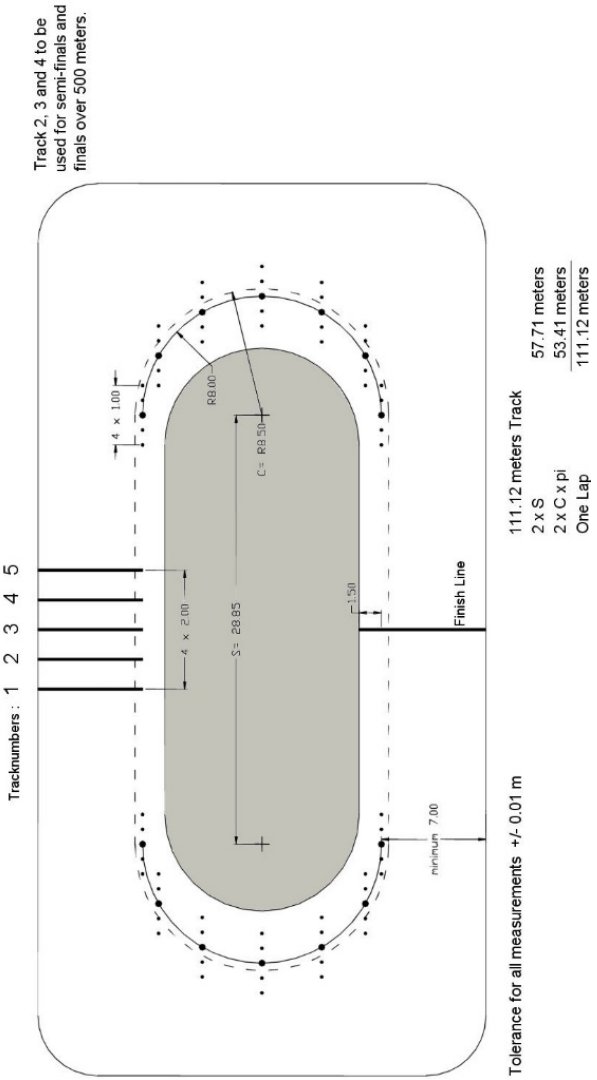

Laps in different distances:	500 m	=	4½	laps
	1000 m	=	9	laps
	1500 m	=	13½	laps
	3000 m	=	27	laps
	5000 m	=	45	laps

INTERNATIONAL SKATING UNION

Founded: July 23rd, 1892, at Scheveningen (Netherlands)

ISU MEMBERS

AND	**Andorra**	Federacio Andorrana d'Esports de Gel (Figure)
ARG	**Argentina**	Argentine Ice Speed Skaters Union (UVEPA) (Speed) Federacion Argentina de Patinaje Sobre Hielo (Figure)
ARM	**Armenia**	Figure Skating Federation of Armenia (Figure)
AUS	**Australia**	Australian Ice Racing Inc. (Speed) Ice Skating Australia Incorporated (Figure)
AUT	**Austria**	Österreichischer Eisschnelllauf Verband (Speed) Österreichischer Eiskunstlauf Verband (Figure)
AZE	**Azerbaijan**	The Skating Federation of Azerbaijan Republic (Figure)
BLR	**Belarus**	Skating Union of Belarus
BEL	**Belgium**	Fédération Royale Belge de Patinage de Vitesse (Speed) Fédération Royale Belge de Patinage Artistique (Figure)
BIH	**Bosnia and Herzegovina**	Skating Federation of Bosnia and Herzegovina
BRA	**Brazil**	Brazilian Ice Sports Federation (Figure)
BUL	**Bulgaria**	Bulgarian Skating Federation
CAN	**Canada**	Speed Skating Canada (Speed) Skate Canada (Figure)
CHN	**China**	Chinese Skating Association
TPE	**Chinese Taipei**	Chinese Taipei Skating Union
COL	**Colombia**	Federacion Colombiana de Patinaje (Provisional Member Speed)
CRO	**Croatia**	Croatian Skating Federation
CYP	**Cyprus**	Cyprus Skating Federation (Figure)
CZE	**Czech Republic**	Czech Speed Skating Federation (Speed) Czech Figure Skating Association (Figure)
DEN	**Denmark**	Dansk Skøjte Union
PRK	**D.P.R. Korea**	Skating Association of the Democratic People's Republic of Korea
EST	**Estonia**	The Estonian Skating Union
FIN	**Finland**	Suomen Luisteluliitto (Speed) Suomen Taitoluisteluliitto (Figure)
FRA	**France**	Fédération Française des Sports de Glace
GEO	**Georgia**	Georgian Figure Skating Federation (Figure)
GER	**Germany**	Deutsche Eisschnelllauf-Gemeinschaft (Speed) Deutsche Eislauf-Union e.V. (Figure)

GBR	**Great Britain**	National Ice Skating Association of UK Ltd.
GRE	**Greece**	Hellenic Winter Sports Federation (Provisional Member Figure)
HKG	**Hong Kong/ China**	Hong Kong Skating Union Ltd
HUN	**Hungary**	Hungarian National Skating Federation
ISL	**Iceland**	Icelandic Skating Association (Figure)
IND	**India**	Ice Skating Association of India
INA	**Indonesia**	Persatuan Olahraga Sepatu Roda Seluruh Indonesia (PORSEROSI) (Provisional Member for Figure and Speed)
IRL	**Ireland**	Ice Skating Association of Ireland (Figure) (Provisional Member Speed)
ISR	**Israel**	Israel Ice Skating Federation
ITA	**Italy**	Federazione Italiana Sport del Ghiaccio
JPN	**Japan**	Japan Skating Federation
KAZ	**Kazakhstan**	National Skating Federation of the Republic of Kazakhstan
KGZ	**Kyrgyz Republic**	Skating Federation of the Kyrgyz Republic (Provisional Member Figure)
LAT	**Latvia**	Latvian Skating Association
LIE	**Liechtenstein**	Liechtensteiner Eislauf Verband (Provisional Member Figure)
LTU	**Lithuania**	Lithuanian Speed Skating Association (Speed) Lithuanian Skating Federation (Figure)
LUX	**Luxembourg**	Union Luxembourgeoise de Patinage de Vitesse (Speed) Union Luxembourgeoise de Patinage (Figure)
MAS	**Malaysia**	Ice Skating Association of Malaysia
MEX	**Mexico**	Federacion Mexicana de Patinaje Sobre Hielo y Deportes de Invierno, A. C. (Figure)
MDA	**Moldova**	Figure Skating Federation of the Republic of Moldova (Provisional Member Figure)
MON	**Monaco**	Fédération Monegasque de Patinage (Figure)
MGL	**Mongolia**	Skating Union of Mongolia
MAR	**Morocco**	Association of Moroccan Ice Sports (Figure)
NED	**Netherlands**	Koninklijke Nederlandsche Schaatsenrijders Bond
NZL	**New Zealand**	Ice Speed Skating New Zealand Inc (Speed) New Zealand Ice Figure Skating Association (Inc) (Figure)
NOR	**Norway**	Norges Skøyteforbund
PHI	**Philippines**	Philippine Skating Union (Figure) (Provisional Member Speed)
POL	**Poland**	Polish Speed Skating Association (Speed) Polish Figure Skating Association (Figure)
QAT	**Qatar**	Qatar Skating Federation (Provisional Member Speed)

KOR	**Rep. of Korea**	Korea Skating Union
ROU	**Romania**	Romanian Skating Federation
RUS	**Russia**	Russian Skating Union (Speed) The Figure Skating Federation of Russia (Figure)
SRB	**Serbia**	Serbian Skating Association
SIN	**Singapore**	Singapore Ice Skating Association
SVK	**Slovak Republic**	Slovak Speed Skating Union (Speed) Slovak Figure Skating Association (Figure)
SLO	**Slovenia**	Slovene Skating Union
RSA	**South Africa**	South African Speed Skating Association (Speed) South African Figure Skating Association (Figure)
ESP	**Spain**	Federacion Española de Deportes de Hielo
SWE	**Sweden**	Svenska Skridskoförbundet (Speed) Svenska Konstakningsförbundet (Figure) Stockholms Allmänna Skridskoklubb (Club Member)
SUI	**Switzerland**	Schweizer Eislauf-Verband Internationaler Schlittschuh-Club Davos (Club Member)
THA	**Thailand**	Figure and Speed Skating Association of Thailand
TUR	**Turkey**	Turkish Ice Skating Federation
UKR	**Ukraine**	Ukrainian Speed Skating Federation (Speed) Ukrainian Figure Skating Federation (Figure)
UAE	**United Arab Emirates**	UAE Ice Sports Federation (Figure)
USA	**USA**	US Speedskating (Speed) The United States Figure Skating Association (Figure)
UZB	**Uzbekistan**	Winter Sports Association of Uzbekistan

INTERNATIONAL SKATING UNION

Headquarters: Registered postal address:

Avenue Juste-Olivier 17, 1006 Lausanne, Switzerland, Phone: (+41) 21 612 66 66,
Fax: (+41) 21 612 66 77, E-Mail: info@isu.ch

OFFICE HOLDERS 2016-2018

Council:

President:		Jan Dijkema	Netherlands
1st Vice President:	Speed Skating:	Tron Espeli	Norway
Vice President:	Figure Skating:	Alexander Lakernik	Russia
Members:	Figure Skating:	Junko Hiramatsu	Japan
		Patricia St. Peter	USA
		Marie Lundmark	Finland
		Benoit Lavoie	Canada
		Maria Teresa Samaranch	Spain
	Speed Skating:	Yang Yang	China
		Jae Youl Kim	Republic of Korea
		Stoytcho G. Stoytchev	Bulgaria
		Roland Etienne Maillard	Switzerland
		Sergio Anesi	Italy
Director General:		Fredi Schmid	Switzerland
Treasurer:		Ulrich Linder	Switzerland
Legal Advisors:		Michael Geistlinger	Austria
		Béatrice Pfister	Switzerland
Figure Skating Sports Directors:		Charles Z. Cyr	USA
		Krisztina Regöczy	Hungary
Speed Skating Sports Director:		Hugo Herrnhof	Italy

Technical Committees:

Single & Pair Skating:	Chair:	Fabio Bianchetti	Italy
	Members:	Susan Lynch	Australia
		Yukiko Okabe	Japan
		Rita Zonnekeyn	Belgium
	Appointed Skater:	Patrick Meier	Switzerland
	Appointed Coach:	David Paul Kirby	USA
Ice Dance:	Chair:	Halina Gordon-Poltorak	Poland
	Members:	Shawn Rettstatt	USA
		Alla Shekhovtsova	Russia
		Hilary Selby	Great Britain
	Appointed Skater:	Sylwia Nowak-Trebacka	Poland
	Appointed Coach:	Maurizio Margaglio	Italy

INTERNATIONAL SKATING UNION

Synchronized Skating:	Chair:	Christopher Buchanan	Great Britain
	Members:	Mika Saarelainen	Finland
		Petra Tyrbo	Sweden
		Lois Long	USA
	Appointed Skater:	Helena Ericson	Sweden
	Appointed Coach:	Cathy Dalton	Canada
Speed Skating:	Chair:	Alexander Kibalko	Russia
	Members:	Nick Thometz	USA
		Jae-Seok Choi	Rep. of Korea
		Christian Breuer	Germany
	Appointed Skater:	Vacant	
	Appointed Coach:	Jildou Gemser	Netherlands
Short Track Speed Skating:	Chair:	Nathalie Lambert	Canada
	Members:	Reinier Oostheim	Netherland
		Xun Xu	China
		Satoru Terao	Japan
	Appointed Skater:	Vacant	
	Appointed Coach:	Vacant	

Disciplinary Commission:

Chair:	Volker Waldeck	Germany
Members:	Allan Böhm	Slovak Republic
	Susan Petricevic	New Zealand
	Albert Hazelhoff	Netherlands

Medical Commission:

Chair:	Jane M. Moran	Canada
Members:	Sanda Dubravcic-Simunjak	Croatia
	Joel C. Shobe	USA
	Harm Kuipers	Netherlands
	Hiroya Sakai	Japan
	Ruben Ambartsumov	Ukraine
	Hannu Koivu	Finland
	Eunkuk Kim	Rep. of Korea

Development Commission: TBA

Honorary Presidents:		Year of election
Viktor Gustaf Balck †	Sweden	1925
Emerich von Szent Györgyi †	Hungary	1933
Herbert J. Clarke †	Great Britain	1955
James Koch †	Switzerland	1967
Jacques Favart †	France	1982
Olaf Poulsen †	Norway	1994
Ottavio Cinquanta	Italy	2016

INTERNATIONAL SKATING UNION

Honorary Vice Presidents:

Sven Låftman †	Sweden	1971
Hendrik Roos †	Netherlands	1977
John R. Shoemaker †	USA	1980
Hermann Schiechtl †	F.R.G.	1984
Georg Pettersson †	Sweden	1986
Jean Heckly†	France	1992
Josef Dedic †	Czech Republic	1994
Lawrence Demmy M.B.E.	Great Britain	1998
Gerhard Zimmerman	Germany	2010
David Dore †	Canada	2016

Honorary Secretary:

Georg Häsler †	Switzerland	1975

Honorary Members:

		Year of election
Hans Pfeiffer †	Austria	1939
Gustavus F. C. Witt †	Netherlands	1953
Marcel Nicaise †	Belgium	1959
Friedrich Kachler †	Austria	1959
Walter S. Powell †	USA	1961
Reginald J. Wilkie †	Great Britain	1963
Georg Krog †	Norway	1969
Ernest Labin †	Austria	1969
Harald Halvorsen †	Norway	1969
Ernest J. G. Matthews †	Great Britain	1977
Heinz Dragunsky †	G.D.R.	1980
Oskar Madl †	Austria	1980
George Blundun †	Canada	1980
Emil Skàkala †	Czechoslovakia	1980
Viktor Kapitonov †	U.S.S.R.	1984
Arne Kvaalen †	Norway	1984
Icilio Perucca †	Italy	1988
Elemér Tertak †	Hungary	1988
Donald H. Gilchrist	Canada	1992
Herman J. van Laer †	Netherlands	1992
Benjamin T. Wright	USA	1992
John Hurdis †	Canada	1992
Charles A. De More †	USA	1994
Hans Kutschera†	Austria	1996
Jean Grenier	Canada	1996
Jürg Wilhelm †	Switzerland	1998
Lars-Olof Eklund †	Sweden	1998
Jan W.P. Charisius †	Netherlands	1998
Wolfgang Kunz	Germany	1998
Joyce Hisey	Canada	2002
Walburga Grimm	Germany	2002
John Hall †	Great Britain	2002
Maria Bialous-Zuchowicz	Poland	2006
Claire Ferguson	USA	2006
Monique Georgelin	France	2006
Myong-Hi Chang	Rep. of Korea	2010
Courtney J.L. Jones O.B.E.	Great Britain	2010

Ulf Lindén	Sweden	2010
Gerhardt Bubník	Czech Republic	2010
James L. Hawkins	USA	2010
Phyllis Howard	USA	2016
Tjasa Andrée-Prosenc	Slovenia	2016
German Panov	Russia	2016
Lan Li	China	2016
György Martos	Hungary	2016
Peter Krick	Germany	2016
Alexander Gorshkov	Russia	2016
Ann Shaw	Canada	2016
Olga Gilardini	Italy	2016

Past Presidents		Years of service
Willem H.J. Mulier †	Netherlands	1892–1894
Viktor Gustav Balck †	Sweden	1895–1924
Ulrich Salchow †	Sweden	1925–1937
Gerrit W.A. van Laer †	Netherlands	1937–1945
Herbert J. Clarke †	Great Britain	1945–1953
James Koch †	Switzerland	1953–1967
Ernest Labin †	Austria	1967
Jacques Favart †	France	1967–1980
Olaf Poulsen †	Norway	1980–1994
Ottavio Cinquanta	Italy	1994–2016

Jacques Favart Trophy established 1981		Year of award
Irina Rodnina	U.S.S.R.	1981
Eric Heiden	USA	1983
Jayne Torvill / Christopher Dean	Great Britain	1986
Scott Hamilton	USA	1987
Katarina Witt	G.D.R.	1988
Karin Kania	G.D.R.	1990
Natalia Bestemianova / Andrei Bukin	Russia	1992
Tomas Gustafson	Sweden	1993
Gaétan Boucher	Canada	1994
Bonnie Blair	USA	1998
Kurt Browing	Canada	1998
Johann Olav Koss	Norway	1998
Ludmila & Oleg Protopopov	Switzerland	1998

Georg Häsler Medal established 1985		
Zoltán Balázs †	Hungary	1987
Willi Zipperlen †	Switzerland	1987
F. Ritter Shumway †	USA	1988
Herbert Kunze†	F.R.G.	1989
Assen Pavlov	Bulgaria	1989
W. Thayer Tutt †	USA	1989
Victor Blinov †	U.S.S.R.	1990

Georg Häsler Medal *(continued)*
established 1985

Andrea Ehrig	G.D.R.	1990
Radovan Lipovscak†	Yugoslavia	1990
Courtney J. L. Jones O.B.E.	Great Britain	1991
Milan Duchon	Czechoslovakia	1992
Klaas Schipper	Canada	1992
Lysiane Lauret	France	1993
Anna Sinilkina †	Russia	1993
George Howie†	USA	1993
Pamela E.L. Davis, M.B.E. †	Great Britain	1994
Jurjen Osinga	Netherlands	1994
Ivan Mauer	Slovak Republic	1995
Florea Gamulea	Romania	1996
David E. Morgan †	Australia	1996
Beat Häsler	Switzerland	1998
Mitsuo Matsumoto †	Japan	2000
Robert Moir	Canada	2002
Valentin Piseev	Russia	2002

ISU Gold Award of Merit
established 2004

Lysiane Lauret	France	2006
Lucy Brennan	USA	2007
Susan Johnson	USA	2007
Joachim Franke	Germany	2008
Ann Shaw	Canada	2008
David Mitchell	Great Britain	2016

International Skeleton Rules

2016

Table of Contents

1. IBSF COMPETITIONS 5
1.1 Olympic Winter Games *5*
1.1.1 Senior Olympic Winter Games 5
1.1.2 Youth Olympic Winter Games 5
1.2 Championships *5*
1.2.1 Senior World Championships 5
1.2.2 Junior World Championships 5
1.2.3 Continental Championships 5
1.2.4 Junior Continental Championships 5
1.2.5 Para World Championships 5
1.2.6 Summer Push World Championships 5
1.3 Official IBSF Competitions *5*
1.3.1 World Cup Competitions 5
1.3.2 Intercontinental Cup Competitions 5
1.3.3 Europe Cup and North American Cup Competitions 5
1.3.4 IBSF Sanctioned Competitions 5
1.3.5 Para World Cup Competitions 5
1.3.6 Youth Competitions 5
1.3.7 Summer Push Competitions 5
1.4 Test Competitions and International Training Period *5*
1.5 Allocation of Competitions *6*
1.6 Gender *6*
2. DISCIPLINES 7
2.1 Men's Skeleton *7*
2.2 Women's Skeleton *7*
2.3 Team Competition *7*
2.4 Other Disciplines *7*
2.4.1 Para-skeleton 7
2.4.2 Summer Push 7
2.4.3 Youth Competitions 7
3. ADMISSION 7
4. RIGHT TO PARTICIPATE IN COMPETITIONS 7
4.1 Olympic Winter Games *7*
4.2 Senior World Championships *8*
4.2.1 Requirements for participation in the Senior World Championships 8
4.3 Junior World Championships *8*
4.3.1 Requirements for participation in the Junior World Championships: 8
4.4 Continental Championships *8*
4.5 World Cup and Intercontinental Cup *9*
4.5.1 World Cup 9
4.5.2 Intercontinental Cup 9
4.6 Europe Cup and North American Cup *9*
4.6.1 Europe Cup 9
4.6.2 North American Cup 9
4.7 IBSF Sanctioned Competitions *10*
5. EVENT 10
5.1 General *10*
5.2 Costs *10*
5.3 Track *10*
5.4 Event Announcements and Invitations *10*
5.5 Organising Committee and Race Director *10*
5.6 Technical Equipment *11*
5.7 Liability Insurance *11*
5.8 Further Obligations of the Organiser *11*
6. JURY AND TECHNICAL DELEGATES 11
6.1 Jury License *11*
6.2 License for Material Controls *12*

6.3 Nomination ... *12*
6.3.1 Olympic Winter Games ... 12
6.3.2 Senior World Championships ... 12
6.3.3 Junior World Championships, Continental Championships, World Cup and Intercontinental Cup ... 12
6.3.4 Europe Cup and North American Cup ... 12
6.3.5 IBSF Sanctioned Competitions ... 12
6.4 Authority ... *12*
6.4.1 Jury ... 12
6.4.2 Technical Delegates ... 13
6.4.3 Attendance ... 13
6.4.4 Expenses ... 13
6.4.5 Authority to Inspect ... 13
6.4.6 Special Decisions ... 13
7. RACE DIRECTOR ... 13
7.1 Appointment ... *13*
7.2 Duties ... *14*
8. GENERAL REGULATIONS ... 14
8.1 Sporting Year ... *14*
8.2 Liability ... *14*
8.3 Amateurism Rules ... *14*
8.4 Licenses ... *14*
8.5 Insurance ... *14*
8.6 Entries ... *15*
8.7 Acceptance of the International Rules ... *15*
8.8 Track Records and Start Records ... *15*
8.9 Doping Controls ... *15*
8.10 Rule Violations ... *15*
8.10.1 Athlete Support Person Rule Violations ... 16
8.10.2 Prohibited Association ... 16
8.10.3 Burden of Proof ... 16
8.11 Sponsorship and Advertising ... *16*
8.12 Trademarks on Equipment ... *16*
8.12.1 IBSF Properties ... 16
8.12.2 Freely Available Advertising Areas ... 16
9. MEDICAL SERVICE AT THE TRACK ... 16
9.1 Race Medical ... *16*
9.2 Team Medical/Doctor ... *17*
9.3 Evacuation of injured athletes ... *17*
10. THE COMPETITION ... 17
10.1 Official Training ... *18*
10.1.1 Olympic Winter Games and Senior World Championships ... 18
10.1.2 Continental Championships, World Cup and Intercontinental Cup ... 18
10.1.3 Junior World Championships, Europe Cup and North American Cup ... 18
10.1.4 IBSF Sanctioned Competitions ... 18
10.1.5 Changes to Official Training ... 18
10.2 Starting Order during Training ... *18*
10.3 Track Conditions during Training ... *18*
10.4 Start Grooves ... *18*
10.5 Replacement of Athletes ... *18*
Double Races: ... 19
10.6 The Race ... *19*
10.6.1 Race Heats ... 19
10.6.2 Starting Order ... 19
10.6.3 Starting Order System ... 19
10.6.4 Start Number ... 20
10.6.5 Athletes and Manner of driving ... 20
10.6.6 Track Conditions during the Race ... 20
10.6.7 Track Walks ... 20
10.6.8 Start ... 20

10.6.9 Reduction 21
10.6.10 Interruption or Cessation 21
10.6.11 Repetition of a Heat 21
10.6.12 Replacement Races 21
10.6.13 Pilot Sleds 21
10.6.14 Timing Equipment specifications 21
10.6.15 Time Measurement 22
10.6.16 Maintenance of the timing equipment (in place from 2017/18 season on) 22
10.6.17 Use of push start facility 23
10.7 Parc Fermé 23
10.8 Material and Equipment 23
10.8.1 Sled 23
10.8.2 Runners (General) 23
10.9 Technical Inspections 23
10.10 Runner Diameter 24
10.11 Measurement of Runner Temperatures 24
10.12 Reference Runner 25
10.13 Runner Cleaning 25
10.14 Weight 25
10.15 Electronic Measuring Devices and Equipment 26
10.16 Other Equipment 26
10.16.1 Helmet 26
10.16.2 Shoes 27
10.16.3 Clothing 27
10.17 Awards 27
10.17.1 IBSF Championships 27
10.17.2 Official IBSF Competitions 27
10.18 Awards Ceremony 27
10.19 Protests 27
11. RANKING LISTS 28
11.1 Ranking List of the Race Series 28
11.2 IBSF Ranking List 28
11.3 IBSF Ranking List - Points 29
12. SKELETON SLEDS WITH DRAWINGS 30
12.1 Basic Principles 30
12.2 Construction 30
12.3 Dimensions (Figures 1, 2 & 3) 31
12.4 Construction Frame (Figures 1 & 2) 31
12.5 Saddle (Figures 1, 2 & 3) 31
12.6 Cowling 31
12.7 Weights 32
12.8 Runners (Figure 5) 32
12.9 Bumpers (Figures 1, 2 & 3) 32
12.10 Sled Coverings 33
12.11 Drawings 34
12.12 Equipment 37
13. MATERIAL SEIZURE 38
13.1 Procedure for the seizure of sled components for conformity tests 38
13.2 The Form 38
13.3 The Container 38
13.4 Remarks 38
14. ADVERTISING GUIDELINES AND DRAWINGS 40
15. FINAL CLAUSES 42
15.1 Coming into Force 42
15.2 Modifications 42
15.3 Interpretation 42
GLOSSARY 43

1. IBSF COMPETITIONS

The IBSF competitions consist of the following events:

1.1 Olympic Winter Games

1.1.1 Senior Olympic Winter Games

1.1.2 Youth Olympic Winter Games

1.2 Championships

1.2.1 Senior World Championships

1.2.2 Junior World Championships

1.2.3 Continental Championships

1.2.4 Junior Continental Championships

1.2.5 Para World Championships

1.2.6 Summer Push World Championships

1.3 Official IBSF Competitions

1.3.1 World Cup Competitions

1.3.2 Intercontinental Cup Competitions

1.3.3 Europe Cup and North American Cup Competitions

1.3.4 IBSF Sanctioned Competitions

1.3.5 Para World Cup Competitions

1.3.6 Youth Competitions

1.3.7 Summer Push Competitions

1.4 Test Competitions and International Training Period

The Organisers of IBSF competitions to be staged on newly constructed tracks shall offer all Members enough training in advance, during the preceding season respectively during the same season of the competition.

Training runs prior to races are to be offered also on any tracks that have been subject to constructional changes.

The Organisers of the Winter Olympic Games to be staged on newly constructed tracks shall offer a number of at least 40 training and competition runs prior to the Games to all Members. These training runs and competition runs must be offered in the form of two or more International Training periods, scheduled throughout the season.

Prior to the Games, the Organisers must also hold at least one test competition.

The quotas for participation in the International Training periods and in the test event are the same as for the World Cup of the season in which the International Training periods and/ or test event are held.

Furthermore the following nations can participate in the International Trainings periods and/or test event with 1 male or 1 female athlete:

- men the first 7 nations,
- women the first 5 nations

not qualified for the World Cup, provided that these athletes have taken part in and been ranked in, a minimum of 5 IBSF competitions on a minimum of 3 different tracks in the course of the previous 24 months.
Nations that do not have the right to compete in the World Cup, may not participate with their athletes in the ''Test event'' but their athletes can train during this time.

Moreover, for reasons of fairness and safety, immediately prior to the start of official training for the Olympic competitions (whether before or after the Opening Ceremony), the athletes (male and female athletes) registered for the Games must be given the possibility of at least 4 training runs.
Male and female athletes who in the previous and/or current season placed in the top 15 of the IBSF rankings for discipline cannot do additional training runs beyond the number prescribed by the present Article. This does not apply to athletes from the host country.
Moreover, the Organiser of the trainings periods and Test Event must grant that all participating athletes and their assistants/coaches will be provided with lodging in at least a three star hotel, full board, at a maximum price of € 80 per day.

The Organisers of the World Championships must offer an International Training period, to prepare for the championships and it must take place during the same competitive season in which the World Championships are organised. They are exempt from doing this if during the preceding competitive season a World Cup competition had been organised on the same track
During the training periods in preparation for the Winter Olympic Games and/or World Championships, the Organiser shall offer training runs upon payment of the following amount: a maximum of € 12 for each skeleton training run shall be offered.
If the training period is to be staged as a test competition, the Organiser must offer the runs free of charge.
However, the Organiser may require payment of the entry fee.

1.5 Allocation of Competitions

a) World Championships

The Congress assigns the World Championships to the respective Member Federations a maximum of four years in advance upon written application.

b) Official IBSF Competitions

The remaining official IBSF competitions are assigned yearly by the IBSF Executive Committee, and must be listed on the IBSF International Calendar.

1.6 Gender

If the IBSF International Rules do not explicitly indicate the gender, they apply to both men's and women's skeleton.

2. DISCIPLINES

The following disciplines are contested:

2.1 Men's Skeleton

2.2 Women's Skeleton

2.3 Team Competition

2.4 Other Disciplines

2.4.1 Para-skeleton

see IBSF Para-skeleton Rules

2.4.2 Summer Push

see IBSF Summer Push Rules

2.4.3 Youth Competitions

see IBSF Youth Rules

3. ADMISSION

The right to participate in championships and official IBSF competitions is reserved only for athletes registered by IBSF Members.
The athletes must fulfill one of the following conditions:

- They must hold citizenship of the country of the Member concerned, and may not have taken part in international IBSF competitions on behalf of another Member, or
- They must have their official residence in the country of the Member concerned, and may not have taken part in international IBSF competitions on behalf of another Member, or
- They must have changed their citizenship or their official residence, and have been released by their former Member and accepted by their new Member. In this case, the athlete may represent one of the two Members, but not both.

An athlete may represent only one nation during any competition season, which lasts from October 1 to September 30 of the following year.
Applications to change Federations may only be submitted between March 31 and September 30 of each year.
When athletes switch nations, they keep their scores and ranking in the IBSF Ranking List, as well as the number of competitions in which they have participated; however, they do not keep the right to the previous quotas for participation, which remains tied to the nation of origin.

4. RIGHT TO PARTICIPATE IN COMPETITIONS

4.1 Olympic Winter Games

The criteria for the right to participate in the Olympic Winter Games are determined by the IOC. The qualification rules are determined by the IOC in collaboration with the IBSF. The qualification rules are communicated directly by the IOC to all National Olympic Committees. For the Olympic Winter Games

the IBSF Discipline Ranking List will be cleaned of all athletes representing a nation that has already reached its maximum amount of quota spots available for the competition. E.g. If Nation A has 3 quota spots, all Nation A's other athletes on the List will be taken out of the list, allowing other Nations athletes to move up the List.

4.2 Senior World Championships

The Senior World Championships take place annually, with the exception of the Olympic year. Quotas are based on the current IBSF Ranking List.

The quotas for participation in the Senior World Championships are as follows:

Men:	Nations with 3 athletes in the Top 30: 3 starting places
	Nations with 2 athletes in the Top 50: 2 starting places
	Nations with 1 athlete in the Top 60: 1 starting place
	All remaining nations with 1 athlete
Women:	Nations with 3 athletes in the Top 25: 3 starting places
	Nations with 2 athletes in the Top 35: 2 starting places
	Nations with 1 athlete in the Top 45: 1 starting place
	All remaining nations with 1 athlete

The defending Junior World Champion is also entitled to participate.

4.2.1 Requirements for participation in the Senior World Championships

Participation is allowed only for athletes who have taken part in, and been ranked in, a minimum of 5 IBSF competitions on a minimum of 3 different tracks in the course of the previous 24 months prior to the competition. In addition the athletes must have been ranked in at least 3 of these 5 races on a minimum of 2 different tracks during the on-going season.

4.3 Junior World Championships

The Junior World Championships take place annually. Only athletes from the Junior category may participate. All National Federations may participate with a maximum of 3 athletes.

4.3.1 Requirements for participation in the Junior World Championships:

Participation is allowed only for athletes who have taken part in, and been ranked in, a minimum of 3 IBSF competitions on a minimum of 2 different tracks in the course of the previous 24 months.
Juniors are athletes who have not yet reached the age of 23 years on the date of the Junior race. Furthermore, Juniors are all those athletes who reach the age of 23 years in the period of October 1 to March 31 of the current season.

4.4 Continental Championships

The quotas for participation in the Continental Championships are identical to those of the World Cup if the Championships are held within the course of a World Cup competition. Nations of the respective continent that are not qualified to participate in the World Cup have the right to participate with one athlete. These athletes are ranked only in the Continental Championships and shall receive no World Cup points. They are drawn separately at the end of the field of competitors.
These athletes start at the end of the field of competitors corresponding to their place in the IBSF rankings. The starting order for athletes without points is drawn by raffle.
In the second race heat, they start according to their ranking after the first heat.

4.5 World Cup and Intercontinental Cup

Quotas for the new season are based on the final results of the previous year's IBSF Ranking List.

4.5.1 World Cup

The quotas for participation are determined as follows:

Men:	Nations with 3 athletes in the Top 30: 3 starting places
	Nations with 2 athletes in the Top 50: 2 starting places
	Nations with 1 athlete in the Top 60: 1 starting place
Women:	Nations with 3 athletes in the Top 25: 3 starting places
	Nations with 2 athletes in the Top 35: 2 starting places
	Nations with 1 athlete in the Top 45: 1 starting place

4.5.2 Intercontinental Cup

The quotas for participation are determined as follows:

Men:	Nations with 3 athletes in the Top 60: 3 starting places
	Nations with 2 athletes in the Top 75: 2 starting places
	All remaining Nations with 1 athlete
Women:	Nations with 3 athletes in the Top 45: 3 starting places
	Nations with 2 athletes in the Top 60: 2 starting places
	All remaining Nations with 1 athlete

Requirement for participation in the Continental Championships, World Cups and Intercontinental Cups: Participation is allowed only for athletes who have taken part in, and been ranked in, a minimum of 5 IBSF competitions on a minimum of 3 different tracks in the course of the previous 24 months.

4.6 Europe Cup and North American Cup

Quotas for the new season are based on the final results of the previous year's IBSF Ranking List.
The athletes placed among the top 15 of the current season's or previous season's (until the beginning of the current season's) IBSF ranking will not be admitted either to the Europe Cup races or to the North American Cup races.

4.6.1 Europe Cup

The quotas for participation are determined as follows:

Men:	Nations from Europe and Africa with a maximum of 4 athletes.
	All remaining nations from America, Asia and Oceania with a maximum of 2 athletes.
Women:	Nations from Europe and Africa with a maximum of 4 athletes.
	All remaining nations from America, Asia and Oceania with a maximum of 2 athletes.

4.6.2 North American Cup

The quotas for participation are determined as follows:

Men:	Nations from America, Asia and Oceania with a maximum of 4 athletes.
	All remaining Nations Europe and Africa with a maximum of 2 athletes.
Women:	Nations from America, Asia and Oceania with a maximum of 4 athletes.
	All remaining Nations Europe and Africa with a maximum of 2 athletes.

4.7 IBSF Sanctioned Competitions

The Organiser together with the IBSF will establish the right to participate, but at a minimum there must be 2 nations per discipline. All IBSF rules and regulations apply unless specifically stated elsewhere in these rules. An athlete may count one (1) of these races as participation in other IBSF competitions.

5. EVENT

5.1 General

Only the IBSF, as well as its Members, have the right to organise international competitions.
All official international IBSF competitions shall be organised under the supervision of the IBSF. The IBSF shall award the competition to a Member that is able to undertake the organisation of the competition, or is able to pass it on to an association (Club) or an Organising Committee. The Member remains responsible for the orderly execution of the event.

5.2 Costs

The Organiser to whom the Organisation of the event has been awarded assumes the entire organisation and its costs.

5.3 Track

The Organiser shall make the track available in the best possible condition for the official training and the race. The usage of the track during the official training and the race is free of charge.

5.4 Event Announcements and Invitations

The Organiser of the competition shall be responsible for the event announcements and invitations.
The Organiser must present the official event announcement with the program schedule to the IBSF Executive Committee for approval by August 15.
The Organiser must send the program schedule to the Member Federations and the appointed Jury Members within two weeks of receiving the approval of the IBSF.

The event announcement must include:

- the name of the competition
- the location and date of the competition
- a schedule for the official training and the race
- a short description of the track, including a sketch of the track
- the entry deadline
- the address of the Organising Committee with exact office times, telephone number, fax number and e-mail address
- the name of the Chief of Organisation
- the name of the Race Director
- the names of the Jury Members and the Technical Delegate, if any
- information about facilities, benefits and hotel accommodations
- any conditions of entry
- the location and time of the first team captains' meeting

5.5 Organising Committee and Race Director

An Organising Committee and a Race Management Office shall be formed in order to guarantee the orderly execution of the event.

The Race Director must possess an IBSF International Jury License. He is responsible for ensuring that the entire event is carried out in accordance with the IBSF International Rules. He shall ensure that skilled and responsible people hold all the important positions in order to assure the smooth progression of the event. Furthermore, he is obliged to ensure that the track is in perfect condition and that the safety of the athletes, coaches and spectators is guaranteed.

5.6 Technical Equipment

- voice communication among the start, the finish and the timekeepers
- voice communication between the Race Director and the Jury
- numerous loudspeakers
- at least two calibrated instruments for measuring runner temperature
- an electronic timing system
- a room for team captains' meetings
- sufficient changing rooms and sanitary facilities
- a weigh scale, calibrated every year
- sufficient transport vehicles
- a first aid room
- medical service
- a doping control room
- video surveillance on the track
- a room suitable for technical inspections of sleds and runners
- A suitable room, possibly next to the start, equipped with Internet connection for the Jury
- sufficient computers and photocopiers
- a score board
- optical and acoustic devices to authorize the start
- barricade fences and tape for the parc fermé
- sufficient and suitable racks for positioning the sleds

5.7 Liability Insurance

The Organiser is obliged to obtain sufficient public liability insurance.
The insurance must cover the IBSF staff involved in the respective competition.

5.8 Further Obligations of the Organiser

The obligations of the Organiser of IBSF competitions are specified in writing within the framework of a contract that is negotiated between the IBSF and the Organiser's National Federation. The Organiser shall make available all official times recorded during the trainings and the race to the team captains of all participating nations as quickly as possible, preferable by email or in an electronical way. The results should be accessible online. Upon request the official times can be printed. Race results must be forwarded to the media and the IBSF immediately after the conclusion of the event.

6. JURY AND TECHNICAL DELEGATES

6.1 Jury License

The Jury Members and Technical Delegates, appointed by the IBSF Executive Committee, must possess an IBSF International Jury License in order to officiate. Each National Federation has the right to recommend people suitable for obtaining an IBSF International Jury License.
This License can be acquired after taking an examination on the IBSF International Rules for Bobsleigh and Skeleton. In principle, the examinations take place two times per year, on the occasion of the Senior World Championships and of a World Cup competition on a different continent. The respective

National Federations must register potential candidates with the IBSF Secretary General in advance (at least one month prior).

6.2 License for Material Controls

In order to be allowed to execute their office, the Material Controllers appointed by the Executive Committee must have an International Material Controller License of the IBSF. Each National Federation has the right to propose candidates who are eligible to obtain the International Material Controller License of the IBSF. The examinations will be held as specified by IBSF announcement. The respective National Federations must register potential candidates with the IBSF Secretary General in (at least one month prior).

6.3 Nomination

The IBSF Executive Committee nominates the Juries and the Material Controllers. The National Federations have the right to make recommendations.

6.3.1 Olympic Winter Games

- one or two Technical Delegates
- a Jury President
- two Jury Members
- two Jury Assistants, if required
- two or three Material Controllers

6.3.2 Senior World Championships

- one or two Technical Delegates
- a Jury President
- two Jury Members
- two Jury Assistants, if required
- two Material Controllers

6.3.3 Junior World Championships, Continental Championships, World Cup and Intercontinental Cup

- one or two Technical Delegates
- a Jury President
- two Jury Members
- Jury Assistants, if required
- two Material Controllers

6.3.4 Europe Cup and North American Cup

- one or two Technical Delegates
- a Jury President
- one or two Jury members
- one or two Material Controllers

6.3.5 IBSF Sanctioned Competitions

A Jury President or a Technical Delegate who represents the IBSF, with the task of controlling and supervising the event.

6.4 Authority

6.4.1 Jury

The Jury is the highest authority of the competition and implements control with the right to make final judgments within the scope of the IBSF International Rules.
The decision of the Jury is final, incontestable and takes effect immediately.
Furthermore, the Jury is responsible for:

- potential changes of the ice temperature
- any change of sleds
- any change of runners
- any repetition of a heat
- any reduction in the number of training runs
- any interruption or cessation of the race, after consultation with the Race Director and the Chief of Track
- any reduction in the number of participants
- any penalties for rule violations
- the length of the start grooves
- the number of pilot sleds
- the temperature and weight checks
- decisions regarding protests
- any suspension of athletes
- closing the track in case of danger

6.4.2 Technical Delegates

During the Olympic Winter Games one Technical Delegate for Bobsleigh, one Technical Delegate for Skeleton and one additional Technical Delegate are to be appointed. During the Senior World Championships one Technical Delegate for Bobsleigh and one Technical Delegate for Skeleton are to be appointed.

In principle, for all other IBSF events only one Technical Delegate may be appointed for both disciplines.

The power to make decisions regarding the event lies exclusively with the Jury.

If no Technical Delegate has been appointed, the Jury President acts automatically also as Technical Delegate.

6.4.3 Attendance

The Jury President must be available from the first team captains' meeting onward. The Jury is responsible for the compliance with the IBSF International Rules from the start of the official training to the end of the awards ceremony. In cases of absence of a Jury Member, the IBSF appoints a substitute.

6.4.4 Expenses

The IBSF Executive Management Committee determines annually the reimbursement of allowable expenses of the Jury and the Technical Delegate, and informs all concerned by circular letter.

6.4.5 Authority to Inspect

During the training and the race, the Technical Delegate and each Jury Member shall have access without prior notification to all technical equipment and facilities necessary to hold the competition.

6.4.6 Special Decisions

The Jury is also responsible for all decisions pertaining to the competition that are not specified in these Rules.

7. RACE DIRECTOR

7.1 Appointment

The Race Director, appointed by the Organiser, must possess an IBSF International Jury License for all official IBSF competitions.

7.2 Duties

The Race Director is responsible for ensuring that, under the direction of the Jury, all measures are taken that are necessary for the orderly progression of the competition according to the IBSF International Rules. This includes the progression of the team captains' meetings, the training and the race.
Potential necessary changes taken on short notice must first be arranged with the Jury and the IBSF Coordinator.
The Race Director decides upon the use of sunshades during rain, snowfall, or sunshine. He shall inform the Jury President immediately about all decisions.

8. GENERAL REGULATIONS

8.1 Sporting Year

The sporting year of the IBSF runs from October 1 to September 30 of the following year.

8.2 Liability

The IBSF assumes no liability for accidents, damages, or other claims that should result from the allocation of the competition or from its proceedings.

8.3 Amateurism Rules

The rules of the IOC are adopted here.

8.4 Licenses

All athletes must be electronically registered by their National Federation for an IBSF International License prior to participating in the sport of skeleton.
The minimum age for athletes for obtaining an IBSF International License is 14-years of age. Athletes under the age of 18 require the permission of their parents or legal guardian in order to exercise the sport of skeleton. The parents or legal guardian must sign the letter of permission and the signature must be certified.
The IBSF Electronic License must be filled out in all details and certified by the President or a duly authorized Officer of the National Federation and submitted with a digital photograph. By registering for a license, the National Federation verifies and confirms that the athlete:

- has had a medical check and has met the medical requirements for skeleton;
- is covered by insurance against accidents deriving from the practice of skeleton training or racing;
- is covered by insurance against liability;
- has been issued the IBSF International and Anti–Doping Rules, and;
- has signed a form in which the athlete declares compliance with the IBSF International and Anti–Doping Rules.
- has signed a copy of the IBSF Athlete Code of Conduct.

The license is valid for one season (October 1 to September 30).

8.5 Insurance

The Member Federations of the IBSF are responsible for ensuring that each of their athletes is sufficiently covered by accident and disability insurance, as well as public and third party liability insurance. All risks that may arise from an accident must be completely covered by the insurance.

8.6 Entries

Prior to the deadline specified in the event announcement, the Members shall inform the Organiser of the competition online of the athletes to be entered in the competition.
The Members are obliged to inform the IBSF Secretary General of the names of those people who are authorized to submit entries.
The name of the team captain shall be given to the Jury at the first team captains' meeting.
The Members have the right to select the athletes that shall participate.
The entry fees belong to the Organiser and amount to the value of € 25 per athlete.
If the entry deadline specified in the event announcement is not observed, the entry can be accepted for a double entry fee.
Entries may be withdrawn at any time. Already paid entry fees are non-refundable.
Entry fees must be paid at the first team captains' meeting.

8.7 Acceptance of the International Rules

With the submission of the entry, the participants (athletes, team captains, coaches and support staff) accept these Rules as binding.

8.8 Track Records and Start Records

Track records and start records will only be recognized by the IBSF if they have been performed during official international IBSF races. The record may be recognized if the athlete has been subjected to a weight test and their sled to a technical inspection during the competition. If the record is equaled in a subsequent race heat, it does not count as a record. In the event of a draw in the same race heat, more than one athlete may be listed as the record holders. The record cannot be recognized until it has been stated that there have been no violations of the IBSF International Rules.

8.9 Doping Controls

Doping is prohibited.
The IBSF Executive Committee can arrange for doping controls at all IBSF competitions and at any time outside of the competitions.
The doping controls are carried out according to the IBSF Anti-Doping Regulations.
The IBSF Executive Committee can authorize international specialized facilities to carry out these controls.
By signing the IBSF International License, the athlete is obliged to accept the IBSF Anti-Doping Regulations and to submit to the controls determined by the IBSF Executive Committee.
By signing the Acknowledgement and Agreement, the athletes, team captains, technicians, coaches and support staff recognize the new IBSF Anti-Doping Regulations.

8.10 Rule Violations

The Jury is responsible for the compliance with the IBSF International Rules from the first team captains' meeting to the end of the awards ceremony.
The Jury determines the penalties for violations against the provisions of the IBSF International Rules according to the gravity of the offence:

- a warning
- a fine
- disqualification from the competition
- application for disqualification from other competitions to the Executive Committee
- application to the Executive Committee for withdrawal of the international License

The athlete concerned or his National Federation has the right to defend himself before a final decision is made regarding the cancellation of the IBSF International License.

The fine is collected by the Jury, which forwards it to the IBSF.

8.10.1 Athlete Support Person Rule Violations

An Athlete Support Person (Coach, sled or runner builder, physio or any other person) may be deemed to have broken or contributed to the breaking of IBSF Rules. In this case the Jury determines the penalties for violations against the provisions of the IBSF International Rules according to the gravity of the offence:

- a warning
- a fine
- disqualification from the competition / venue
- application for disqualification from future IBSF competitions to the Executive Committee

8.10.2 Prohibited Association

Prohibited Association: In the event that an Athlete Support Person is disqualified from an IBSF event or events (8.10.1) it is prohibited for an athlete (athletes, team or nation) to associate with this person for the duration of their disqualification. If after receiving a written warning the athlete (athletes, team or nation) continues to associate with the disqualified person the athlete (athletes, team or nation) may be given a

- a fine
- disqualification from the competition
- disqualification from future competitions

In order for this provision to apply, it is necessary that the athlete (athletes, team or nation) has been advised in writing by the IBSF of the Athlete Support Person's disqualifying status and the potential consequence of prohibited association and that the athlete can reasonably avoid the association.

8.10.3 Burden of Proof

The burden shall be on the athlete (athletes, team or nation) to establish that any association with the Athlete Support Personnel described in Article 8.10.1 or 8.10.2 is not in a professional or sport- related capacity.

8.11 Sponsorship and Advertising

The IBSF and its Member Federations can negotiate contracts with commercial firms or organisations.

8.12 Trademarks on Equipment

8.12.1 IBSF Properties

The IBSF property areas for advertising with sponsors or similar entities are governed by the IBSF Advertising Guidelines. The specifications established therein shall be followed. Violations result in penalties.

8.12.2 Freely Available Advertising Areas

With the exception of the areas entitled to the IBSF in accordance with the IBSF Advertising Guidelines, unlimited advertising may be placed on the sled, the equipment and the athlete.

9. MEDICAL SERVICE AT THE TRACK

9.1 Race Medical

The following must be available at the track during the official training runs and the race heats:

- One medical specialist with knowledge of emergency medical aid
- One medical vehicle used as emergency ambulance
- One room exclusively used for first aid treatment – which is marked as such.

For race days in addition:

- One medical doctor with knowledge of sports and able to decide “Fit to slide” – e.g. concussion…

One medical vehicle must be present at all times on the track. In case the medical vehicle is leaving the track training/race must be stopped.
Should medical personal be medically required, training/race must be stopped.

The Organiser shall be attentive to this regulation, as the Organiser is responsible for compliance with these requirements.

The IBSF Medical Committee decides on any possible exceptions to the above. The Jury President must be informed of these exceptions prior to the start of the official training.

Tasks of the race medical:

- responsible for the first medical aid for injuries and illnesses of the athlete
- coordination of transportation of injured or ill athletes for further medical treatment
- after every crash, the athlete must come to the race medical for an examination in order to obtain the authorization to participate further in the training or in the race. If the race medical suspects a concussion or serious injury athletes license must be invalidated ("mark the box on the form"), he is entitled to prohibit the concerned athlete from further participation. In these cases, the race medical must immediately inform the Jury President of the athlete’s inability to continue to participate in the competition, and the athlete is accordingly officially removed from the competition. The Jury President immediately will inform the IBSF office to temporarily unlicense the concerned athlete. The race medical must complete an Injury Registration Document after every examination of an injured athlete. At the end of the competition, all of these documents (including timesheets) must immediately be forwarded to the IBSF office and the Chairman of the IBSF Medical Committee.

Only a medical doctor can provide "Fit to slide" approval to return to sliding.

9.2 Team Medical/Doctor

Race medical/doctor and team medicals/doctors should cooperate on evaluation and treatment.

9.3 Evacuation of injured athletes

The event Organisers must guarantee that injured athletes can be transported away from any point of the entire length of the track.

10. THE COMPETITION

During a competition (the official training and the race), athletes are not permitted to make runs on the track outside of the official schedule, nor are they permitted to conduct training or races on other tracks at the same time or compete on more than one circuit. However, athletes are allowed to conduct training or races on other tracks in the first week of a two-week competition.

The IBSF may establish a Travel Day in its schedules. On IBSF Travel days no athlete may participate in a training or race on that track.

10.1 Official Training

Participation in the official training is only permitted for athletes registered for the race.

10.1.1 Olympic Winter Games and Senior World Championships

Directly prior to the race, 6 official training runs shall be offered.

10.1.2 Continental Championships, World Cup and Intercontinental Cup

Directly prior to the race, 3 days of official training with a minimum total of 6 official training runs shall be offered.

10.1.3 Junior World Championships, Europe Cup and North American Cup

Directly prior to the race, 3 days of official training with a minimum total of 6 official training runs shall be offered.

10.1.4 IBSF Sanctioned Competitions

The Organiser together with the IBSF will determine the number of official training runs. A minimum of 3 official training runs must be offered.

10.1.5 Changes to Official Training

The IBSF Executive Committee can modify the number of official training days and / or training runs in official IBSF competitions. However, the change in the number of official training days and / or training runs must be declared in the event announcement.
At all official IBSF competitions, each athlete must complete two training runs without accident to be allowed to participate in the race.

10.2 Starting Order during Training

The starting order of the participating nations shall be drawn at the first team captains' meeting. If possible, the training is run according to "nation groups".
A training group shall not exceed 10 athletes.
The following starting order applies for events in which the official training takes place for 2 or 3 days:

- 1st day: from nation 1 to the end
- 2nd day: from the end to nation 1
- 3rd day:start order according to the IBSF Ranking List (men and women train separately)

10.3 Track Conditions during Training

If possible, the final day of official training should take place at the same time as the race and the track preparation should correspond to the conditions of the race. No alterations to the track profile should be made after the final training session.

10.4 Start Grooves

The start grooves are determined by the Jury on the first day of training and can only be modified upon their command. Both grooves shall be prepared appropriately for skeleton runners (17 mm diameter).

10.5 Replacement of Athletes

It is possible to replace an athlete with another athlete from the same National Federation at any time during training. However, an athlete may only be replaced if the replacement athlete is still able to achieve the minimum number of accident-free training runs without a change in the program schedule.
An athlete who carries out runs beyond the official training (for example, as a forerunner or in the "guests" class) cannot take part in the competition later on. The Jury can make an exception to allow such athlete's participation in the Team Competition; however, this exception must be declared during the first team captains' meeting.

Double Races:

National Federations may allow new athletes to compete in the second race of a competition. The Federations will, however, be allocated only the number of training runs corresponding to their quotas. The Federations themselves must allocate these among their athletes.

National Federations may register a maximum of two new athletes for the second race at an WC, ICC, NAC and EC competition.
These athletes must be registered no later than the first team captains' meeting and will be allocated with the same number of training runs as the other athletes.

The replacement athlete must hold a valid IBSF International License.

10.6 The Race

10.6.1 Race Heats

An IBSF race can be held over 4 or 2 heats. A reduction in the number of heats is possible in cases of force majeure.

a) 4-Heat Races

In principle, the Olympic Winter Games and the Senior World Championships are held over 4 race heats.

b) 2-Heat Races

The Continental Championships, the Junior World Championships and all other official IBSF races are held over 2 heats. All athletes entered in the draw must conduct at least one race heat for the race to be officially valid.

10.6.2 Starting Order

Starting order for 2-heat races:

- 1st race heat: from 1 to the end
- 2nd race heat: from 20 to 1, according to the ranking of the first race heat

Starting order for 4-heat races:

- 1st race heat: from 1 to the end
- 2nd race heat: from 20 to 1 and from 21 to the end, according to the ranking of the first race heat
- 3rd race heat: from 1 to the end, according to the ranking after two race heats
- 4th race heat: from 20 to 1, according to the ranking after three race heats

10.6.3 Starting Order System

To hold a race, a minimum of 6 athletes from a minimum of 2 nations must participate.

- Olympic Winter Games, Senior World Championships and Junior World Championships
  The 10 best-placed athletes in the current IBSF Discipline Ranking List who are present are drawn for the assignment of starting numbers 6 to 15. The starting numbers 1 to 5 are assigned to the remaining athletes (the ones with points) by draw. All other athletes start according to the ranking in the current IBSF Discipline Ranking List from starting number 16 to the end.
- Continental Championships, World Cup, Intercontinental Cup, Europe Cup and North American Cup
  The season starts on the basis of the IBSF Ranking List from the previous season.
  The 10 best-placed athletes in the current IBSF Discipline Ranking List who are present are drawn for the assignment of starting numbers 6 to 15. The starting numbers 1 to 5 are assigned to the remaining athletes (the ones with points) by draw. All other athletes start

according to the ranking in the current IBSF Discipline Ranking List from starting number 16 to the end.
If only 10 or less competitors are registered for a race, all athletes are drawn.
If 11 to 14 participants are registered for the race, the 10 best placed athletes in the current IBSF Discipline Ranging List who are present are drawn for the assignment of starting numbers 5 to 14 or 4 to 13 or 3 to 12 or 2 to 11.
The starting numbers 1 to 4/3/2/ are assigned to the remaining athletes by draw.

Athletes without points are drawn at the end of the field.
The Jury holds the draw in public. An electronic draw by computer is possible. The athletes keep their start numbers for the duration of the competition.

10.6.4 Start Number

The IBSF claims the rights for the start numbers (sled and shirt) for its sponsors.
The start number shirts shall be worn during the race heats and the awards ceremony. They may be sewn along the sides, but otherwise they may not be aerodynamically modified, nor may they be attached by additional means.
The IBSF supplies the athletes with the start numbers.
The start number for the sled (not exceeding 18 cm x 12 cm) shall be attached to the rear third of the underside of the sled.
The start number may not be modified in any way.

10.6.5 Athletes and Manner of driving

All race heats must be run by the same athlete.
The race doctor or race medical and the Jury are authorized to prohibit athletes in inadequate mental or physical condition to compete.

Only driving from the headfirst prone position (lying on the stomach) is allowed. After the start (when timing commences at the 50 m point) during the race heat, the athlete is not allowed to lose contact with the sled.
The athlete must cross the finish line on his sled.
The finish line beam must be broken by the athlete's helmet.

10.6.6 Track Conditions during the Race

The track is prepared after agreement among the Jury, the Race Director and the Chief of Track.
In case of snowfall, it shall be made certain that a regularly scheduled race is possible. Particular attention shall be paid to the ice surface at the start up to the start time measurement (50 m), which shall be swept prior to the start of each sled. In particular, the start grooves are to be swept. The track must be swept regularly. The race director must prepare a written protocol for sweeping in consultation with the Jury. The written protocol has to be announced no later than the final Team Captains Meeting.

10.6.7 Track Walks

The times for the track walks are determined after agreement between the Race Director and the Jury, and are disclosed at the first team captains' meeting. Track walks are not allowed outside of these times. Entering the track during a run is absolutely prohibited.
There are no track walks on race days.

10.6.8 Start

The Jury defines a zone behind the start block that allows the athlete the necessary quiet for his preparations for the start. This zone may only be entered by the athlete, one coach and the Jury.
The start block may be stepped upon during the start procedure, but the rear edge may not be crossed.
The start line (the first timing point) must be clearly visible.
The athlete shall be present after the call to the start.

The starter clears the track by means of acoustic and optical signals. The athlete at the start must activate the timing device within 30 seconds.
The athletes can accelerate the sled by pushing it.
After the athlete has left the startblock the help from the third party during the start procedure while training and race is prohibited.

10.6.9 Reduction

If the number of registered athletes exceeds the capacity of the track, the Jury, in agreement with the Technical Delegate and the Race Director, can reduce the number of participants.
All registered athletes must be allowed to compete in the first heat.
The number of athletes can be reduced before each subsequent race heat.
The starting order does not change in such case.

10.6.10 Interruption or Cessation

The Jury, in consultation with the Technical Delegate, the Race Director and the Chief of Track, can interrupt or stop the race for the following reasons, among others:

- damage to the track
- weather conditions
- failure of the timing system or other technical equipment

After an interruption, the athlete at the start shall be granted a suitable amount of preparation time.

10.6.11 Repetition of a Heat

After a malfunction not caused by the athlete, the heat may be repeated with the authorization of the Jury.
The run may be repeated as soon as the athlete is ready to start.

10.6.12 Replacement Races

If a race is cancelled, the IBSF Executive Committee can decide to hold a replacement race at a later date on the same or a different track.
The following athletes may participate in the replacement race:

- all athletes eligible to participate, if the race concerned was cancelled prior to issuing the start numbers, or
- only those athletes who have received a start number for the cancelled race. Another drawing of the start numbers is carried out.

10.6.13 Pilot Sleds

The Jury determines the number of pilot sleds. The Organiser is obliged to provide a minimum of three pilot sleds. Before skeleton races, only skeleton sleds should be used.
If the Jury decides there are an insufficient number of pilot sleds available, the Jury can appoint athletes that are last in the starting order. These athletes start immediately after the pilot sleds, and their pilot run is also scored as a race heat.
The Race Organiser is fully responsible for the selection of the pilot sleds.

10.6.14 Timing Equipment specifications

a) Two independent timing systems, each consisting of at least one time measuring device, complete set of light beams and independent power supply, must be available and in operation during a competition (A and B systems).
b) The A system comprises all light beams for start, start time, four intermediate times, four speeds and finish time. The first interval time corresponds to the start time (50 m). Four interval times must be evenly distributed among the remainder of the track. For TV and Security reasons minimum 3 more light beams have to be set between Intermediate times and Speed traps in longer unmonitored parts of the track.

c) The B system comprises at least the start and finish light beams to record the run time. If a track is assigned to held Olympic Winter Games the B system has to be a 100% backup of the A system.
d) The time of day of both timing systems (A and B systems) must be synchronized and must provide accurate timing of 1/100 of a second.
e) All times have to be measured as Day Times. Intermediate times and Finish times are calculated by subtraction of Start time from Intermediate time or Start time from Finish time respectively. The result has to be truncated to 1/100 of a second.
f) Two evaluation and control computers for the timing system must be available and in operation during a competition.
g) The times measured by both timing systems must be recorded in both evaluation and control computers of the timing system.
h) In case of failure of the A system it must be possible to switch to the B system without time delay. After this, the times measured by the B system will be used for the continuation of the competition. The times recorded by the A system up to this point will remain valid.
i) In case of failure of the evaluation and control computer currently operating, it must be possible to switch to the second computer for controlling the timing system within a short time frame. The ranking valid up to this point is to be saved.
j) A check list has to be prepared by the Track operators detailing the switching between the two timing systems and the two control computers.
k) Independently from the computer, the light beam times recorded by each timing system must be printed as daytimes on a corresponding timeline printer.
l) For external service providers an online data interface must be available through which they can obtain the measured light beam times (e. g. when TV graphics are required)
m) Uninterrupted power supply must be available for the timing system (time measuring devices and control computers) securing that at least the time of the current sled to the finish is recorded. The power supply of the light beams of the A and B systems must be independent from each other.

10.6.15 Time Measurement

The Organisers have to hand over Time measurements to TD/Coordinator at the end of the competition.
Times equal to 1/100th of a second are given the same rank.
If two or more athletes achieve the same time in the first, second or third heats, the starting order for these athletes in the second, third and fourth heats respectively shall be determined according to the start number. In such a case, the athlete with the highest start number is the first to start.
If the number of participants is reduced prior to the final race heat, the eliminated athletes remain in the results with their final ranking. If in the final heat an athlete does not start or is disqualified, they do not receive a final ranking. The remaining athlete s move up in the ranking list.

10.6.16 Maintenance of the timing equipment (in place from 2017/18 season on)

a) For each season the timing equipment must be maintained by a professional company.
b) A maintenance report will be issued specifying the operations carried out during the maintenance.
c) Records must be kept of all existing deficiencies which cannot be corrected immediately through the regular maintenance activities (e. g. computer damage).
d) In the maintenance report it must be confirmed that the timing equipment is ready for use.
e) The track operator must submit the maintenance report to the IBSF Office prior to the first international competition.

10.6.17 Use of push start facility

Iced or non-iced push start facilities – regardless of whether they are located inside or outside the venue – may not be used during the race days of Senior World Championships, Junior World Championships, Senior Olympic Winter Games or Youth Olympic Winter Games by any athletes who participate in that event.

10.7 Parc Fermé

A parc fermé is utilized at every race.
The parc fermé is bordered by barricade fences and / or tape.

10.8 Material and Equipment

10.8.1 Sled

In principle, all race heats must be contested with the same sled. If the sled has been damaged beyond immediate repair, a replacement sled may be allowed with the authorization of the Jury. All sleds must be approved by the Material Inspectors / Jury before the ~~first~~ competition, and must carry an IBSF label. Replacement sleds used at the discretion of the Jury must be approved by the Materials Inspectors/Jury immediately after the race heat for which it has been used.

10.8.2 Runners (General)

In all official IBSF races listed on the IBSF-Calendar (OWG, World Championships, Junior World Championships, Continental Championships, WC, ICC, EC, NAC, etc.) only IBSF standard runners (standard material) are admitted. The authenticity of the runner steel may be controlled by the IBSF Jury and/or IBSF Materials Inspectors at any time. To define the authenticity of the runner steel, inspections may include the analysis of the composition of the runner material and examination of the hardness of the runner steel.
Only geometrical changes to standard IBSF runners through the removal of the original material are allowed. No materials (exceptions runner block and runner post) may be added in any way.
The use of any means of propulsion is prohibited.
Changing runners between race heats held on the same day is only permitted after damage and with the authorization of the Jury.
At the Jury's discretion, runners can be subjected at any moment to inspection with special equipment. In case of inconclusive findings, runners may be seized and sent to a specialized laboratory for further testing.
On the occasion of:

- Olympic Winter Games
- Senior World Championships

Complete inspections can be conducted prior to the competition.

10.9 Technical Inspections

The sleds participating in the race must be in the ''Parc Fermé'' (start area), positioned in the spaces assigned to them. All preparatory work performed on the sleds, including mounting the runners, must be completed **45 minutes** before the start of the race.
The sleds must be uncovered.
The sleds must be brought into the parc fermé with clean runners.
After this time point, no work may be performed on either the sleds or the runners. Changing runners and replacing sled parts is also prohibited. Only the person who must bring the sled to the start may enter the parc fermé.

The Parc Fermé is open for 10 minutes between the race heats. It is prohibited to bring tool boxes or anything similar into the ''Parc Fermé''. It is also prohibited to wear gloves or to cover the hands by any other means.
During this time it is allowed to sand scratches (only) after inspection by the Jury.
The runners can only be polished using abrasives provided by the IBSF.
The runners must remain mounted on the sled, and the sleds must not be moved away from their assigned space to adjust the runners. The use of any other materials and / or products is prohibited. Violation of this rule is penalized with an immediate disqualification from the race.
The Jury can at any time confiscate the abrasives provided by the IBSF, regardless of whether they have been used or not.

Only the Jury, in agreement with the IBSF Materials Committee, can give authorization for repair work to be performed on sleds with technical problems.
Between the individual race heats, no further work may be performed without the authorization of the Jury.
If a set of runners is so damaged during a race that immediate repair is not possible, the athlete has the possibility to use a new set of runners, after receiving the authorization of the Jury. The new set of runners is subject to the provisions of the IBSF International Rules.

All sleds and runners participating in the race can be subjected to technical inspections. The Jury decides which sleds and runners are to be inspected and when the inspection is to take place. Inspections of the other equipment can also be conducted. The Jury can assign the members of the IBSF Materials Committee to carry out these inspections.
In cases of suspicion, components of the sled can be confiscated and subjected to technical inspections. The inspections can be conducted at a mobile laboratory on the competition site. In this case, the Jury evaluates the laboratory results immediately and takes the appropriate action.
If the technical inspections are conducted after the race at a laboratory outside of the competition site, the inspection results are forwarded to the IBSF Executive Committee. The laboratory in charge must be approved by the IBSF. The procedures used must be in accordance with article 13 of these Rules.
In case the results show proof of a violation against the IBSF International Rules, the IBSF Executive Committee takes the appropriate action. In this case, the National Federation concerned shall bear the costs of the inspection and appraisal. The decisions of the Executive Committee are incontestable.

If it is determined that the IBSF International Rules have been violated, then it automatically results in disqualification from the competition concerned.

10.10 Runner Diameter

The Jury or the IBSF Materials Committee checks the diameter of the runners with official IBSF gauges.
The diameter of the runners may not be less than that of the gauge.

10.11 Measurement of Runner Temperatures

The runner temperatures are checked before the start according to the instructions of the Jury. Both runners are checked with an electronic measuring device equipped with a temperature measuring sensor and a display device for temperatures between at least +30° C and -20° C.
The Organiser must provide two electronic measuring devices, one for the Jury and one for the athletes participating in the race.
The temperature of the runners is measured on the side of the runner in the area of the runner post. The measuring sensor shall remain in contact with the runner until the display on the temperature measuring device is stable.

The temperature of the runners that are mounted on the sled being used in the race may exceed the temperature of the reference runner by a maximum of 4° C. If the temperature of the reference runner is less than -14° C, the runners on the sled may have a maximum temperature of -10° C. If an athlete's runner temperature exceeds the limit, another measurement of the temperature of the reference runner and of the runner on the sled shall be made immediately following the first measurement. If the second measurement also shows a temperature that exceeds the limit, it leads to immediate disqualification. This is then registered in the Temperature Measurement Protocol.

The sled must be moved from its assigned place in the start area to the runner temperature measurement station by carrying it (with runners away from the athlete's body). Cooling down the runners by touching them with snow or ice is not allowed.

10.12 Reference Runner

The temperature of the reference runner is measured according to the following procedure.

a) The reference runner must be made of IBSF standard runner material. It must be hung or otherwise positioned in the open air one hour before the start of the race, in the same climactic weather conditions as the sleds included in the race. When the reference runner is positioned in the open air, it must show a temperature of between +18° C and +22° C.
b) The exact temperature of the reference runner at the time it was positioned in the open air must be written on a clearly visible board in the start area. The board must also show the air and ice temperatures.
c) The temperature of the reference runner is measured on the side of the runner in the area of the runner post.
d) The temperatures shown on the temperature display board are updated as follows:

- The first time, 60 minutes before the start of the race
- 15 minutes before the start of the race and 5 minutes before the start of the second heat
- In the case of extraordinary climactic conditions (high temperatures), after measuring the runner temperatures the Jury can instruct the athletes to place their sleds on the snow or ice immediately before the start.

10.13 Runner Cleaning

The runners are treated and cleaned before the start of the race heats with special cleaning solutions provided by the IBSF.
In every race in which the IBSF standard material is required, all runners are sanded with sandpaper in the same manner. It must be obvious that a characteristic amount of material has been removed. If this is not the case the Jury can decide to repeat the procedure, until sufficient material has been removed or disqualify the athlete; upon request of the Jury, sandpaper with a coarser grain size may be used. The sandpaper grade is determined by the IBSF before the start of the season. The Jury can call for a different grain on certain tracks.
The IBSF will publish a runner testing Protocol. If any runners are found to be outside the limits set by the Protocol the athlete can be sanctioned by the Jury. The sanctions available to the Jury are outlined in 8.10 of these rules.

10.14 Weight

The weight is checked using a scale.
Weights can be checked at any time upon decision of the Jury.
The sled and the athlete shall be weighed immediately after the conclusion of the race heat, upon request of the Jury. No modifications to the sled or the other equipment may be made. The first weight test is then made. Each athlete may request a second weight test, if necessary. For the second test,

they have a maximum of 5 minutes to remove snow and ice from the sled. This occurs under the supervision of the Jury. Help from a third party is not allowed.
The observed weight must be registered in the Weight Protocol.

The combined weight of the sled and the athlete with complete race equipment may not exceed 115 Kg (women: 92 Kg).
The weight of the sled alone may not exceed 43 Kg (women: 35 Kg).
If the combined weight of the sled and the athlete with his equipment exceeds 115 Kg (women: 92 Kg), the weight of the sled along may not exceed 33 Kg (women: 29 Kg).

The maximum allowable weight can be reached by attaching ballast weights. The ballast weights must be affixed securely to the frame, base plate or the saddle. Ballast weights on the athlete's body are prohibited.

10.15 Electronic Measuring Devices and Equipment

In the time during which the track is subject to the control of the IBSF (e.g. official training, races, ITP and homologation), electronic or electrical measuring devices or equipment may not be used on the sled, on the athletes or on and beside the track. The IBSF or the Jury concerned has the power to grant exceptions such as specific measurements and/or POV recording (complete bobsleigh run), especially during a homologation of a track. In these cases the results of the measurements must be made known to all the participating National Federations. Footage obtained during homologation must be made available to all National Federations.

On and beside the track all coaching devices such as radios, ice thermometers and video recording devices are allowed, but this refers exclusively to such video recording devices, which are not controlled remotely and/or stationary and aren't positioned closely or attached to the track. Each National Federation is responsible to use these devices in a secure and safe manner.

TV cameras belonging to the track or IBSF Stakeholders are not subject to this article.

10.16 Other Equipment

10.16.1 Helmet

Wearing of a safety helmet is mandatory for all competitions, during both training and races.
Only helmets whose shell and padding cover the head and at least the ear area are allowed.
Each athlete who takes part in an IBSF Competition must wear a safety helmet approved by his / her National Federation.
Helmets with spoilers or protruding edges are not allowed.
The bottom edge of the helmet shell must maintain the shape of the helmets normally available on the market. Chin guards and clasps are not allowed to be positioned excessively low.
The chin guard, the visor and the hardware for attaching them are the only protruding elements allowed. These elements cannot, however, have aerodynamic coverings.
For safety reasons, all helmets must have a smooth surface.
A safety helmet

- has to be without any additionally attached aerodynamic elements or adhesive tape (except that used to fix the visor or the goggle strap), and
- the helmet shell must not have any concave shape except for the recesses for the visor, and
- the padding may protrude a maximum of 3 cm below the shell.

10.16.2 Shoes

The use of spikes on the shoes of the athletes is allowed for pushing the sled, as long as the spikes are arranged in brush form.
The maximum diameter of the spikes may not be greater than 1.5 mm, the spikes may not be longer than 5 mm and the minimum amount of spikes per shoe must not be less than 250.
Shoe coverings are prohibited.

10.16.3 Clothing

Training and race suits with short pants and short sleeves are not allowed.
No aerodynamic elements whatsoever may be attached either outside or under the race suit. If the Race suit has a hood attached, this must be worn completely or removed completely from the suit. The hood of the suit is not permitted to be tucked in, rolled, sewed into place or otherwise used in a fashion other than its intended purpose; to cover the athlete's head.
Race suits must be manufactured from an uncoated textile.

10.17 Awards

10.17.1 IBSF Championships

At official IBSF Championships, the IBSF awards gold, silver and bronze medals to the first, second and third placed athletes. The fourth, fifth and sixth placed athletes receive commemorative medals. The Organiser awards additional honorary prizes to the athletes.

10.17.2 Official IBSF Competitions

The Organiser awards honorary prizes to the first to sixth placed athletes.

10.18 Awards Ceremony

The awards ceremony should take place as soon as possible after the deadline for submitting protests.
The doping controls and technical inspections may also take place after the awards ceremony.
At all IBSF Championships and official IBSF competitions, the national flags of the first three placed athletes must be hoisted. The national anthem of the winning athlete must also be played.

10.19 Protests

Protests must be made verbally to the Jury immediately or at the utmost 5 minutes after the heat in which that incident happened. Additionally, the grounds for the protest must be submitted in writing to the Jury no more than 20 minutes after the conclusion of the race.
If no verbal declaration of protest is made, no written protest may be subsequently submitted.
Only the team captain may submit verbal and written protests. Collective protests are not allowed.
No protests are accepted after the submission deadline passes.
A fee in the value of € 100 shall be paid with the submission of the written protest. If the protest is rejected, the fee is forfeited in favor of the IBSF. Otherwise, the protest fee is returned.

The decision regarding a protest submitted during a race shall be made in a timely manner to allow the athlete affected by the protest to potentially continue to participate in the race.
In cases of protests submitted after the conclusion of the race, the Jury will announce its decision no more than one hour after the submission of the protest, if possible.
The decision of the Jury is determined by a simple majority of votes. If the votes are equal, the Jury President casts the deciding vote. Jury Assistants do not have the right to vote.
The decision of the Jury is final, incontestable and takes effect immediately.

11. RANKING LISTS

11.1 Ranking List of the Race Series

For the World Cup, Intercontinental Cup, North American Cup, Europe Cup and Youth Series, there are overall ranking lists (Men/Women) issued at the end of the season whereas the best results of each athlete in the particular race series are added up. The winner of the overall WC/ICC/EC/NAC/Youth is the athlete with the most points from the competitions in the particular race series. The first, second and third placed athletes in the overall ranking lists of each series, receive awards.

11.2 IBSF Ranking List

During the current season, the best results of each athlete are totaled by name for the IBSF Ranking List, regardless of the race series, or World Championships, in which the results were scored. It is consulted as an adjusted ranking list to determine the various quotas. The juniors are highlighted.
The number of races scored is equal to the number of World Cup races carried out up to that specific date during the current season.
The IBSF Ranking List for ICC, NAC and EC is updated weekly, at the latest on Tuesday of each week. With regards to the World Cup, the IBSF Ranking List is updated after each race.

The IBSF Ranking List serves to determine the Starting Order for the World Cup, Intercontinental Cup, North American Cup and Europe Cup races of the current season as well as for the first competition for each Series of the following competition season. If the ICC, NAC and or EC start before the WC the current ranking list of the corresponding series will be used to determine the starting order (updated once weekly from the second week on, at the latest on Tuesday of each week).

The IBSF Ranking List serves to determine the Nation Quotas and the Starting Order for the Olympic Winter Games and the World Championships.
The IBSF Ranking List serves to determine the Nation Quotas for the World Cup, Intercontinental Cup, North American Cup and Europe Cup races of the following season.

The top-ranked athletes of a nation determine the nation quotas for the World Cup competitions, the next-ranked athletes determine the quotas for the Intercontinental Cup competitions and subsequently the quotas for the North American Cup and Europe Cup competitions.

For the Senior World Championships the World Cup Points Table is applied, for the Junior World Championships the new ICC Points Table according to 11.3 is applied.

If an athlete sits out for a season, he is scored with 50% of his points achieved on the IBSF Ranking List for the first race of the following season.

In cases of equal points, the following decision criteria apply to the IBSF Ranking List:

- first, the highest single point score;
- next, in the event of a draw, the better scores at the race immediately previous (World Cup points are of higher priority than points obtained in the other race series)

11.3 IBSF Ranking List - Points

WC and WCh.		ICC and JWCh.		NAC/EC	
Rank	Points	Rank	Points	Rank	Points
1	225	1	120	1	75
2	210	2	110	2	65
3	200	3	102	3	55
4	192	4	96	4	50
5	184	5	92	5	45
6	176	6	88	6	40
7	168	7	84	7	38
8	160	8	80	8	36
9	152	9	76	9	34
10	144	10	72	10	32
11	136	11	68	11	30
12	128	12	64	12	28
13	120	13	60	13	26
14	112	14	56	14	24
15	104	15	52	15	22
16	96	16	48	16	20
17	88	17	44	17	18
18	80	18	40	18	16
19	74	19	37	19	14
20	68	20	34	20	12
21	62	21	31	21	10
22	56	22	28	22	9
23	50	23	25	23	8
24	45	24	22	24	7
25	40	25	20	25	6
26	36	26	18	26	5
27	32	27	16	27	4
28	28	28	14	28	3
29	24	29	12	29	2
30	20	30	10	30	1

12. SKELETON SLEDS WITH DRAWINGS

12.1 Basic Principles

- Skeletons are sleds with two runners that are used in races that are carried out on iced tracks.
- To propel the sled, only the pushing force of the athlete, when starting, and the force of gravity are allowed.
- All devices that help the sled's descent, particularly those capable of being used to steer or brake the sled in an active manner and with moving parts, are prohibited.
- No hydraulic, pneumatic or electrical devices of any kind are allowed on the sled.
- Sled manufacturers are responsible for ensuring that the sled is constructed in such a way that it can withstand the strain of repeated runs on bob tracks without damage.
  Also, the sled must be constructed in such a way that the runners may be adjusted without removing the sled from the assigned space (standing) during the races.
- In official competitions, after completion of the work in the parc fermé, the sled's specifications may no longer be modified in any way, other than through accidental damage.
- The Jury and / or the IBSF Materials Committee must be able to check the specifications of all construction elements without significant technical effort.

12.2 Construction

- In general, the skeleton sled is composed of the following construction elements:
  - construction frame with runner supports and runner post guides
  - saddle (supporting plate including handles)
  - cowling (pan, base plate, sled body, pod)
  - ballast
  - runners with runner blocks and runner posts
  - bumpers
  - sled coverings (supporting surface: padding, tape, etc.)
- The dimensions indicated in the drawings, diagrams and figures are compulsory.
- The weight of the sled is specified in the IBSF International Skeleton Rules.
- Protruding items that could cause injury are prohibited.
- Fairings, spoilers and aerodynamic elements are prohibited. The cowling is not considered to be a fairing.
- For the purpose of the IBSF, the term "steel" means an alloy of iron and carbon with an iron (Fe) content of more than 50%, or an alloy that reacts positively to the IBSF chemical test.
- This does not apply to certain specifically described sled components.
- No sprung, rubber, rubber-like or energy absorbing materials or elements may be used in the sled components or in the mechanical joints between them. Exceptions:
  - mounting locations of the cowling on to the construction frame (Figure 8)
  - openings of the cowling
  - coverings on the supporting surface and the saddle
  - filling up hollow spaces under the supporting surface (Figure 6)
  - between the construction frame and the cowling
- It is accepted that the runner loaded in the construction frame could cause a sprung effect.

12.3 Dimensions (Figures 1, 2 & 3)

- Sled length: 800 – 1200 mm
- Overall sled height: 80 – 200 mm (as prepared for the race)
- Runner gauge: 340 – 380 mm from runner center to runner center

12.4 Construction Frame (Figures 1 & 2)

- The construction frame consists of longitudinal and transverse bars and runner supports, which must be made of steel. Each of the two longitudinal bars must be constructed of a continuous piece of steel, with a minimum rectangular cross section of 30 mm wide x 5 mm high. (Figure 4) Each of the two transverse bars must be constructed of a continuous piece of steel, with a minimum rectangular cross section of 25 mm wide x 3 mm high. (Figure 4)
- Any additional elements on the construction frame must be bolted or welded.
- The runner supports must be rigidly attached to the construction frame. The runner supports are defined as the parts with slots and do not include any elements that have been welded on. (Figure 7)
- The corner connecting joints must attach the frame's bars firmly and rigidly to each other or to the runner supports. These joints may be welded or bolted with a minimum of 2 bolts per joint. There may be a vertical separation between the transverse bar and the longitudinal bar of not more than 2 mm. (Figure 7)
- The front transverse bar must be attached in the region of the runner support. The maximum permitted distance between the front end of the runner support and the transverse bar is 80 mm. The rear transverse bar must be attached in the region of the runner support. The maximum permitted distance between the rear end of the runner support and the transverse bar is 30 mm.
- The runner post guide may have maximum dimensions of 25 mm wide x 45 mm long. It must be rigidly attached to the construction frame.

12.5 Saddle (Figures 1, 2 & 3)

The saddle must be made of solid steel. It must be mounted on the construction frame. It may be divided into a maximum of two pieces. No handles, howsoever they are constructed, are permitted on the saddle.

The minimum distance prescribed between the saddle above the supporting surface is 100 mm (Figure 1). The saddle must be covered at all points where it is above the supporting surface. No handles, however constructed, are permitted. The athlete's arms must be outside the saddle during each run.

- Each side of the saddle may have a maximum of three openings; two with a maximum length of 120 mm each. The maximum distance allowed for the third opening, from the start of the opening to the rear most part of the saddle is 150 mm. (Figure 2)
- The saddle may not move laterally. If the saddle is constructed of two pieces, then they may not influence one another in movement. (Figures 1 & 3)
- The lowest point, front and back, of the saddle (in the longitudinal axis) may not be higher than the supporting surface.

12.6 Cowling

- The cowling must be constructed in one single piece. The cowling must be convex throughout (maximum allowable concavity over 300 mm is 3 mm). Exception:
  - within an area of 80 mm from the front edge (Figures 1 & 3)
- Multiple local protrusions or depressions are not allowed.
- The construction frame and the cowling must be two separate pieces. Laminating the construction frame in to the cowling is not allowed. Exception:

- 4 lamination strips with a maximum width of 50 mm (Figure 8)
- The cowling may be mounted to the construction frame by welding, gluing, bolting or riveting.
- The upper edge of the cowling may not be higher than the supporting surface.

12.7 Weights

- Ballast weights may be attached to the sled to reach the maximum permitted weight limit.
- Ballast weights must be affixed securely to the frame, base plate or saddle.

12.8 Runners (Figure 5)

- The runner blocks and runner posts must be welded to the runner.
- The runners must be mounted directly to the runner supports.
- Every runner must be constructed from one solid piece of the standard material according to IBSF specifications. The standard material is produced and distributed by a factory designated by the IBSF
- The material is supplied as polished round bars with a diameter of 16 mm (h9 tolerance class) and a length of 1000 mm, –0/+50 mm. The material is always supplied with markings. These markings must always be present on the runners and must not be altered in any way.
- All types of treatment are forbidden, including those which cause even only a local variation of the physical characteristics (*) and / or the composition and / or the structure of the material.
- No plating and/or coating is allowed
- The diameter of the steel runner must be 16 mm along its entire length right up to the joints with the runner supports and the runner posts (a shortfall of up to 0.50 mm is permissible).
- The grooves and milled areas on the runners must be formed in such a way as to avoid any excessive damage to the ice surface of the track. The depths of the millings and grooves, measured from the surface of the ice, must not be greater than 2 mm.
- By order of the Jury the runners maybe confiscated for in-depth inspection subject to protocol.

Note (*): The term “physical” is to be understood as a global term which comprises all specific terms like, for example, “mechanical”, “tribological”, “electromagnetic”, etc.

12.9 Bumpers (Figures 1, 2 & 3)

- Secure bumpers must be mounted on the front of the sled on both sides. The minimum permitted distance between the outside edge of the runner and the outside edge of the front bumper is 70 mm. The minimum permitted length of each front bumper is 120 mm. The front bumpers may only protrude a maximum of 15 mm on the left and right outside edge above the supporting surface.
- Equally secure bumpers must also be mounted between the saddle and the rear end of the sled. The minimum permitted distance between the outside edge of the runner and the outside edge of the rear bumper is 35 mm (measured at the rear runner support). The minimum permitted length of the rear bumper is 80 mm. They may not protrude laterally beyond the front bumpers.
- If the rear bumper is mounted in the direction of the middle of the sled, the outside dimension must increase in a straight line to the front bumper.
- All bumpers must be constructed of one single piece of round steel (exception: mounting onto the construction frame). They must extend far enough beyond the base plate to allow them to be checked at any time. Minimum diameter is 12 mm. Minimum measurement of worn bumpers is 11 mm.
- It is the responsibility of the sled builders to produce bumpers with sufficient durability to be able to withstand repeated contact with the track walls.

12.10 Sled Coverings

- The padding of the supporting surface at the front, rear and sides of the saddle (outside) must be horizontally flat. The width is determined by the outside edge of the sled. (Figure 3)
- No elevations, depressions or openings are allowed. This also applies to the inside of the saddle.
- Any protruding or sharp elements on the sled must be covered adequately, in order to avoid possible injury to athletes
- Sled coverings must be easily removable. (Figure 6)

12.11 Drawings

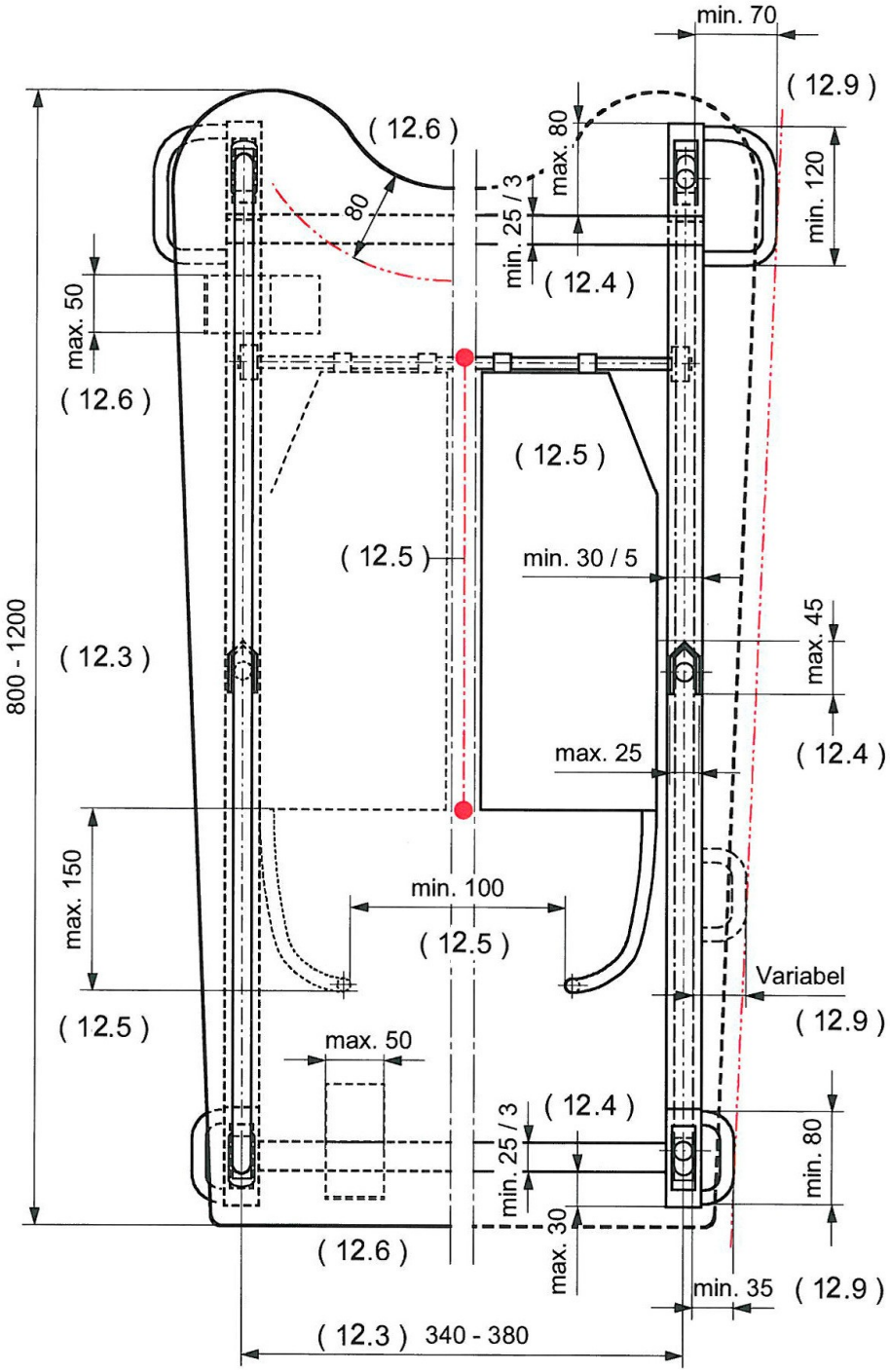

Fig. 1 (0.0) = Art. Nr.

ALLE MASSE IN MM / ALL DIMENS. IN MM /

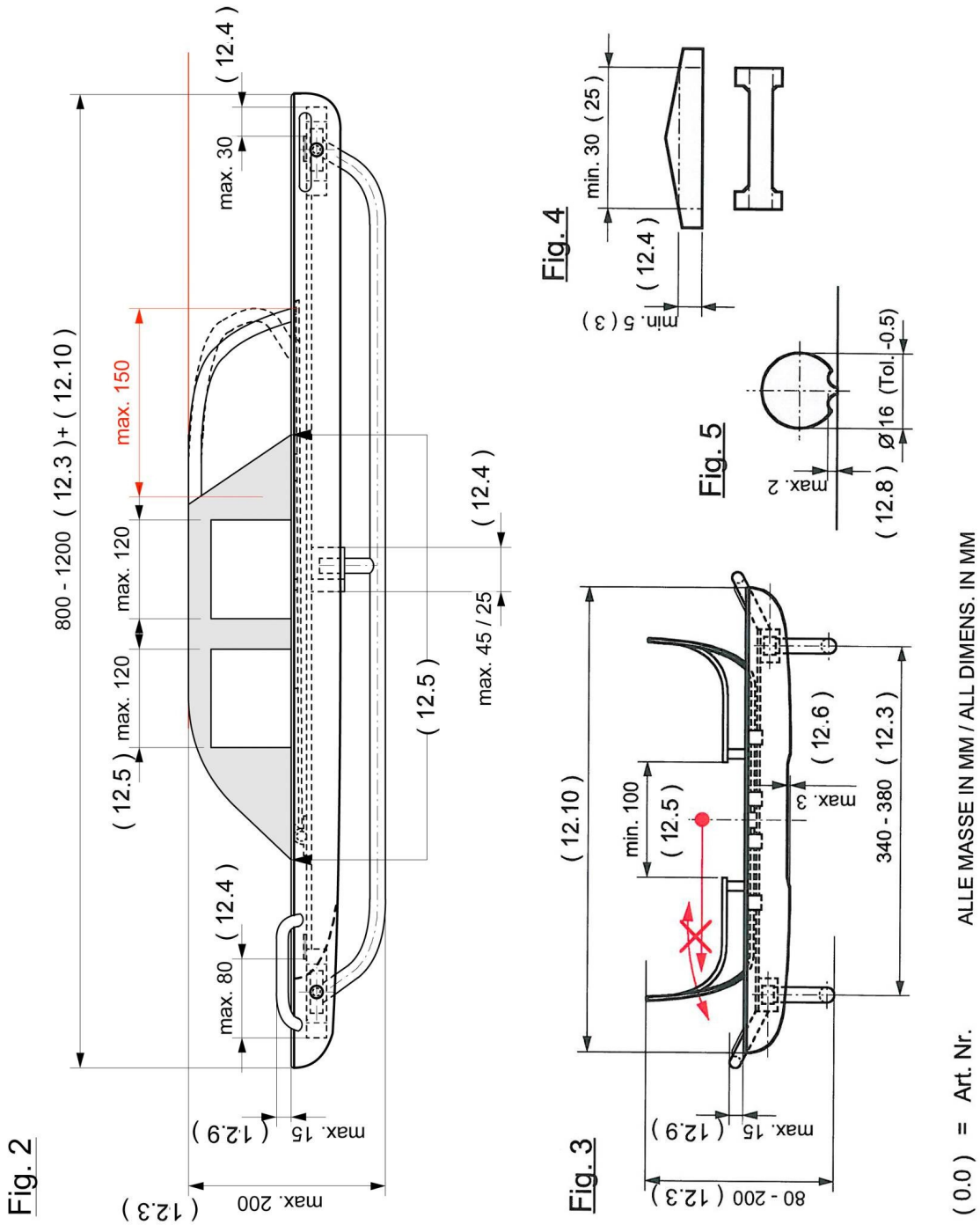
Fig. 2
800 - 1200 (12.3)+ (12.10)
max. 150
max. 120
max. 120
(12.5)
max. 30
(12.4)
max. 80
(12.4)
(12.5)
max. 45 / 25
(12.4)
max. 200
(12.3)
max. 15
(12.9)
Fig. 4
min. 30 (25)
(12.4)
min. 5 (3)
Fig. 5
max. 2
(12.8)
Ø16 (Tol.-0.5)
Fig. 3
(12.10)
min. 100
(12.5)
(12.6)
max. 3
340 - 380 (12.3)
80 - 200 (12.3)
max. 15
(12.9)
(0.0) = Art. Nr.
ALLE MASSE IN MM / ALL DIMENS. IN MM

Fig. 6 *(BEISPIELE / EXAMPLES)*

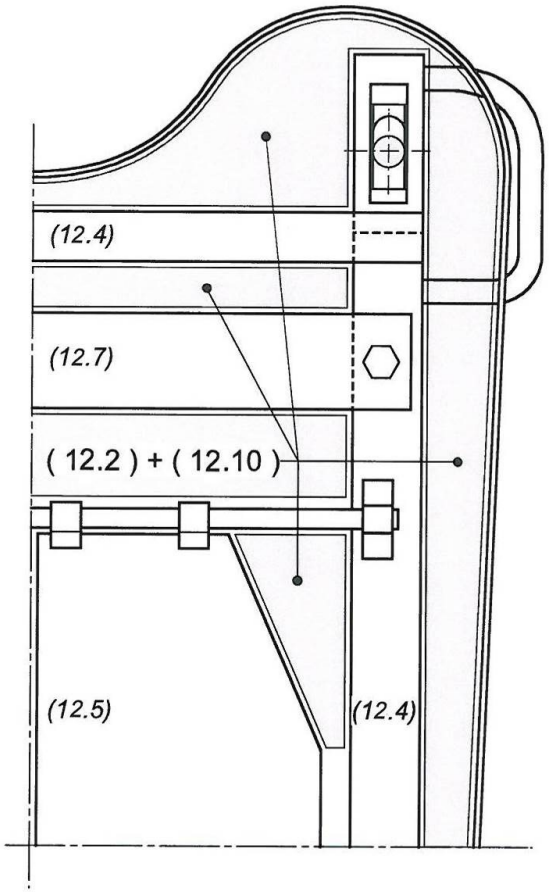

Fig. 7

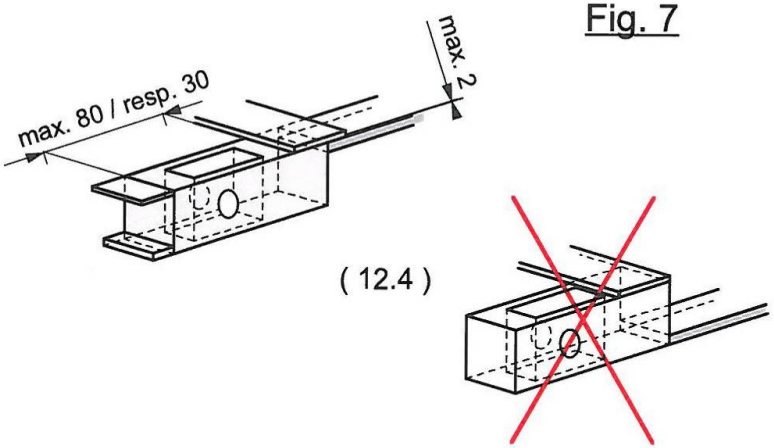

Fig. 8

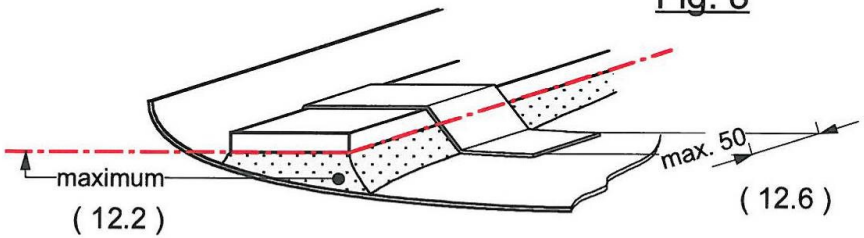

(0.0) = Art. Nr. ALLE MASSE IN MM / ALL DIMENS. IN MM

12.12 Equipment

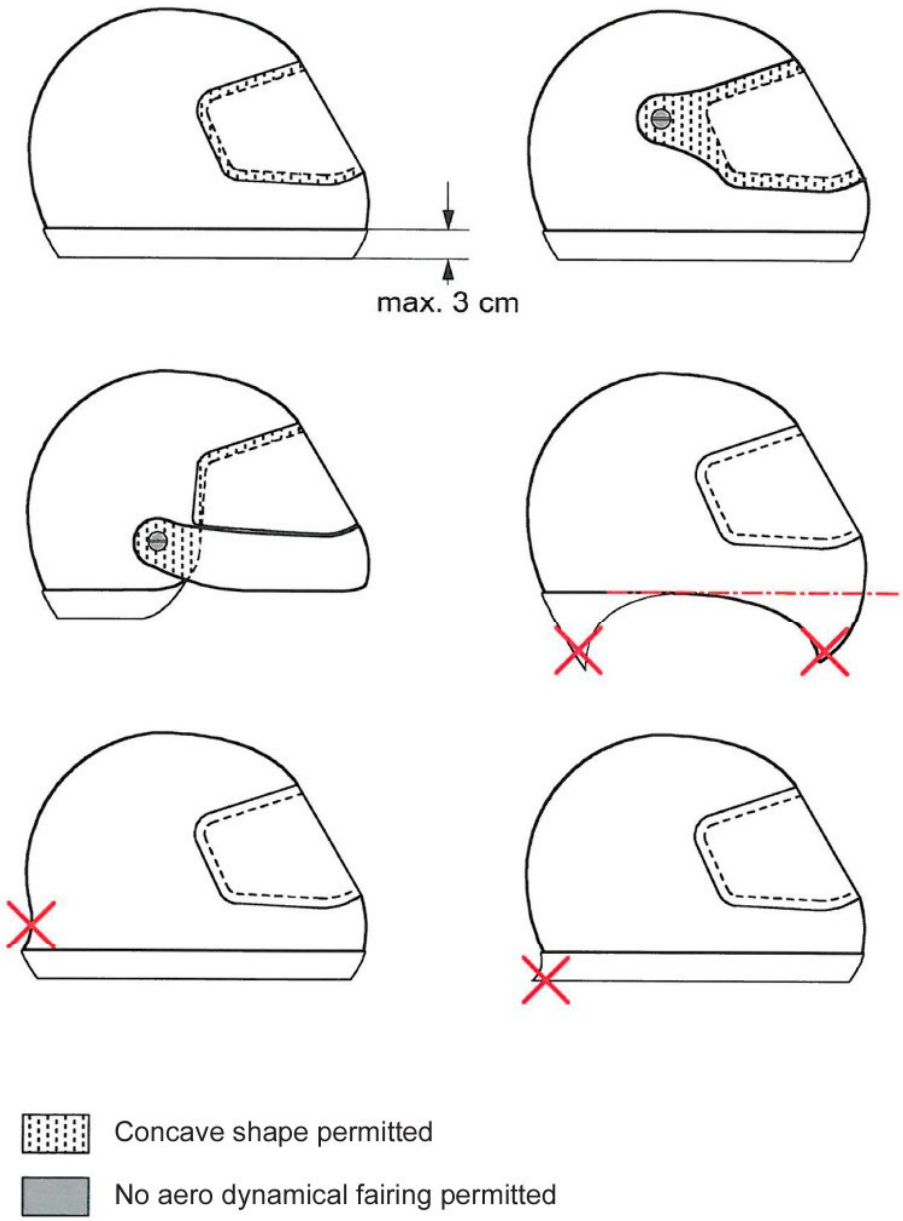

Drawing for article 10.16.1

13. MATERIAL SEIZURE

13.1 Procedure for the seizure of sled components for conformity tests

Empowered by the Jury and in the presence of at least one of its members, the IBSF Materials Committee responsible directs the official representative of the Federation to which the sled belongs to remove or disassemble the component(s) to be tested.

13.2 The Form

Upon collecting the component(s), the IBSF Materials Committee will fill in a form drawn up in six copies, stating:

- general data of the team / athlete whose sled is being tested
- the name of the competition and the venue
- the date and time
- a description of the component(s) taken
- the type of test(s) the laboratory is required to perform
- a blank space for entering the laboratory analysis results

The following people will sign the form:

- the Jury President
- the representative of the IBSF Materials Committee
- the team captain or official representative of the Federation to whom the sled belongs

The six copies of the form will be sent to the following:

- one copy to the Jury President
- one copy to the IBSF President (via the Secretary General)
- one copy to the Chairman of the IBSF Materials Committee
- one copy to the team captain or official representative of the Federation to whom the sled belongs
- two copies to the laboratory, together with the container holding the component(s) to be tested

By returning one of the two copies of the form to the IBSF Secretary General, the laboratory confirms that it has received the container undamaged.

13.3 The Container

The seized components will be sealed in a container.

13.4 Remarks

The IBSF bears the costs of the laboratory analysis. In case of positive analysis results, the IBSF can order the costs to be reimbursed by the Federation to whom the sled belongs.

PROTOCOL FOR SEIZURE OF SLED COMPONENTS FOR CONFORMITY TESTS

Place: _____ Date: _____ Time: _____ Competition: _____

Event: _____ Nation: _____

Description of component/s taken: _____

Test/s required: _____

Name of Laboratory: _____

Laboratory result: _____

President of Jury	Materials Commission	National Federation
Name: _____	Name: _____	Name: _____
Signatures: _____	_____	_____

The Laboratory _____ in the person of Mr. _____

acknowledges receipt of the official container bearing unbroken seals, from Mr.

_____ on (date) _____ at (time) _____

Stamp: _____

(signature)

14. ADVERTISING GUIDELINES AND DRAWINGS

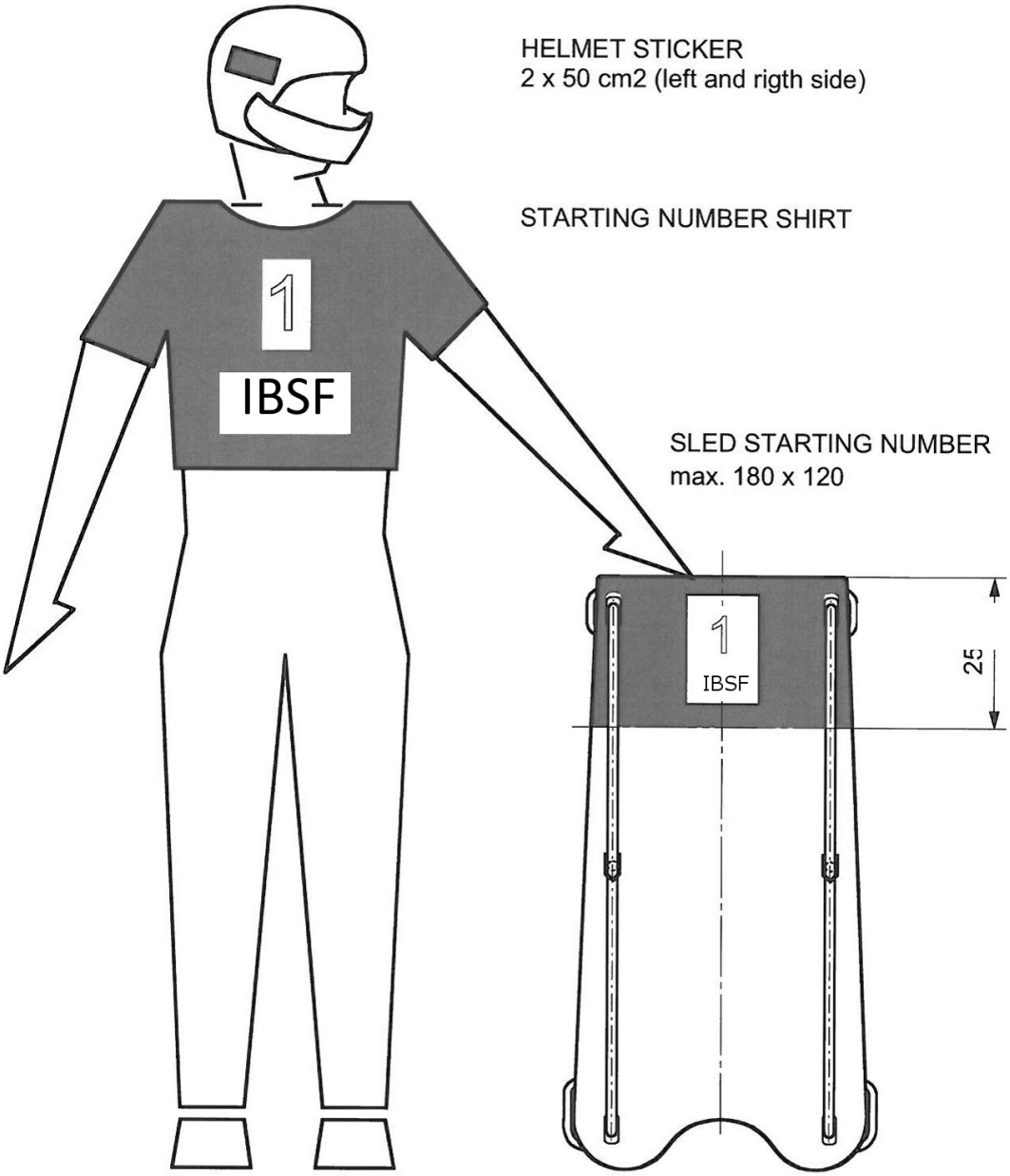

- IBSF properties / Fläche für IBSF
  - Aviable for NF's / Den NV zur Verfügung stehend

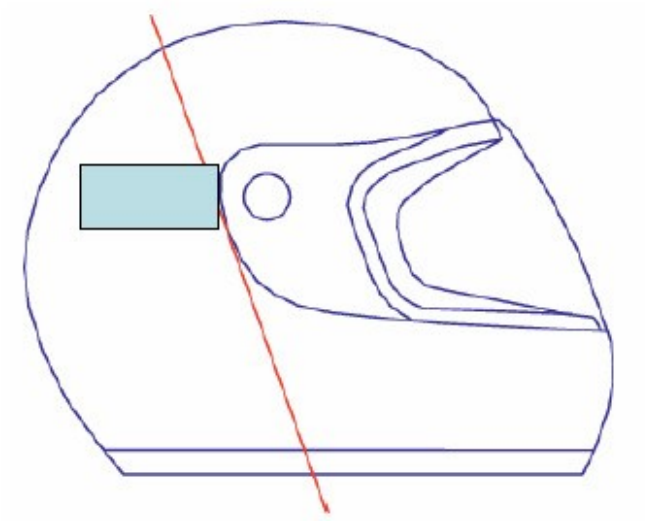

IBSF properties: helmet (bob & skeleton)
Left and right side of the helmet, as close as possible to the visor
Size: 50cm^2

15. FINAL CLAUSES

15.1 Coming into Force

This edition comes into force on October 1st, 2016.

15.2 Modifications

The IBSF Executive Committee determines modifications to the IBSF International Rules.

15.3 Interpretation

If an article in these Rules should be ambiguously defined so that multiple interpretations are possible, the interpretation should be used that matches the underlying meaning for which the article was written.

GLOSSARY

Term / Abbrevation	Definition
DSQ – Disqualified	A ruling by officials that an athlete or team has broken or failed to observe the rules of the sport and cannot be considered for placing in the competition.
DNS – Did Not Start	If an athlete or team has been drawn for the competition but did not start.
DNF – Did Not Finish	If an athlete or team does not cross the finish timing eye.
Member = National Federation = Nation	These three terms are used synonymously describing the National Federations that are Members of the IBSF representing their country internationally in bobsleigh and/or skeleton sport (IBSF events). They have to comply with IBSF Rules and Regulations.
Congress	The Congress is the highest authority of the IBSF, and it consists of the Delegates nominated by the Members and the Executive Committee.
Quota	A restriction that limits the number of participants in any IBSF competition and Olympic Winter Games.
Ranking List	A listing of athletes/teams according to IBSF system of rating for each series.
to be ranked	All athletes that finish the race without being classified as DNS, DNF or DSQ are being ranked in a race.
International Jury License	A formal permission from IBSF to a person to take part in the official IBSF competitions as a Jury President or Jury Member. To obtain it the candidate has to pass the International Jury Exam.
Abrasive	Material (e.g. sandpaper) used to polish the runners.
Gauge	An instrument used to measure the runner radius.
Electronic Measuring Devices	Any instruments used to measure speed, temperature, G-force etc.
OWG	Olympic Winter Games
WC	World Cup
WCH	World Championships
EC	Europe Cup
ECH	European Championships
ICC	Intercontinental Cup
NAC	North American Cup
ITP	International Training Period

THE INTERNATIONAL SKI COMPETITION RULES (ICR)

BOOK III
SKI JUMPING

APPROVED BY THE 48th INTERNATIONAL SKI CONGRESS, KANGWONLAND (KOR)

WEB EDITION OCTOBER 2013

FÉDÉRATION INTERNATIONALE DE SKI
INTERNATIONAL SKI FEDERATION
INTERNATIONALER SKI VERBAND

INTERNATIONAL SKI FEDERATION
FEDERATION INTERNATIONALE DE SKI
INTERNATIONALER SKI VERBAND

Blochstrasse 2; CH- 3653 Oberhofen / Thunersee; Switzerland

Telephone: +41 (33) 244 61 61
Fax: +41 (33) 244 61 71
Website: www.fis-ski.com

All rights reserved.
© Copyright: International Ski Federation FIS, Oberhofen, Switzerland, 2012.

Printed in Switzerland

Oberhofen, October 2013

Table of Contents

1st Section

200 Joint Regulations for all Competitions 3
201 Classification and Types of Competitions 3
202 FIS Calendar 5
203 Licence to participate in FIS Races (FIS Licence) 7
204 Qualification of Competitors 8
205 Competitors Obligations and Rights 9
206 Sponsorships and Advertising 10
207 Advertising and Commercial Markings 11
208 Exploitation of Electronic Media Rights 12
209 Film Rights 16

210 Organisation of Competition 16
211 The Organisation 16
212 Insurance 16
213 Programme 17
214 Announcements 17
215 Entries 18
216 Team Captains' Meetings 18
217 Draw 18
218 Publication of Results 19
219 Prizes 20

220 Team Officials, Coaches, Service Personnel, Suppliers and Firms' Representatives 21
221 Medical Services, Examinations and Doping 21
222 Competition Equipment 22
223 Sanctions 23
224 Procedural Guidelines 25
225 Appeals Commission 27
226 Violation of Sanctions 28

2nd Section

Joint Regulations for Ski Jumping Competitions 29

400 Organisation 29
401 The Competition Committee and Officials 29
402 The Jury and Competition Management 32
403 FIS Officials for Jury and Competition Management 33
404 Judges and Referees 37
405 The Nomination, Reimbursement, and Insurance of Competition Officials 40
406 The Age Classification of Competitors 43

410 The Jumping Hill 44
411 Standards for the Construction of Jumping Hills 44
412 Jumping Hills with Plastic Covering 49
413 Ski Flying Hills 49
414 The Approval of Jumping Hills 50
415 Measuring Devices 52
416 Information for Spectators and Facilities for Media Representatives 54
417 Snow Preparation 55

420 The Administration of the Competition 56
421 Entries, Draws, and the Admission of Reserves 56
422 The Competition 57
423 The Repetition of a Jump 58
424 Training on the Jumping Hill before the Competition 58

430 The Judging of the Ski Jump 59
431 The Judging of the Ski Jump Performance 59
432 The Measuring of Distance 61
433 The Calculating and Announcing of Results 62

440 Sanctions, Protests, Disciplinary Measures 63
441 Sanctions, Disqualifications 64
442 Protests 64
443 Disciplinary Measures 65

3rd Section

Regulations for the Administration of Specific Types of Competitions 66

450 Types of Ski Jumping Competitions 66
451 International Championships on Normal and Large Hills 66
452 International Competitions on One Hill (Normal or Large Hill) 67
453 Team Competitions for Ski Jumping 69
454 Ski Flying Competitions 69

200 Joint Regulations for all Competitions

200.1 All events in the FIS Calendar must be held under the applicable FIS Rules[1].

200.2 Organisation and Conduct

Rules and instructions for the organisation and conduct of the various competitions are to be found in their respective rules.

200.3 Participation

Competitions listed in the FIS Calendar are only open to all properly licensed competitors entered by their National Ski Associations in accordance with current quotas.

200.4 Special Regulations

The FIS Council can authorise a National Ski Association to adopt rules and regulations to organise national or international competitions with different grounds for qualification but only provided that they do not go beyond the limits laid down in the present rules.

200.5 Control

All competitions listed in the FIS Calendar must be supervised by a Technical Delegate of the FIS.

200.6 Every legal sanction imposed and published in respect of a competitor, official or trainer will be recognised by the FIS and the National Ski Associations respectively.

201 Classification and Types of Competitions

201.1 Competitions with Special Rules and/or Limited Participation

National Ski Associations affiliated with the FIS - or clubs belonging to these National Ski Associations with the approval of their association - may invite neighbouring National Ski Associations or their clubs to their own competitions. But these competitions must not be promulgated or announced as international competitions, and the limitation must be made clear in the announcement.

201.1.1 Competitions with special rules and/or limited participation or including non-members may be held under special competition rules as approved by the FIS Council. Any such rules must be published in the announcement.

201.2 Competitions with Non-Members of the FIS

The FIS Council can authorise one of its member National Ski Associations to invite a non-member organisation (military etc.) to competitions, or accept invitations from such an organisation.

[1] Throughout the ICR, the use of the masculine he/his, etc also includes the feminine she/her, etc

201.3 Classification of Competitions

201.3.1 Olympic Winter Games, FIS World Ski Championships and FIS World Junior Ski Championships

201.3.2 FIS World Cups

201.3.3 FIS Continental Cups

201.3.4 International FIS Competitions (FIS Races)

201.3.5 Competitions with Special Participation and/or Qualifications

201.3.6 Competitions with Non-Members of the FIS

201.4 FIS Disciplines

A discipline is a branch of a sport and may comprise one or several events. For example Cross-Country Skiing is a FIS Discipline, whereas the Cross-Country Sprint is an Event.

201.4.1 Recognition of Disciplines in the International Ski Federation

New disciplines, comprising one or several events, widely practised in at least twenty-five countries and on three continents may be included as part of the programme of the International Ski Federation.

201.4.2 Exclusion of Disciplines from the International Ski Federation

If a discipline is no longer practised in at least twelve National Ski Associations on at least two continents the FIS Congress may decide to exclude the discipline from the programme of the International Ski Federation.

201.5 FIS Events

An event is a competition in a sport or in one of its disciplines. It results in a ranking and gives rise to the award of medals and/or diplomas.

201.6 Types of Competitions

International competitions consist of:

201.6.1 Nordic Events

Cross-Country, Rollerskiing, Ski Jumping, Ski Flying, Nordic Combined, Team Competitions in Nordic Combined, Nordic Combined with Rollerskiing or In-line, Team Ski Jumping, Ski Jumping on plastic jumping hills, Popular Cross-Country races

201.6.2 Alpine Events

Downhill, Slalom, Giant Slalom, Super-G, Parallel Competitions, Combined, KO, Team Competitions

201.6.3 Freestyle Events

Moguls, Dual Moguls, Aerials, Ski Cross, Half Pipe, Slopestyle, Team Competitions

201.6.4 *Snowboard Events*
Slalom, Parallel Slalom, Giant Slalom, Parallel Giant Slalom, Super-G, Half Pipe, Snowboard Cross, Big Air, Slopestyle, Team Competitions

201.6.5 *Telemark Events*

201.6.6 *Firngleiten*

201.6.7 *Speed Skiing Events*
Speed 1 (S1), Speed Downhill (SDH), Speed Downhill Junior (SDH Jun)

201.6.8 *Grass Ski Events*

201.6.9 *Combined Events with other Sports*

201.6.10 *Children's, Masters, Disabled Events, etc.*

201.7 FIS World Championship Programme

201.7.1 To be included in the programme of the FIS World Championships, events must have a recognised international standing both numerically and geographically, and have been included for at least two seasons in the World Cup before a decision about their admission can be considered.

201.7.2 Events are admitted no later than three years before specific FIS World Championships.

201.7.3 A single event cannot simultaneously give rise to both an individual and a team ranking.

201.7.4 Medals may only be awarded at the FIS World Championships and FIS Junior World Championships in all disciplines (Alpine, Nordic, Snowboard, Freestyle, Grass Skiing, Rollerski, Telemark, Speed Skiing) when there are a minimum of 8 nations participating in team competitions and 8 nations represented in an individual event.

202 FIS Calendar

202.1 Candidature and Announcement

202.1.1 Each National Ski Association is entitled to present its candidature for the organising of the FIS World Ski Championships in accordance with the published "Rules for the Organisation of World Championships"

202.1.2 For all other competitions, the registrations for inclusion in the International Ski Calendar have to be made to FIS by the National Ski Association according to the Rules for the FIS Calendar Conference published by the FIS.

202.1.2.1 The applications of the National Ski Associations (NSA) have to be sent to FIS using the FIS Calendar program (ftp://ftp.fisski.ch/Software/Programs/) by 31st August (31st May for the Southern Hemisphere).

202.1.2.2 *Allocation of competitions*

Allocation of the competitions to the National Ski Associations is made through the electronic communication process between FIS and the National Ski Associations. In the case of FIS World Cup competitions, the calendars are subject to the approval of the Council, on proposal of the respective Technical Committee.

202.1.2.3 *Homologations*

Competitions that appear in the FIS Calendar may only take place on competition courses or jumping hills homologated by the FIS.
The homologation certificate number must be indicated when applying for the inclusion of competition in the FIS Calendar.

202.1.2.4 *Publication of the FIS Calendar*

The FIS calendar is published by FIS on the FIS website www.fis-ski.com. It will be updated to reflect cancellations, postponements and other changes continuously by FIS.

202.1.2.5 *Postponements*

In case of the postponement of a competition listed in the FIS Calendar, the FIS has to be informed immediately and a new invitation must be sent to the National Ski Associations, otherwise the competition cannot be considered for FIS points.

202.1.2.6 *Calendar Fees*

In addition to the annual subscription, a calendar fee is set by the FIS Congress and is due for each year and for each event listed in the FIS Calendar. For additional events, a 50% surcharge will be made in addition to the regular calendar fee for applications submitted 30 days before the date of the competition. The calendar fee for a competition that has to be rescheduled remains the responsibility for payment in full of the original organising National Ski Association.

At the beginning of the season, each NSA will receive an invoice for 70 % of its total invoice from the previous season. This amount will be debited from its FIS account. At the end of the season each NSA will receive a detailed invoice for all registered competitions during the season. The balance will be subsequently be debited or credited to the NSA account at FIS.

202.1.3 *Appointment of Race Organiser*

In the event that the National Ski Association appoints a race organiser, such as an affiliated ski club, it shall do so using the form “Registration Form National Ski Association and Organiser” or by means of a similar written agreement. An application by a National Ski Association for inclusion of an event on the International Ski Calendar shall mean that the necessary agreement to organise the event has been established.

202.2 Organisation of Races in other Countries

Competitions which are organised by other National Ski Associations may only be included in the FIS Calendar when the National Ski Association of the country concerned where the competitions will be organised gives its approval.

203 Licence to participate in FIS Races (FIS Licence)

A licence to participate in FIS races is issued by a National Ski Association to competitors who fulfil the criteria for participation through registering the competitor with FIS in the respective discipline(s).

203.1 The FIS licence year begins on July 1st and finishes on June 30th of the following year.

203.2 To be eligible for participation in FIS events, a competitor must have a licence issued by his National Ski Association. Such a licence shall be valid in the Northern and Southern hemispheres for the licence year only. The validity of a licence can be limited to participation in one specific country or in one or more specific events.

203.2.1 The National Ski Association must guarantee that all competitors registered with a FIS License to participate in FIS races accept the Rules of the International Ski Federation, in particular the provision which foresees the exclusive competence of the Court of Arbitration for Sport as the court of appeal in doping cases.

203.3 A National Ski Association may only issue a FIS licence to participate in FIS races when the competitor has proven his nationality and therefore eligibility by submitting a copy of his passport and signed the Athletes Declaration in the form approved by the FIS Council and returned it to his National Ski Association. All forms from under-age applicants must be counter signed by their legal guardians. Both the copy of the passport and signed Athletes Declaration must be made available to FIS on request.

203.4 During the FIS licence year, a competitor may only participate in International FIS competitions with a FIS licence to participate in FIS races issued by one National Ski Association.

203.5 Application for a change of FIS Licence Registration

All applications to change licence registration from one member National Ski Association to another are subject to consideration by the FIS Council at its Meetings in the spring. In principle an application to change licence registration will not be granted unless the competitor demonstrates his personal association with the new nation.

Prior to submitting an application to change licence registration a competitor must possess the citizenship and passport of the country for which he wishes to compete. In addition, the competitor must have had his principal legal and effective place of residence in the new country for a minimum of two (2) years immediately prior to the date of the request to change registration to the new country/National Ski Association. An exception to the two year residency rule may be waived if the competitor was born in the territory of the new country, or whose mother or father is a national of the new country. Applications will not be accepted if a parent has obtained a passport for the new country, but is not resident, and/or there is no family ancestry.

Furthermore the competitor is required to submit a detailed explanation with the application about his personal circumstances and the reason for requesting a change of licence registration.

203.5.1 If a competitor has already participated in FIS calendar events for a National Ski Association, he must have the written agreement to be released from the former National Ski Association in addition to the citizenship, passport and residency requirements in art. 203.5 before the new National Ski Association may submit a request to FIS for a change of registration.
If such a written agreement is not given, the competitor may not participate in any FIS calendar events for a period of twelve months from the end of the last season in which he competed for his present National Ski Association, nor may he be issued with a licence to participate in FIS races by the new National Ski Association.
These rules are also valid when a competitor has more than one nationality and would like to change National Ski Association licence registration.

203.5.2 The FIS Council reserves the right in its absolute discretion, to grant or to decline to grant, a change of licence notwithstanding the fulfilment of the aforementioned conditions where it deems it is contrary to the spirit of the rule and in the best interests of the International Ski Federation to do so (e.g. to decline to grant a change of licence if a member National Ski Association tries to “import” a competitor).

203.5.3 In the event that a competitor does not fulfil all the criteria required to apply for a change of National Ski Association licence registration, the onus shall be on the competitor to demonstrate in writing to the satisfaction of the FIS Council that exceptional circumstances exist and it is in the best interests of the International Ski Federation to grant the change.

203.5.4 A competitor will retain his FIS points if he changes his National Ski Association under the condition that the former National Ski Association granted the release of the competitor.

203.5.5 In the event that any of the documents for an application to change licence registration submitted by the National Ski Association (letter of release from the former National Ski Association, passport, residency papers) are found to be false, the FIS Council will sanction the competitor and the new National Ski Association.

204 Qualification of Competitors

204.1 A National Ski Association shall not support or recognise within its structure, nor shall it issue a licence to participate in FIS or national races to any competitor who:

204.1.1 has conducted himself in an improper or unsportsmanlike manner or has not respected the FIS medical code or anti-doping rules,

204.1.2 accepts or has accepted, directly or indirectly, any money-payments for the participation at competitions,

204.1.3 accepts or has accepted a prize of a higher value than fixed by article 219,

204.1.4 permits or has permitted his name, title or individual picture to be used for advertising, except when the National Ski Association concerned, or its pool for this purpose, is party to the contract for sponsorship, equipment or advertisements.

204.1.5 knowingly competes or has competed against any skier not eligible according to the FIS Rules, except if:

204.1.5.1 the competition is approved by the FIS Council, is directly controlled by the FIS or by a National Ski Association, and the competition is announced "open",

204.1.6 has not signed the Athletes Declaration,

204.1.7 is under suspension.

204.2 With the issuance of a licence to participate in FIS competitions and entry the National Ski Association confirms, that valid and sufficient accident insurance for training and competition is in place for the competitor and assumes full responsibility.

205 Competitors Obligations and Rights

205.1 The competitors are obliged to make themselves familiar with the appropriate FIS Rules and must comply with the additional instructions of the Jury. Competitors must also follow the FIS rules regulations.

205.2 Competitors are not permitted to use doping. (see FIS Anti-Doping Rules and Procedural Guidelines).

205.3 As stated in the Athletes Declaration, competitors have the right to inform the Jury of safety concerns they may have regarding the training and competition courses. More details are given in the corresponding discipline rules.

205.4 Competitors who do not attend the prize-giving ceremonies without excuse lose their claim to any prize including prize money.
In exceptional circumstances, the competitor may be represented by another member of his team, but this person has no right to take his place on the podium.

205.5 Competitors must behave in a correct and sportsmanlike manner towards members of the Organising Committee, volunteers, officials and the public.

205.6 Support for the Competitors

205.6.1 A competitor is registered with FIS by his National Ski Association to participate in FIS races may accept:

205.6.2 full compensation for travel cost to training and competition,

205.6.3 full reimbursement for accommodation during training and competitions,

205.6.4 pocket money,

205.6.5 compensation for loss of income according to decisions of his National Ski Association,

205.6.6 social security including insurance for training and competition,

205.6.7 scholarships.

205.7 A National Ski Association may reserve funds to secure a competitor's education and future career after retiring from active competitive skiing.
The competitor has no claim to these funds which shall be dispensed only according to the judgement of his National Ski Association.

205.8 Gambling on Competitions

Competitors, trainers, team officials and technical officials are prohibited from betting on the outcome of competitions in which they are involved.
Reference is made to the FIS Betting and other Anti-Corruption Violations Rules, July 2013.

206 Sponsorships and Advertising

206.1 A National Ski Association or its pool may enter into contracts with a commercial firm or organisation for financial sponsorship and or the supply of goods or equipment if the specific company or organisation is acknowledged as an Official Supplier or Sponsor by the National Ski Association.
Advertising using photographs, likeness or names of FIS competitors with any sportsman not eligible according to either the FIS eligibility rules or the eligibility rules of the IOC, is forbidden.
Advertising with or on competitors with tobacco or alcohol products or drugs (narcotics) is forbidden.

206.2 All compensation under such contracts must be made to the National Ski Association or its ski pool which shall receive the compensation subject to the regulations of each National Ski Association.
Competitors may not directly receive any part of such compensation except as stated in art. 205.6. The FIS may at any time call for a copy of the contract.

206.3 Equipment goods supplied to and used by the national team must, with reference to markings and trademarks, conform with the specifications stated in art. 207.

206.4 Competition Equipment at FIS Events

Only the competition equipment, according to the FIS rules on advertising, provided by the National Ski Association, complete with the commercial markings approved by the National Ski Association, may be worn in FIS World Cup and FIS World Ski Championship competitions. Obscene names and/or symbols on clothing and equipment are forbidden.

206.5 Competitors are not permitted to take off one or both skis or snowboard before crossing the red line in the finish area, as defined by the organiser.

206.6 At FIS World Ski Championships, FIS World Cups and all events of the FIS Calendar, a competitor is not allowed to take equipment (skis/board, poles, ski boots, helmet, glasses) to the official ceremonies which have anthems and/or flag raising. Holding/carrying equipment on the victory podium after conclusion of the whole ceremony (handing over trophies and medals, national anthems) for press photos, pictures, etc. is however permitted.

206.7 Winners presentation / Equipment on the podium

At FIS World Ski Championships and all events of the FIS Calendar, a competitor is allowed to take the following equipment on the podium:

- Skis / Snowboards
- Footwear: The athletes may wear their boots on their feet, but are not allowed to wear them anywhere else (such as around their neck). Other shoes cannot be taken on the podium during presentation except if they are worn on the feet.
- Poles: not on/around skis, normally in the other hand
- Goggles: either worn or around the neck
- Helmet: if worn only on the head and not on another piece of equipment, e.g. skis or poles
- Ski straps: maximum of two with name of the producer of skis; eventually one can be used for a wax company
- Nordic Combined and Cross-Country Ski Poles Clips. A clip can be used to hold the two poles together. The clip can be the width of the two poles, though not wider than 4 cm. The length (height) can be 10 cm. The long side of the clip is to be parallel to the poles. The commercial marking of the pole manufacturer can cover the entire surface of the clip.
- All other accessories are prohibited: waist bags with belt, phones on neckbands, bottles, rucksack/backpack, etc.

206.8 An unofficial presentation (flower ceremony) of the winner, and the winners ceremony immediately after the event in the event area with the national anthem even before the protest time has expired, is allowed at the organiser's own risk. Visible wearing of the starting bibs is mandatory.

206.9 Visible wearing of the starting bib of the event or other outerwear of the NSA is mandatory in the restricted corridor (including the leader board and TV interview locations).

207 Advertising and Commercial Markings

Technical Specifications about the size, the form and the number of commercial markings are decided by the FIS Council each spring for the following competition season and published by the FIS.

207.1 The rules covering advertising on equipment must be followed.

207.2 Any competitor who breaches the advertising rules is subject to sanction, as provided for in art. 223.1.1. An offence for which a sanction may apply and a penalty be imposed is defined as conduct that is in violation or non-observance of competition rules.

207.3 If a National Ski Association fails to enforce these rules or for any reason prefers to refer the case to the FIS, the FIS may take immediate steps to suspend a competitor's licence. The competitor concerned and/or his National Ski Association have the right to make an appeal before a final decision is taken.

207.4 If an advertiser uses the name, title or individual picture of a competitor in connection with any advertisement, recommendation or sale of goods without the approval or knowledge of the competitor, the competitor may give a "power of attorney" to his National Ski Association or to the FIS to enable them, if necessary, to take legal action against the company in question. If

the competitor concerned fails to do so, the FIS shall judge the situation as if the competitor had given permission to the company.

207.5 The FIS Council shall review if and how far infractions or breaches of rules have taken place in regard to qualification of competitors, sponsorship and advertising and support for the competitors.

207.6 In all competitions of the FIS Calendar (especially for the FIS World Cups) the "FIS Advertising Guidelines" must be observed in regard to advertising possibilities in the competition area, respectively in the TV area.
These "FIS Advertising Guidelines", approved by the FIS Council, are an integral part of the FIS contracts with cup organisers.

208 Exploitation of Electronic Media Rights

208.1 General Principles

208.1.1 *Olympic Winter Games and FIS World Championships*
All Media rights to the Olympic Winter Games and FIS World Championships belong to the IOC and to the FIS respectively, and are subject to separate contractual arrangements.

208.1.2 *Rights owned by the member National Ski Associations*
Each FIS affiliated National Ski Association that organises events in its country which are included in the annual FIS calendars, has the authority as the owner of the electronic media rights to enter into contracts for the sale of the electronic media rights on those events. In cases where a National Ski Association organises events outside its own country, these rules also apply, subject to bi-lateral agreement with the National Ski Association of the country where the event takes place.

208.1.3 *Promotion*
Contracts shall be prepared in consultation with the FIS with the intention of giving the widest promotion and exposure to the sports of skiing and snowboarding and considering the best interests of the National Ski Associations.

208.1.4 *Access to events*
For all competitions, admission of personnel and their equipment to the media areas will be limited to those having the necessary accreditation and access passes. Priority access will be given to rights holders and the system of accreditation and access control must avoid possible abuse by non-rights holders.

208.1.5 *Control by the FIS Council*
The FIS Council exercises control over the adherence to the principles of this Rule by National Ski Associations and all organisers. Should a contract or individual clauses thereof, create a major conflict of interest for the FIS, a member National Ski Association or its organiser, then this will be evaluated by the FIS Council. Full information will be provided so that the appropriate solution can be found.

208.2 **Definitions**

In the context of this rule the following definitions will apply:

“Electronic Media Rights” means the rights for Television, Radio, Internet and Mobile devices.

“Television rights” means the distribution of television images, both analogue and digital, comprising video and sound, by means of terrestrial transmitters, satellite, cable, fibre or wire for public and private viewing on television screens. Pay-per-view, subscription, interactive TV, video on demand services, IPTV or similar technologies, are also included in this definition.

“Radio rights” means the distribution and reception of radio programmes, both analogue and digital, over the air, by wire or via cable to devices, both fixed and portable.

“Internet” means access to images and sound through interconnected computer networks.

“Mobile and portable devices” means the provision of images and sound through a telephone operator and receivable on mobile telephone or other non fixed devices, such as Personal Digital Assistants.

208.3 **Television**

208.3.1 *Standard of production and promotion of competitions*

In the agreements concerning production with a TV organisation or agency acting as host broadcaster, the quality of TV transmissions for ski and snowboard events published in the FIS Calendar – especially for FIS World Cup competitions – must be considered. Of particular importance, while taking into consideration applicable national laws and rules affecting broadcasting, are:

a) Top quality and optimal production of a TV signal (for live or deferred transmission depending on the event) in which sport is the centrepiece;

b) Adequate consideration and appearance of venue advertising and event sponsors;

c) A standard of production in conformity with the FIS TV Production Guidelines and appropriate to current market conditions for the discipline and to the level of the FIS competition series. This means live coverage of the entire event including the winner presentation for live transmission (unless circumstances determine that a live production is not provided). This coverage shall be produced in a neutral way, shall not concentrate on any athlete or nation and shall show all competitors

d) The live international signal of the host broadcaster must include appropriate graphics in English, particularly the official FIS logo, timing and data information and results, and international sound.

e) Where it is appropriate to the individual TV market, there should be live TV transmission in the country where the event takes place and in other countries with a high interest.

208.3.2 *Production and Technical costs*

Except when otherwise agreed between the National Ski Association and the agency/company managing the rights, the cost of producing the television signal for the exploitation of the different rights will be borne by the broadcaster having acquired the rights in the country where the competition takes place or a production company mandated to produce the signal by the company owning the rights. In certain cases, the organiser or the National Ski Association may assume these costs.

For each of the different rights granted under this rule the technical expenses that are to be paid for by those organisations that have acquired the rights and which are seeking to access the television signal (original picture and sound without commentary), have to be agreed between the producing company or the agency/company managing the rights, as applicable. This also applies to any other production costs that may be requested.

208.3.3 *Short extracts*

Short extracts granting news access for non-rights holders are to be provided to television companies according to the following rules. It is noted that in a number of countries national legislation governs the showing of short extracts in news programmes.

These extracts may only be used in regularly scheduled news programmes and cannot be kept for archive purposes

a) In those countries where legislation exists regarding news access to sporting events then this legislation will always hold precedence for reporting on FIS events.

b) In those countries where no legislation exists regarding news access by competing networks and provided that agreements between the company managing the rights and the primary rights holder take precedence then short extracts of a maximum of 90 seconds news access will be granted to competing networks by the agency/company managing the rights for transmission four hours after the rights holding network has shown the competition. The use of this material will cease 48 hours after the end of the competition. If the rights holding network delays its transmissions by more than 72 hours from the end of the competition, then competing networks can show extracts of a maximum of 45 seconds commencing 48 hours after and ending 72 hours after the event itself. Any request to exploit short extracts shall be addressed to the agency/company managing the rights which shall grant to the broadcasters access to the short extracts subject to agreement regarding the technical costs incurred to receive the material.

c) In those countries where no transmission rights have been purchased by a television company, all television organisations will be able to transmit short extracts of 45 seconds as soon as the material is available, subject to agreement with the agency/company managing the rights regarding the technical costs to be incurred to receive the material. Permission for the use of this material will expire after 48 hours.

d) Short extracts will be produced by the host broadcaster or the agency/company managing the rights and distributed by that agency/company, taking into consideration 208.3.2 above.

208.4 **Radio**

The promotion of FIS events through radio programmes will be encouraged by making available accreditation to the principle radio station(s) in each interested country. Access to the venue will be granted solely to those radio organisations that have obtained the necessary contractual authorisation from the rights holder, and will be only for the production of radio (audio) programmes. If accepted by national practice and the authorisation is granted, these programmes can also be distributed on the internet site of the radio station.

208.5 **Internet**

Unless the contract for the sale of the Electronic Media Rights on FIS events states otherwise, each television rights holder that also acquires the internet rights, will ensure that video streams from its website other than short extracts are geoblocked against access from outside its own territory. Regularly scheduled news bulletins containing material of FIS events may be streamed on the rights holding broadcaster's website, provided no changes are made to the bulletin as transmitted in the original programme.

Video and audio material produced in public areas where accreditation, tickets or other permissions are not required to gain access must not contain race footage. It is recognised that new technology provides members of the public with the possibility to produce unauthorised video recordings that may be posted on websites. Appropriate information advising that the unauthorised production and use of video material is prohibited and that legal proceedings could be taken, will be shown at all entrances and printed on entrance tickets.

All National Ski Associations and the rights holders/agencies will give permission for short extracts to be placed on the FIS website for non-commercial use subject to the following conditions:

a) When short extracts have not been acquired for Internet distribution the maximum duration of the news material from FIS competitions will be 30 seconds per discipline/per session and will be accessible on the FIS website until 48 hours after the end of the competition. The financial conditions relating to the provision of this material will be agreed between the FIS and the rights owner.

b) The material will be provided by the rights owner or host broadcaster as soon as possible, but at the latest six hours after the end of the competition.

208.6 **Mobile and portable devices**

In the cases where the rights for distribution by mobile and portable devices have been awarded, the rights purchaser/operator will be free to produce from the television signal the content it considers best meets the needs of its customers. Any live streaming of television programmes on a national basis using these devices shall not be altered from that available through other distribution channels.

In countries where no mobile distribution rights have been sold, short extracts or clips of a maximum duration of 20 seconds will be offered to operators when the material has been produced and for a period of 48 hours on the condition that the operators pay all related technical costs to the agency/company managing the rights.

208.7 Future developments

The principles contained in this Rule 208 shall be the basis for the exploitation of Electronic Media Rights to FIS events in the future. The FIS Council, on the recommendation of the National Ski Associations, the relevant commissions and experts, will establish the conditions considered appropriate to each new development.

209 Film Rights

All agreements regarding film productions of FIS competitions will be between the film producer and the National Ski Association or the company managing the related rights. All contractual arrangements regarding the exploitation of other media rights will be respected.

210 Organisation of Competition

211 The Organisation

211.1 The Organiser

211.1.1 The Organiser of a FIS competition is the person or group of persons who make the necessary preparations and directly carry out the running of the competition in the resort.

211.1.2 If the National Ski Association itself is not the competition organiser, it may appoint an affiliated club to be the organiser.

211.1.3 The organiser must ensure that accredited persons accept the regulations regarding the competition rules and Jury decisions, and in World Cup races the organiser is obliged to obtain the signature of all persons who do not have a valid FIS season accreditation to this effect.

211.2 The Organising Committee

The Organising Committee consists of those members (physical or legal) who are delegated by the organiser and by the FIS. It carries the rights, duties and obligations of the organiser.

211.3 Organisers which hold competitions involving competitors not qualified under art. 203 - 204 have violated the International Competition Rules and measures are to be taken against them by the FIS Council.

212 Insurance

212.1 The organiser must take out liability insurance for all members of the Organising Committee. The FIS shall provide its employees and appointed officials, who are not members of the Organising Committee (e.g. equipment controller, medical supervisor, etc.), with liability insurance when they are acting on behalf of the FIS.

212.2 Before the first training day or competition, the organiser must be in possession of a binder or cover notes issued by a recognised insurance company and present it to the Technical Delegate. The Organising Committee requires liability insurance with coverage of at least CHF 1 million; whereby it is recommended that this sum is at least CHF 3 million; this sum can be increased according to decisions of the FIS Council (World Cup etc).
Additionally, the policy must explicitly include liability insurance claims by any accredited participant, including competitors, against any other participant including but not limited to officials, course workers, coaches, etc

212.3 The Organiser respectively its' National Ski Association may request the FIS insurance broker to arrange cover for the competition (at the cost of the Organiser) if the organiser does not have the necessary insurance cover in place.

212.4 All competitors participating in FIS events must carry accident insurance, in sufficient amounts to cover accident, transport and rescue costs including race risks. The National Associations are responsible for adequate insurance coverage of all their competitors sent and inscribed by them.
The National Ski Association or their competitors must be able to show proof of the respective insurance coverage at any time on request of the FIS, one of its representatives or the organising committee.

213 Programme

A programme must be published by the organisers for each competition listed in the FIS Calendar which must contain the following:

213.1 name, date and place of the competitions, together with information on the competition sites and the best ways of reaching them,

213.2 technical data on the individual competitions and conditions for participation,

213.3 names of principal officials,

213.4 time and place for the first team captains' meeting and the draw,

213.5 timetable for the beginning of the official training and the start times,

213.6 location of the official notice board,

213.7 time and place for the prize-giving,

213.8 final date of entry and address for entries, including telephone, telefax and e-mail address.

214 Announcements

214.1 The Organising Committee must publish an announcement for the event. It must contain the information required by art. 213.

214.2 Organisers are bound by the rules and decisions of the FIS in limiting the number of entries. A further reduction in entries is possible under art. 201.1 provided it is made clear in the announcement.

214.3 Postponements or cancellations of competitions and programme alterations must be communicated immediately by telephone, e-mail or telefax to the FIS, all invited or entered National Ski Associations and the appointed TD. Competitions moved to an earlier date must be approved by the FIS.

215 Entries

215.1 All entries must be sent so that the Organising Committee receives them before the final date of entry. The organisers must have a final and complete list not later than 24 hours before the first draw.

215.2 National Ski Associations are not permitted to enter and draw the same competitors in more than one competition on the same date.

215.3 Only National Ski Associations are entitled to make entries for international competitions. Every entry should include:

215.3.1 code number, name, first name, year of birth, National Ski Association;

215.3.2 an exact definition of the event for which the entry is made.

215.4 Entries for FIS World Championships (see Rules for the Organisation of FIS World Championships).

215.5 The entry of a competitor by the National Ski Association for a race shall constitute a contract solely between the competitor and the organiser and shall be governed by the Athletes Declaration.

216 Team Captains' Meetings

216.1 The time and location of the first team captains' meeting and of the draw must be shown in the programme. The invitations for all other meetings have to be announced to the team captains at their first meeting. Emergency meetings must be announced in good time.

216.2 Representation by a substitute from another nation during discussions at team captains' meetings is not allowed.

216.3 The team captains and trainers must be accredited by the organisers according to quota.

216.4 Team captains and trainers must obey the ICR and the decisions of the Jury and must behave in a proper and sportsmanlike manner.

217 Draw

217.1 Competitors' starting order for each event and each discipline is decided according to a specific formula by draw and/or point order.

217.2 The competitors entered by a National Ski Association will only be drawn if provided written entries have been received by the organiser before the closing date.

217.3 If a competitor is not represented at the draw by a team captain or trainer, he will only be drawn if it is confirmed by telephone, telegram, e-mail or telefax by the beginning of the meeting that the competitors who are entered will participate.

217.4 Competitors who have been drawn and are not present during the competition must be named by the TD in his report, indicating if possible the reasons for absence.

217.5 Representatives of all the nations taking part must be invited to the draw.

217.6 If a competition has to be postponed by at least one day, the draw must be done again.

218 Publication of Results

218.1 The unofficial and official results will be published in accordance with the rules for the specific event.

218.1.1 *Transmission of Results*

For all international competitions, there must be direct communication between the Start and the Finish. In Olympic Winter Games the communications must be assured by fixed wiring.

In the data service area, access to the internet (at least ADSL speed) is required for World Cup, World Championships and Olympic Winter Games competitions.

218.2 The data and timing generated from all FIS competitions is at the disposal of FIS, the organiser, the National Ski Association and participants for use in their own publications, including websites. Use of data and timing on websites is subject to the conditions laid down in the FIS Internet Policies.

218.3 FIS Internet Policies and Exchange of Data relating to the FIS Competitions

218.3.1 *General*

As part of the ongoing promotion of skiing and snowboard, the International Ski Federation encourages and appreciates the efforts made by the National Ski Associations to provide messages and information to their members and fans. An increasingly important medium for this provision of information is through the Internet.

The following policy has been established in order to assist National Ski Associations through the provision of data from FIS competitions, and to clarify certain conditions that relate to the use and presentation of the data from FIS competitions.

218.3.2 *FIS Calendar data*

A specific FIS Calendar programme has been developed for the free use of National Ski Associations and other third parties. An updated Fiscal zip file containing revised calendar information will be available every week from the ftp site: ftp://ftp.fisski.ch for uploading into the FIS Calendar programme.

Thereafter it may be exported into National Ski Association's own software if necessary for planning purposes, etc. This data may not be passed on to third parties or organisation for commercial use.

218.3.3 *Results and Standings*

National Ski Associations can obtain official results, after they have been approved by the FIS Points verification procedure at the FIS Office. This data will be available on request to the FIS IT Manager who will provide the necessary instructions and/or routines on a case-by-case basis. The FIS World Cup results will include a credit to the results service providers. Standings from the various Cup series will also be available after receipt from the results service providers in the case of the FIS World Cup, or they have been input manually for other Cup series.

1. The results and data from FIS competitions may only be used on the National Ski Associations', Organisers' and participants' websites and may not be passed on for commercial use to third parties or organisations.
   The National Ski Association may download the data into its' own software for evaluating performances, etc.

2. National Ski Associations who wish to display results on their website, but do not have a database structure to upload the raw data can create a link to the relevant page of the FIS website. The exact addresses can be obtained from the FIS IT Manager.

3. A link will be established from the FIS Website to all National Ski Associations with their own website, as well as the ski industry and relevant media websites on requests. A reciprocal link to the FIS website should also be created.

218.3.4 *Organisers access to results*

Organisers of FIS World Cup races can obtain official results from their races after they have been approved by the FIS Points verification procedure in the results database. The upload is a computer-automated procedure for World Cup races and takes place immediately after the end of the race.

The pdf file containing the results and standings can be downloaded from www.fis-ski.com and from ftp://ftp.fisski.ch/ followed by the discipline code and the name of the site: AL (Alpine), CC (Cross-Country), JP (Ski Jumping), NK (Nordic Combined); SB (Snowboarding), FS (Freestyle) etc. The individual competition can be identified by the competition codex as published on the detailed page of the calendar on www.fis-ski.com.

219 Prizes

219.1 The detailed rules concerning the awarding of prizes will be published by the FIS. Prizes shall consist of mementos, diplomas, cheques or cash. Prizes for records are forbidden. The FIS Council decides in the autumn on the minimum respectively maximum values of the prize money approximately one and a half years before the competition season. The organisers have to inform the FIS by October 15th of the amount.

219.2 If two or more competitors finish with the same time or receive the same points, they shall be given the same placing. They will be awarded the same prizes, titles or diplomas. The allocation of titles or prizes by drawing lots or by another competition is not allowed.

219.3 All prizes are to be awarded no later than the final day of a competition or event series.

220 Team Officials, Coaches, Service Personnel, Suppliers and Firms' Representatives

In principle these regulations apply to all disciplines, taking into consideration the special rules.

220.1 The Organising Committee of an event must provide the Technical Delegate with a list of persons accredited to the competition.

220.2 It is forbidden for suppliers and for persons in their service to advertise inside the restricted area or to wear clearly visible commercial markings on their clothing or equipment which do not conform with art. 207.

220.3 Team officials accredited service personnel and suppliers receive from the FIS an official FIS accreditation and must perform their specified function. The individual organisers are free to accredit additional company representatives or other important persons.

220.4 Only persons who have the official FIS accreditation or a special accreditation from the organiser for course or jumping-hill have access to the courses and jumping-hills (according to special rules of the discipline).

220.5 The Different Types of Accreditation

220.5.1 Technical Delegates, the Jury, and the persons mentioned in art. 220 with clearly visible accreditation have access to the courses and jumping-hills.

220.5.2 Servicemen attached to teams are permitted entry to start area and service area at the finish. They are not allowed entry to the courses or jumping-hills.

220.5.3 Company representatives accredited at the discretion of the organisers who do not have FIS accreditation are not permitted entry to the courses and restricted service areas.

221 Medical Services, Examinations and Doping

221.1 National Ski Associations are responsible for the fitness of their competitors to race. All competitors, male and female are required to undergo a thorough evaluation of their medical health. This evaluation is to be conducted within the competitor's own nation.

221.2 If requested by the FIS Medical Committee or its representative, competitors must undergo a medical examination before or after the competition.

221.3 Doping is forbidden. Any offence under these FIS Anti Doping Rules will be punished under the provisions of the FIS Anti-Doping Rules.

221.4 Doping controls may be carried out at any FIS competition (as well as out-of competition). Rules and procedures are published in the FIS Anti-Doping Rules and FIS Procedural Guidelines.

221.5 Gender of the Competitor

If any question or protest arises as to the gender of the competitor, FIS shall assume responsibility for taking the necessary steps to determine the gender of the competitor.

221.6 Medical Services Required from Event Organisers

The health and safety of all those involved in a FIS competition is a primary concern of all event Organisers. This includes the competitors as well as volunteers, course workers and spectators.

The specific composition of the medical support system is dependent on several variables:

- The size, level, type of the event being held (World Championships, World Cup, Continental Cup, FIS-level, etc.) together with the local medical standards of care and geographic locations and circumstances.
- The estimated number of competitors, support staff and spectators
- The scope of responsibility for the Event Medical Organisation (competitors, support staff, spectators) should also be determined.

The Organiser / The Chief of Medical and Rescue Services must confirm with the race director or technical delegate that the required rescue facilities are in place before starting the official training or competition. In the event of an incident, or issue that prevents the primary medical plan from being utilized, the back up plan must be in place before recommencing the official training or competition.

The specific requirements concerning facilities, resources, personnel and team physicians are contained in the respective discipline rules and the FIS Medical Guide.

222 Competition Equipment

222.1 A competitor may only take part in a FIS competition with equipment which conforms to the FIS Regulations. A competitor is responsible for the equipment that he uses (skis, snowboard, bindings, ski boots, suit, etc). It is his duty to check that the equipment he uses conforms to the FIS specifications and general safety requirements and is in working order.

222.2 The term competition equipment encompasses all items of equipment which the competitor uses in competitions. This includes clothing as well as apparatus with technical functions. The entire competition equipment forms a functional unit.

222.3 All new developments in the field of competition equipment must be approved in principle by the FIS.

The FIS does not take any responsibility for the approval of new technical developments, which at the time of introduction may contain unknown risk to the health or cause an increase in the risk of accidents.

222.4 New developments must be submitted by May 1st, at the latest, for the following season. The first year new developments can only be approved provisionally for the following season and must be finally confirmed prior to the subsequent competition season.

222.5 The Committee for Competition Equipment publishes equipment by-laws after approval by the FIS Council (definitions or descriptions of the equipment items which are allowed).
In principle unnatural or artificial aids which modify the performance of the competitors and/or constitute a technical correction of the individual's physical predisposition to a defective performance, as well as competition equipment which impact the health of the competitors or increase the risk of accidents are to be excluded.

222.6 Controls

Before and during the competition season or on submission of protests to the Technical Delegate at the competition concerned, various controls can be carried out by members of the Committee for Competition Equipment or official FIS Equipment Controllers. Should there be a well-founded suspicion that regulations were violated, the equipment items must be confiscated immediately by the controllers or Technical Delegates in the presence of witnesses and be forwarded sealed to the FIS, which will submit the items to a final control by an officially recognised institution. In cases of protest against items of the competition equipment, the losing party will bear the investigation costs.
No testing of equipment or material in independent laboratories may be requested at races where a FIS Technical Expert has performed the controls, unless it can be demonstrated that the controls have not been carried out according to the rules.

222.6.1 At all FIS events where official FIS measurement experts using the official FIS measurement tools are appointed, the result of measurements carried out at the time are valid and final, irrespective of previous measurements.

223 Sanctions

223.1 General Conditions

223.1.1 An offence for which a sanction may apply and a penalty be imposed is defined as conduct that:

- is in violation or non-observance of competition rules, or
- constitutes non-compliance with directives of the jury or individual members of the jury in accordance with 224.2 or
- constitutes unsportsmanlike behaviour

223.1.2 The following conduct shall also be considered an offence:

- attempting to commit an offence
- causing or facilitating others to commit an offence
- counselling others to commit an offence

223.1.3 In determining whether conduct constitutes an offence consideration should be given to:

- whether the conduct was intentional or unintentional,
- whether the conduct arose from circumstances of an emergency

223.1.4 All FIS affiliated associations, including their members registered for accreditation, shall accept and acknowledge these rules and sanctions imposed, subject only to the right to appeal pursuant to the FIS Statutes and ICR

223.2 Applicability

223.2.1 *Persons*

These sanctions apply to:

- all persons who are registered with or accredited by the FIS or the organiser of an event published in the FIS calendar (an event) both within and outwith the confines of the competition area and any location connected with the competition, and
- all persons who are not accredited, within the confines of the competition area

223.3 Penalties

223.3.1 *The commission of an offence may subject a person to the following penalties:*

- Reprimand - written or verbal
- Withdrawal of accreditation
- Denial of accreditation
- Monetary fine not more than CHF 100’000.--
- A time penalty

223.3.1.1 FIS-affiliated associations are liable to the FIS for the payment of any fines and incurred administrative expenses imposed on persons whose registration or accreditation they arranged.

223.3.1.2 Persons not subject 223.3.1.1 also are liable to the FIS for fines and incurred administrative expenses. If such persons do not pay these fines, they shall be subject to a withdrawal of any permission to apply for accreditation to FIS events for a period of one year.

223.3.1.3 Payment of fines is due within 8 (eight) days following their imposition.

223.3.2 *All competing competitors may be subject to the following additional penalties:*

- Disqualification
- Impairment of their starting position
- Forfeiture of prizes and benefits in favour of the organiser
- Suspension from FIS events

223.3.3 A competitor shall only be disqualified if his mistake would result in an advantage for him with regard to the end result, unless the Rules state otherwise in an individual case.

223.4 A jury may impose the penalties provided in 223.3.1 and 223.3.2, however they may not impose a monetary fine of more than CHF 5'000.-- or suspend a competitor beyond the FIS event at which the offence occurred.

223.5 The following Penalty decisions may be given verbally:

- reprimands
- the withdrawal of accreditation for the current event from persons who had not been registered with the organiser through their National Associations
- the withdrawal of the accreditation for the current event from FIS-accredited persons

- the denial of accreditation to the current event from persons who are within the confines of the competition area or any other location connected with the competition.

223.6 **The following Penalty decisions shall be in writing:**

- monetary fines
- disqualification
- impaired starting position
- competition suspensions
- withdrawal of accreditation from persons who had been registered through their National Association
- withdrawal of accreditation of FIS accredited persons

223.7 Written Penalty decisions must be sent to the offender (if it is not a competitor), the offender's National Association and the Secretary General of FIS.

223.8 Any disqualification shall be recorded in the Referee's and/or the TD`s Report.

223.9 All penalties shall be recorded in the TD's Report.

224 Procedural Guidelines

224.1 **Competence of Jury**

The Jury at the event has the right to impose sanctions according to the above rules by majority vote. In the case of a tie, the chairman of the Jury has the deciding vote.

224.2 Within the location, especially during the training and the competition period, each voting Jury member is authorised to issue oral reprimands and withdraw the accreditation which is issued for the current event.

224.3 **Collective Offences**

If several persons commit the same offence at the same time and under the same circumstances, the Jury's decision as to one offender may be considered binding upon all offenders. The written decision shall include the names of all offenders concerned, and the scope of the penalty to be assessed upon each of them. The decision will be delivered to each offender.

224.4 **Limitation**

A person shall not be sanctioned if proceedings to invoke such sanction have not been commenced against that person within 72 hours following the offence.

224.5 Each person who is a witness to an alleged offence is required to testify at any hearing called by the Jury, and the Jury is required to consider all relevant evidence.

224.6 The Jury may confiscate objects that are suspected of being used in violation of equipment guidelines.

224.7 Prior to the imposition of a penalty (except in cases of reprimands and withdrawal of accreditation according to 223.5 and 224.2), the person accused of an offence shall be given the opportunity to present a defence at a hearing, orally or in writing.

224.8 All Jury decisions shall be recorded in writing and shall include:

224.8.1 The offence alleged to have been committed

224.8.2 The evidence of the offence

224.8.3 The rule (s) or Jury directives that have been violated

224.8.4 The penalty imposed.

224.9 The penalty shall be appropriate to the offence. The scope of any penalty imposed by the Jury must consider any mitigating and aggravating circumstances.

224.10 Remedies

224.10.1 Except as provided for in 224.11, a penalty decision of the Jury may be appealed in accordance with the provisions in the ICR.

224.10.2 If an appeal is not filed within the deadline established in the ICR, the penalty decision of the Jury becomes final.

224.11 The following decisions of the Jury are not subject to appeal:

224.11.1 Oral penalties imposed under 223.5 and 224.2

224.11.2 Monetary fines less than CHF 1'000.-- (One Thousand Swiss Francs) for single offence and a further CHF 2'500.-- for repeated offences by the same person.

224.12 In all remaining cases, appeals are to be directed to the Appeals Commission, as per the ICR.

224.13 The Jury shall have the right to submit to the Appeals Commission recommendations for penalties in excess of monetary fines of CHF 5'000.- and suspensions beyond the event in which the offence occurred (223.4).

224.14 FIS Council shall have the right to submit to the Appeals Commission comments with respect to any written penalty decisions by the Jury.

224.15 Costs of Proceedings

Fees and cash expenses, including travel expenses (costs of the proceedings) are to be calculated comparable to costs paid to TD's and are to be paid by the offender. In the case of a reversal of Jury decisions, in whole or in part, the FIS covers all costs.

224.16 Enforcement of Monetary Fines

224.16.1 The FIS oversees the enforcement of monetary fines and the costs of proceedings. Enforcement costs are considered costs of the proceedings.

224.16.2 Any outstanding monetary fines imposed on an offender is considered a debt of the National Association to which the offender is a member.

224.17 Benefit Fund

All monetary fines are paid into the FIS Youth Promotion Fund.

224.18 These rules are not applicable to any violation of FIS Doping rules.

225 Appeals Commission

225.1 Appointments

225.1.1 The FIS Council shall appoint from the Discipline Sub-committee for Rules (or Discipline Committee if there is no Rules Sub-Committee) a Chairman and a Vice Chairman of the Appeals Commission. The Vice Chairman shall preside when the Chairman is either unavailable or is disqualified for bias and prejudice.

225.1.2 The Chairman shall appoint 3 members, which may include himself, to the Appeals Commission from the Discipline Rules Sub-Committee or Discipline Committee for each case appealed or submitted to be heard, whose decisions shall be by majority vote.

225.1.3 To avoid either actual bias and prejudice or the appearance of bias and prejudice, members appointed to an Appeals Commission shall not be members of the same National Association as the offender whose case is under appeal. In addition, members appointed to an Appeals Commission must report voluntarily to the Chairman any bias and prejudice they may hold for or against the offender. Persons who are biased and prejudiced shall be disqualified from serving on the Appeals Commission by the Chairman or, in the event the Chairman is disqualified, by the Vice Chairman.

225.2 Responsibility

225.2.1 The Appeals Commission shall only hold hearings with respect to appeals by offenders or by the FIS Council from decisions of competition juries, or matters referred to it by competition juries recommending penalties in excess of those provided for in the Sanction rules.

225.3 Procedures

225.3.1 The Appeal must be decided within 72 hours of receipt of the Appeal by the Chairman, unless all parties involved in the Appeal agree in writing to an extension of time for the hearing.

225.3.2 All appeals and responses must be submitted in writing, including any evidence the parties intend to offer in support of or in response to the Appeal.

225.3.3 The Appeals Commission shall decide on the location and format for the Appeal (phone conference, in person, e-mail exchanges).
The Appeals Commission members are required to respect the confidentiality of the appeal until the decision is made public and to consult only with the other members of the panel during the deliberations.

The Chairman of the Appeals Commission may request additional evidence from any of the parties involved, providing this does not require disproportionate means.

225.3.4 The Appeals Commission shall allocate costs of the appeal pursuant to 224.15.

225.3.5 Decisions of the Appeals Commission may be announced orally at the conclusion of the deliberations or hearing should one take place. The decision, together with its reasoning, shall be submitted in writing to the FIS, which shall deliver them to the parties involved, their National Associations and all members of the Jury whose decision was appealed. In addition, the written decision shall be available at the FIS Office.

225.4 Further Appeals

225.4.1 Decisions of the Appeals Commission may be appealed to the FIS Court in accordance with Article 52; 52.1 and 52.2 of the Statutes.

225.4.2 Appeals to the FIS Court shall be in writing and submitted to the FIS Secretary-General in accordance with the time limits prescribed in Article 52; 52.1 and 52.2 of the Statutes from the date of the publication of the Appeals Commission decision.

225.4.3 An Appeal to the Appeals Commission or to the FIS Court will not delay the implementation of any penalty decision of the Competition Jury, Appeals Commission or Council.

226 Violation of Sanctions

Where there is a violation of a sanction that has been imposed (according to ICR 223 or the FIS Anti-Doping Rules, the Council may impose such further and other sanctions that it considers appropriate.
In such cases, some or all of the following sanctions may apply:

226.1 Sanctions against individuals involved:

- a written reprimand;

and/or

- a monetary fine not to exceed the sum of CHF 100'000.--

and/or

- competition suspension at the next level of sanction - for example if a three month suspension for a doping offence was imposed, a violation of the suspension will cause a two year suspension; if a two year suspension for a doping offence was imposed, a violation of the suspension will cause a lifetime suspension;

and/or

- withdrawal of accreditation from individuals involved.

226.2 Sanctions against a National Ski Association:

- withdrawal of FIS funding to the National Ski Association;

and/or

- cancellation of future FIS events in the country involved;

and/or

- withdrawal of some or all FIS membership rights, including participation in all FIS calendar competitions, voting rights at the FIS Congress, membership of FIS Committees.

2nd Section

Joint Regulations for Ski Jumping Competitions

400 Organisation

401 The Competition Committee and Officials

401.1 Members:

– the chief of competition
– the competition secretary
– the chief of hill
– the chief distance measurer
– the chief of calculations
– the chief of security
– the chief of technical facilities
– the chief of equipment
– the chief of first aid services.

Additional officials may be appointed to the Competition Committee as specific needs arise.

401.2 The Officials and their Duties

401.2.1 The Chief of Competition
is responsible for the preparation of all technical and administrative aspects of the competition. He directs, controls and monitors the work of all officials. He chairs the Team Captains' Meeting in coordination with the Technical Delegate (TD) / Race Director (RD).
He directs on assignment of the Jury the technical aspects during both official trainings and the competition.

401.2.1.1 The Competition Secretary
is responsible for all administrative and secretarial work associated with the competition. This official is in charge of preparing for other officials all forms, lists, and tables, including start lists, results lists, minutes of the team captains meeting, and informational bulletins on the competition. The competition secretary also accepts any protests arising from the competition and works as secretary of the Jury.

401.2.1.2 The Starter
is responsible to ensure that all participants start from the designated start place in the proper order and within the designated start time.
Whenever a competitor violates the rule for the starting procedure, the starter must immediately report to the Jury.
At OWG, WSC, and WSFC there is an additional start referee. He has to supervise that the starting procedure is carried out correctly and controls any infringements. He has to ensure that no unauthorised persons are present in the start area.
He has authority over the starter and his assistant.

401.2.3 *The Chief of Hill*

is responsible for the preparation of the jumping hill. He coordinates and controls the work of the chief of the inrun and the chief of the landing area. During both training and the competition he remains in continual contact with the chief of the competition and keeps him informed about hill conditions.

401.2.3.1 *The Chief of the Inrun*

is responsible for the preparation of the takeoff and the inrun.
During the competition, the chief of the inrun observes and controls the entire length of the inrun. In the case of a fall or an obstruction on the inrun, the Jury uses information from the chief of the inrun to determine whether to allow the competitor a re-jump.
On jumping hills not equipped with automatic start lights, the chief of the inrun must position an assistant at the takeoff to give the signal that the hill is clear. This assistant receives the signal to open the jump from chief of competition.

401.2.3.2 *The Chief of the Landing Area*

is responsible for preparing the landing slope and the outrun area with manual packing and grooming techniques with suitable skis (alpine skis) or mechanical equipment. This is to provide optimal conditions for the competition.

401.2.4 *The Chief of Forerunners*

has the responsibility, immediately prior to the start of the training, the competition and at all times during the competition to organise and coordinate the experimental test of inrun length. In situations of changing environmental weather conditions (snow) during the competition he must ensure that forerunners keep the inrun track open and clear of snow.
This official must work closely with the chief of hill and chief of competition to determine how many forerunners will be needed and on what occasions they will be used.

The organiser is responsible for the arrangement of eight (8) qualified forejumpers on each day. These jumpers may not be part of the official competition but must be entered by their National Ski Association according to ICR art. 215. All of them must be capable to start from the starting point established by the Jury for the competition round. The Jury may appoint additional forejumpers from non qualified competitors.

401.2.5 *The Chief Distance Measurer*

The responsibilities of this position are as follows:

- the correct placement of the distance markings on both sides of the landing hill (art. 415.1)
- the placement of measurers according to ICR Rules and of the distance recorder (art. 404.2.1 and 404.2.2).

The chief distance measurer must supervise the efforts of distance measurers. He must arrange the measurers in such an order that the least experienced and skilled are situated above the P point of the landing hill. He must constantly oversee the reporting by measurers of the distances jumped and the communication of these distances to calculations personnel and the public announcer.

Before the competition, the chief distance measurer shall instruct distance measurers in the measuring techniques to be used.
It is mandatory for each distance measurer to be present during the training prior to the competition in order to receive the instruction of the chief distance measurer. Non-participation during this training shall bar the measurer from acting in the role as a measurer for the competition.

401.2.6 *The Chief of Calculations*
is responsible for the calculation of the results. Together with his assistants the chief of calculations is responsible for the quick collection of the basic scoring data and making a quick and correct calculation.

401.2.7 *The Chief of Security*
is responsible for ensuring that persons not involved in running the competition are kept at a safe distance from the hill so that they do not interfere with or disturb the work of the officials. Specific responsibilities include the following:

- ensuring that only authorised personnel are allowed access to the Judges tower and coaches platform
- ensuring that an appropriate area for journalists and photographers has been set up and fenced off for control
- ensuring before the competition that entrances, stands, and other facilities for competitors, officials, and spectators are properly marked, fenced off for control, and in good order
- ensuring that only authorised personnel and competitors have access to the inrun and the take off. Team officials and members of media/press are not permitted at the inrun and take off.

Giving information to the jumper on the inrun with the help of technical equipment is prohibited. Information given by the organiser is permissible.

401.2.8 *The Chief of Technical Facilities*
is responsible for the control and orderly functioning of all technical systems and devices used during the competition. This official shall ensure that the following are functioning properly:

- devices to measure and display the jumping distances, the inrun and wind velocities
- spotlight
- all systems of artificial inrun cooling
- internal telephone or radio communication lines
- the electronic-scoreboard display of start numbers, distances jumped, style points, and overall points of each participant.

401.2.9 *The Chief of Equipment*
is responsible for supplying proper equipment to the chief of competition. The chief of equipment must also work closely with the chief of competition before the competition to make sure that the proper equipment and tools will be on hand during the competition.

401.2.10 *The Chief of Medical and Rescue Service*
is responsible for the treatment of first aid for everyone at both the official training and the competition – competitors, spectators, officials, etc. This official is also responsible for establishing emergency procedures for transportation to a medical facility. Specific responsibilities include ensuring that proper medical teams and the necessary medical equipment are present during both official training and the competition. Details of the Medical Support Requirements are given in chapter 1 of the FIS Medical Guide containing Medical Rules and Guidelines.

402 The Jury and Competition Management

402.1 The Jury

402.1.1 *The Jury consists of the following members:*

- the Technical Delegate (TD)
- the Chief of the competition
- the Assistant of the TD.

402.1.2 The Duties of the Jury

The Jury must ensure that the entire competition, including the official training sessions, is organised and carried out in accordance with the Rules of the International Competition Rules (ICR).

The Jury must decide:

402.1.2.1 From which maximum inrun-length the jumpers must start.
The length of the inrun must be determined in such a way, that the jumping hill is used to its full capacity.
For the competition, the Jury is required to meet, once a jump has reached 95 % of the established Hill Size (HS) to consider whether the round of jumps is to continue. The Jury must decide whether the round in progress can be continued with the same inrun speed, or whether it must be cancelled and repeated from a lower starting gate.
If the jumps are too short, the round can be stopped, cancelled, and started over from a higher gate. In the event that the so called Wind/Gate Compensation System is in place, the in-run length can also be changed within a competition round (see art. 422.1).

402.1.2.2 In which sphere of the wind condition (velocity) the jumper is allowed to start.

402.1.2.3 The need to interrupt, postpone or cancel the competition.

402.1.2.4 About the starting order for a competitor who is either delayed arriving at the start due to „force majeure“, or concerning a re-jump for a competitor who has been obstructed.
In cases in which the Jury cannot take an immediate decision the jump or re-jump may be provisionally granted. This decision must be announced to the public.

402.1.2.5 All protests, disqualifications, sanctions and questions that occur during the competition and are not covered or not covered completely by the ICR Rules and Regulations.

402.1.3 Decisions

All decisions by the Jury must be made by open vote and a resolutions-protocol must be drawn up on all decisions which were taken. Each of the members has one vote. All the decisions of the Jury require plain/simple majority.
The members must vote (agreement or rejection, abstention is not possible) with the following exceptions:

– member is prevented from voting due to “force majeure”,

In case of a tie, the respective chairman of the Jury has the decisive vote.

402.2 The Competition Management

402.2.1 At OWG, SWC, WSFC, WCJ and GPJ competitions the Competition Management consists of the following members:

- the Race Director FIS (RD)
- the Technical Delegate (TD)
- the Chief of Competition
- the Assistant of the TD
- the Assistant of the RD
- the Equipment Controller

402.2.2 At COC and FIS Cup competitions the Competition Management consists of the following members:

- the COC/FIS Cup Coordinator
- the Technical Delegate (TD)
- the Chief of competition and
- the Assistant of the TD.

403 FIS Officials for Jury and Competition Management

403.1 The FIS Technical Delegate (TD)

403.1.1 TDs are appointed for all Ski Jumping competitions on the FIS Calendar (nomination art. 405). The TD is responsible for ensuring that the competition is carried out in accordance with ICR Rules and with the appropriate Cup Competition Regulations. At OWG, WSC, WCSF, JWSC, WCJ-, GP- and COCJ-events the TD cannot in general be a member of the host Nation's Ski Association; however, the FIS Council may make exceptions to this rule.
The TD is obliged to uphold the decisions of the Jumping Committee and must possess a valid license at the time of appointment.

403.1.2 *Requirements and Qualifications*

A TD candidate must have an extensive background in support roles for officials. The TD must be able to communicate clearly in the official FIS language of English. The TD candidate's National Ski Association submits the candidate's qualifications to the Sub-Committee for Officials, Rules and Control for review. The qualification period for a new candidate is three years. When starting this qualification period, the candidate should be under 43 years of age. The Jumping Committee will grant exceptions to this rule in well-substantiated cases in which the National Ski Association files a petition for admission on behalf of the candidate.

The guidelines for TD qualifications as ratified by the FIS Council are valid for certification as a TD. Candidates for TD are not entitled to reimbursement for their expenses during the qualification period.

403.1.3 *Examination and License*

After completing all requirements for qualification, the candidate is granted admission to the examination. The guidelines for the FIS TD examination as ratified by the FIS Council are valid for the examination.

After passing the examination, the candidate will receive a license; this license consists of a passbook and a TD badge.

403.1.4 *Further Qualification and Revocation*

To retain a FIS license, a TD must participate every two years in a certification course organised by the FIS.

A TDs license will be revoked if the TD fails to work as an assigned TD for two consecutive years without justified cause. Re-appointment and certification are possible only after the FIS receives a support letter from the National Ski Association's chairman of officials and the head course instructor verifies the TDs successful participation in a FIS TD certification course. The re-appointment has to be confirmed by the Sub-Committee for Officials, Rules and Control.

403.1.5 *The Duties of the Technical Delegate*

403.1.5.1 *Before the Competition*

The inspection points to be covered by the TD include the following:

- the organisation of the event, lodging conditions, meals, transportation, preparation for the media, and working conditions must be inspected.
- the jumping hill(s). The preparation of the hill, the agreement between the hill's actual profile and that in certificates, jumpers' safety, and measuring devices must be reviewed. The control of the measurement of lengths, widths and inclinations as well as the control of the layout, operational elements and installations as defined in the TD report.
- technical and organisational planning for the competition. The TD must assess working conditions for Judges, distance measurers, and calculation personnel; this official must also
- evaluate the communication network (telephone and radio), the coaches stand, the scoreboard display, start lights, start control, first aid services, and spectator control.
- control of all technical devices

– the competition program. Inspection must cover training times; team captains meetings, the competition schedule, doping control, equipment control, and the awards ceremony.
– Control of the passes for the Jumping Judges and the confirmation of their participation.

The TD has the authority to ask the Organising Committee for any support deemed necessary to the fulfilling of these tasks.

403.1.5.2 *During the Competition*

It is the responsibility of the TD to ensure that the competition is carried out in accordance with ICR Rules. The TD must be present throughout the entire competition and must be located in the Judges tower. It is essential that the TD has a direct communication line with the Jury, thereby making possible quick and accurate decisions by the Jury.
Whenever a problem arises that is not completely covered in ICR Rules or arises from a concern of Jury members, the TD must initiate both the discussion and the decision-making processes.

403.1.5.3 *After the Competition*

Immediately after the competition ends, the TD must do the report on all aspects of the event; the report shall consist of the designated report form and any additional comments deemed relevant. This report shall include but is not limited to a discussion of organisational preparation, preparation of the hill(s), an evaluation of the competitive event, a final results list and a complete set of minutes from all meetings and Jury decisions. The report is available online.

403.2 FIS Race Director (RD)

This official is nominated by the FIS for competitions of the highest category (see art. 402.2.1). The FIS Race Director must possess a TD-license for Ski Jumping.

403.2.1 The Duties of the Race Director include:

– Represents the interests of the International Ski Federation.
– Schedules and conducts inspections.
– Supervises that all aspects of the organiser contract are correctly fulfilled.
– Monitors the proper operation of the event according to the regulations and guidelines of FIS and reports to the resp. Technical Committees.
– Responsibilities for the coordination of all persons and parties involved.
– Coordination of decisions concerning postponements and replacements of an event after cancellations.

The RD has the authority to ask the organising committee for any support deemed necessary to the fulfilling of these tasks.

403.3 TD-Assistant

The TD-Assistant must possess a TD-license for Ski Jumping.
Additionally, he is responsible for the following special functions:

– Inspection of the validity of the hill certificate after arrival

- Responsible for the correct and duly preparation of the competition facility (athletes area, chairlift, warm up area, starting area, in-run, take off, landing area as well as out run area)
- Inspection of the security relevant installations (sideboards, fences)
- Connection to trainers
- Completion of the TD report form with any additional comments deemed relevant.

403.4 RD-Assistant

This official is nominated by the FIS for competitions of the highest category (see art. 402.2.1). He must possess a TD-license for Ski Jumping and will be appointed by the RD for specific tasks.
Additionally, he is responsible for the following special tasks:

- Placement of the technical systems for the in-run speed measuring and the measuring of the wind velocity.
- Control and monitoring of the technical systems.
- Coordinates and directs the starting procedure.

403.5 COC-/FIS-Cup Coordinator

This official is nominated by the FIS for COC and FIS-Cup competitions (see art. 402.2.2). The COC-/FIS-Cup Coordinator must possess a TD-license for Ski Jumping.

403.5.1 The Duties of the COC-/FIS-Cup Coordinator include:

- Represents the interests of the International Ski Federation.
- Supervises that all aspects of the organiser contract are correctly fulfilled.
- Monitors the proper operation of the event according to the regulations and guidelines of FIS and reports to the resp. technical Committees.
- Responsibilities for the coordination of all persons and parties involved.
- Coordination concerning postponements and replacements of an event after cancellations.

The COC-/FIS-Cup Coordinator has the authority to ask the organising committee for any support deemed necessary to the fulfilling of these tasks.

403.6 Equipment Controller

This official is nominated by FIS for competitions of the highest category (see art. 402.2.1). The Equipment Controller must possess a TD-license for Ski Jumping.

403.6.1 The Duties of the Equipment Controller are:

- Responsibilities for the correct preparation and maintenance of the necessary equipment control devices.
- Controls the equipment, records of any infringements and makes reports to the Jury.

404 Judges and Referees

404.1 Jumping Judges

404.1.1 Jumping Judges are appointed for all competitions sanctioned on the FIS Calendar (nomination art. 405). At this level of competition, five Jumping Judges must be in attendance. These Judges must hold a current FIS license and one of them can be recognised as a candidate for Jumping Judge.
The Jumping Judge's mandate is based on the instructions and rules set out by the Sub-Committee for Officials, Rules and Controls.

404.1.2 Requirements and Qualifications
Candidates applying for certification as a Jumping Judge must have a minimum of three years of practical experience as a national-level Judge. The candidate's National Ski Association brings the relevant qualifications to the chairman of the Sub-Committee for Officials, Rules and Control. It is the responsibility of the National Ski Association's chairman of officials to indicate in written form that the candidate possesses the understanding of Ski Jumping sport necessary to qualify for a Jumping Judge's license.
The candidate's qualification period shall be a minimum of two years. During this period, it is the responsibility of the National Ski Association to provide the candidate with the necessary training and practical assignments. Candidates should be no older then 43 before the start of their qualification period. In exceptional cases, the National Ski Association may file a petition on behalf of the candidate with the Sub-Committee for Officials, Rules and Control for an exception to this rule.

After having qualified, candidates for Jumping Judge should familiarise themselves with all aspects of Ski Jumping. They must learn the following:
- the optimal aerodynamic flight positions and the sequence of movements from flight to landing and on to the outrun
- the standards for position and movement during flight, during landing, and on the outrun (art. 431)
- the point deductions for faults during flight, during landing, and on the outrun (art. 431.2).

All candidates must possess good communication skills in at least one of the official FIS languages.

Candidates for Jumping Judges are not entitled to be reimbursement for their expenses during the qualification period.

404.1.3 Examination
After all requirements for qualification have been completed, the National Ski Association's Obman informs the chairman of the Sub-Committee for Officials, Rules and Control of the candidate's satisfactory completion of the qualifications. At this time, the national chairman of officials also informs the FIS chairman of the candidate's assignment to an international jumping competition for the taking of the practical examination.
The candidate should be at most 45 years old at the time of the practical examination.

404.1.4 *License*

After passing the practical examination, the candidate will receive a license; this license consists of a Jumping Judges passbook and a FIS Judges badge. All assignments as a Jumping Judge and all participation in FIS courses must be recorded in the passbook.
To confirm the assignments or participation in the Jumping Judges passbook, the TD, TD-Assistant, another jury member or the responsible of the education are the only persons authorised.

404.1.5 *Further Qualification and Revocation*

All licensed Jumping Judges must participate annually in either an international or a national update/certification course.

If either of the following occurs, the Judge may no longer officiate as a Jumping Judge at international competitions:

- The Judge cannot show proof of any judging assignments or activity.
- The Judge fails to participate in a certification course for Judges for a period of two consecutive years.

Reinstatement of the Judge's FIS license is possible after successfully completing an international Judges course and receiving a written recommendation from the national Obman and from the head instructor and by the confirmation of the Sub-Committee for Officials, Rules and Control.
Once Jumping Judges reach the age of 60, they are automatically retired as Jumping Judges. However, they may continue to function as a Jumping Judge for competitions at “Continental Cup”, “FIS Cup” and “International competition”-level until 65 and in their own Ski Associations at national-level competitions.

After reaching the age of 60 a Jumping Judge may apply in writing to the respective National Ski Association for prolongation up to the age of 65 for COC and WC. The Sub-Committee for Officials, Rules and Control in coordination with the National Ski Association hast to decide annually regarding this qualification.

404.1.6 *Duties*

404.1.6.1 The Jumping Judge shall follow the fundamental principle of scoring all jumps objectively as an expert. By appointing individuals as Jumping Judges, the FIS indicates its confidence that these Judges will follow rules of conduct to the best of their ability. Judges are expected to do as follows:

- prepare themselves for competitions with extensive on-hill practice throughout the skiing season
- strive to judge each jumper objectively and in an unprejudiced manner.

Jumping Judges need both constant practice and a multitude of competitive assignments on a variety of jumping hills. When judging at a competition, Judges must

- be present in the Judges compartment during training
- be familiar with all aspects of the jumping hill and be familiar with the place assigned in the Judges tower

– be familiar with the system to be used to record style points
– be in position well before the start of the trial round of competition.

404.1.6.2 The Jumping Judge must judge each jump independently from the other Jumping Judges and other persons according to the regulations of the ICR (art. 430).

He must not use or have on his person any means of communication to other persons. The Jumping Judge must enter their given points deduction personally and without assistance into the data system and/or on the style note card. In the case of all discrepancies the deduction (score) entered by the Judge into the data system is decisive.
Within the entire length of an interval of the respective athlete discrepancies of the entries (scores) can be announced and corrected.

404.2 Distance Measuring Officials

For all Ski Jumping competitions listed in the FIS Calendar of events, the distances jumped shall be reported by distance measurers (art. 432.1 and 432.2).
Each National Ski Association participating in the event may enter one distance measurer as long as the person nominated possesses the required qualifications and performs these duties during all official training periods. Foreign distance measurers are not entitled to be reimbursement for expenses arising from their appointment by the organisers.

404.2.1 Distance Measurers
take their place on one side of the landing hill on the prepared standing positions behind the distance boards according to the measuring area assigned to them by the chief of distance measurer. If foreign distance measurers are appointed, they must be assigned to measuring areas which lie between the landing segment K-point up to Hill Size (w) and must be determined by a draw, which is supervised by the chief distance measurer.

The measuring area of a distance measurer must not exceed the following ranges:

up to 60 % of the Hill Size (HS)	5 meters;
from 60 % to 80 % HS	4 meters and
from 80 % to 100 % HS	3 meters.

Every distance measurer has the clear responsibility to watch only over the measuring area which he was assigned to, and to show the given landing spots in his measuring area immediately and to give those to the distance recorder clearly (according to art. 432.2) regardless of the actions of the people beside him.
At OWG, SWC, WSFC, JWSC and World Cup, Grand Prix, COC and FIS Cup events video distance measuring will be used, so that the distance measurers who are positioned in the landing segment of the video distance measuring will only then go into action if there is a technical failure of the video measuring.
For this reason the measuring distance, which these distance measurers are assigned to, can be up to 10 m long, and the distance measurers have to

stand higher off to the side. In addition, there must be cross-lines marked every 5 m on the landing hill.
At OWG, SWC, WSFC, WC, SGP the measuring can be done without distance measurers as long as the recording of all jumps is secured.

404.2.2 *The Distance Recorder*

The distance recorder shall be located in a suitable location on the landing hill opposite of the distance measurers but offers the distance recorder an advantageous position from which to receive reported distances. The distance recorder is responsible for the accurate recording and reporting of jumping distances indicated by the distance measurers. At the conclusion of the competition, the distance recorder must deliver the original Distance Record Chart to the competition secretary for processing and final review by calculations personnel.

405 The Nomination, Reimbursement, and Insurance of Competition Officials

405.1 Nominations

The FIS shall nominate certain officials for international Ski Jumping competitions. Jumping Judges may not be assigned to events in which a family member is participating (grandparents, parents, children, brother, sister, husband, wife)

405.1.1 Olympic Winter Games (OWG), World Ski Championships (WSC), World Ski Flying Championships (WSFC) and Junior World Ski Championships (JWSC)

For OWG, WSC, and WSFC:

- the TD
- the RD
- the TD-Assistant
- the RD-Assistant
- the Equipment Control
- the Chief Distance Measurer
- six Jumping Judges.

Five at a time, the nominated Jumping Judges will officiate at the respective Ski Jumping competitions at OWG and SWC, or at the respective competition days at WSFC, taking turns based on a draw decision.

The 6th Jumping Judge of the respective competition or competition day will act as start or fall referee (Jury decision).

For JWSC:

- TD
- TD-Assistant
- the Chief Distance Measurer
- five Jumping Judges.

The nomination of all named competition officials is carried out by the FIS Council.
The Jumping Judges nominated must belong to different Ski Associations. One of the Jumping Judges should be a member of the Ski Association of the organising country.

405.1.2 *World Cup- and Grand Prix-Ski Jumping Competitions (WCJ, GPJ)*

- TD
- RD
- TD-Assistant
- RD-Assistant,
- four foreign Jumping Judges and
- one Jumping Judge of the host country.

The Sub-Committee for Officials, Rules and Control nominates the TD and TD-Assistant for the event by name and determines which four National Ski Associations may nominate one of their own qualified Jumping Judges to officiate at the event.
The National Ski Association of the host country shall nominate the remaining Jumping Judge from their own list of qualified Jumping Judges.

405.1.3 *Continental Cup Ski Jumping Competitions (COCJ)*

- the TD
- the COC Coordinator
- the TD Assistant
- one foreign Jumping Judge.

The Sub-Committee for Officials, Rules and Control nominates the TD and TD-assistant and determines which National Ski Association may nominate one of their own qualified Jumping Judges to officiate at the event.
The National Ski Association of the host country shall nominate the four remaining Jumping Judges.

405.1.4 *FIS Cup Ski Jumping (FCJ) and International Ski Jumping Competitions (FIS)*

FIS nominates the FIS-Cup Coordinator. The National Ski Association of the host country shall nominate the TD, the TD Assistant and the five Jumping Judges. The TD and the TD Assistant and the five Judges must possess a valid FIS license at the time of appointment.

405.2 The Nomination of Substitutes

Whenever a competition official nominated by the FIS is unable to attend the competition and fulfil an assignment („force majeure“), the official must be replaced. For OWG, WSC, WSFC, JWSC, WCJ, GPJ and COCJ events, the substitute nomination must be confirmed by the FIS Office.

405.3 The Reimbursement of Expenses

The competition Organising Committee is responsible for the cost of travel and accommodation to the following amounts:

405.3.1 *Travel Expenses*

– first class train fare,
– air fare for longer distances (economy class)
– and/or CHF 0.70 per km for travel by car (car expenses from and to the airport)
– parking costs

Prior to his travel the nominated competition official must confer with the organiser regarding the travel arrangements (train, plane or car).

405.3.2 *Daily Allowance*

CHF 100.– per day of travel to and from the event. The TD and TD Assistant get in addition during OWG, WSC, WSFC, WCJ and GPJ, COC, JWSC and, if necessary, for FCJ (see 405.4.5) competitions CHF 100.– per day for the duration of the event.

405.3.3 *Accommodation*

Free room and board in an adequate hotel at the event.
The stay at the event shall be coordinated with the Organising Committee, including both the days of official training and the days of the competition.

405.3.4 Costs for visa

The costs for obtaining visas have to be paid by the organiser. The reimbursement of costs includes travel costs to the embassy respectively consulate according the ICR art. 405.3.1 travel expenses and the visa costs on receipt.

405.4 The reimbursement of expenses mentioned above will apply to the competitions and officials listed below:

405.4.1 *OWG, WSC, and WSFC*

– the TD
– the TD-Assistant
– the RD-Assistant
– the Chief Distance Measurer
– six Jumping Judges.

405.4.2 *JWSC*

– the TD and
– the TD-Assistant.

At JWSC, the reimbursement according to the regulations for JWSC shall apply to the following:

– the Chief Distance Measurer
– the five Jumping Judges.

405.4.3 *WCJ- and GPJ-Competitions*

– the TD
– the TD-Assistant
– the RD-Assistant
– the four foreign Jumping Judges.

405.4.4 *COCJ Competitions*

– the TD
– the TD-Assistant and
– one foreign Jumping Judge.

405.4.5 *FIS Cup (FCS) and International Ski Jumping Competitions (FIS)*

– the FIS-Cup Coordinator.
– the nominated foreign TD, TD Assistant and Jumping Judges
These officials have to be paid according to art. 405.3.2

405.4.6 *National nominations for FIS Officials at FIS Cup and International Competitions*

For the nominated TD, TD Assistant and the five Jumping Judges the National Ski Association resp. the Organiser is responsible for providing at least traveling expenses, full board and accommodation during the event according to the national rules.
TD and TD-Assistant get (except the expenses) at least one daily allowance as reimbursement.

406 The Age Classification of Competitors

406.1 Two age classifications have been established for FIS Ski Jumping competitions:

– Juniors up to 20 years of age on 1st January of the current calendar year.
– Seniors: all competitors over the age limit for Juniors.

In OWG, WSC and World Cup competitions, all competitors shall start in one category. For JWSC competitions, the age regulations are as follows:

Juniors can be no older than 20 during the competition year. The birth years for juniors from 2012 on:

– 2014, competitors born in 1994 and younger
– 2015, competitors born in 1995 and younger
– 2016, competitors born in 1996 and younger
– 2017, competitors born in 1997 and younger
– 2018, competitors born in 1998 and younger

406.2 In OWG, WSC, and WSFC competition, all competitors shall start in one class. For JWSC competition, the age regulations are as in art. 406.1.

406.3 For all other international Ski Jumping competitions, separate age groups may be established. The entry form must advise participants what the various age groups will be.

406.4 Junior competitors may start in the Senior classification provided their National Ski Association has entered their name in that category. However, Juniors wishing to start in this category must have the skills to compete in that class.

410 The Jumping Hill

411 Standards for the Construction of Jumping Hills

411.1 Classification of the Jumping Hills according to sizes.

The class of the hill will be determined by the distance of the L-point (HS): Hills are classified by sizes as follows:

Description	Width HS	Respective Width w
Small hills	to 49 m	to 44 m
Medium hills	50 m to 84 m	45 m to 74 m
Normal hills	85 m to 109 m	75 m to 99 m
Large hills	110 m and larger	100 m and larger
Flying hills	185 m and larger	170 m and larger

Large hills for which the height difference between the lowest point in the outrun and the edge of the takeoff exceeds 88 m will not be homologated by the FIS.

Whenever new twin-hill construction is to take place, the difference between the distances at HS on the normal and large hill should be a minimum of 25 meters.

411.2 The Geometrical Elements for the Jumping Hill (Fig. 1)

Inrun

A highest start place
B lowest start place
E_1 the beginning of the radius curve
E_2 the end of the curve, the beginning of the takeoff
T the edge of the takeoff
e_1 the length of the inrun from the highest start place to the edge of the takeoff table
e_2 the length of the inrunfromthe lowest start place to the edge of the takeoff table
e_s the length of the starting place area
t the length of the takeoff
γ the gradient of the straight section of the inrun
α the gradient of the takeoff
r_1 the radius of the curve of the inrun at point E_2

Profile of Landing Area

T the edge of the takeoff of the hill (=coordinate origin)
s the height of the takeoff
P the beginning of the landing area
K construction point
L the end of the landing area
U the start of the outrun area, lowest point of the profile
HS the measured distance (Hill Size) from the edge to the takeoff to the end of the landing area L
w distance between the edge of the takeoff and the construction point K, measured according to ICR art. 415.1
h the height difference from the edge of the takeoff to the K point
n the horizontal distance from the edge of the takeoff to the K point
z_U the height difference from the edge of the takeoff to the lowest point U
l_1 the length of the curve P-K
l_2 the length of the curve K-L
l the length of the curve of the landing area P-L
a the length of the outrun
β_o the tangent angle of the landing hill knoll at the base of the takeoff
β_P the tangent angle at P point
β the tangent angle at K point
β_L the tangent angle at L
r_L the landing hill radius P-L
r_{2L} the radius curve at L
r_2 the radius curve at U
b_1 the clear width of the inrun
b_2 width at the base of the takeoff
b_k the prepared width at the K point
b_u the prepared width at the end of the r_2 radius and the start of the outrun

Fig. 1

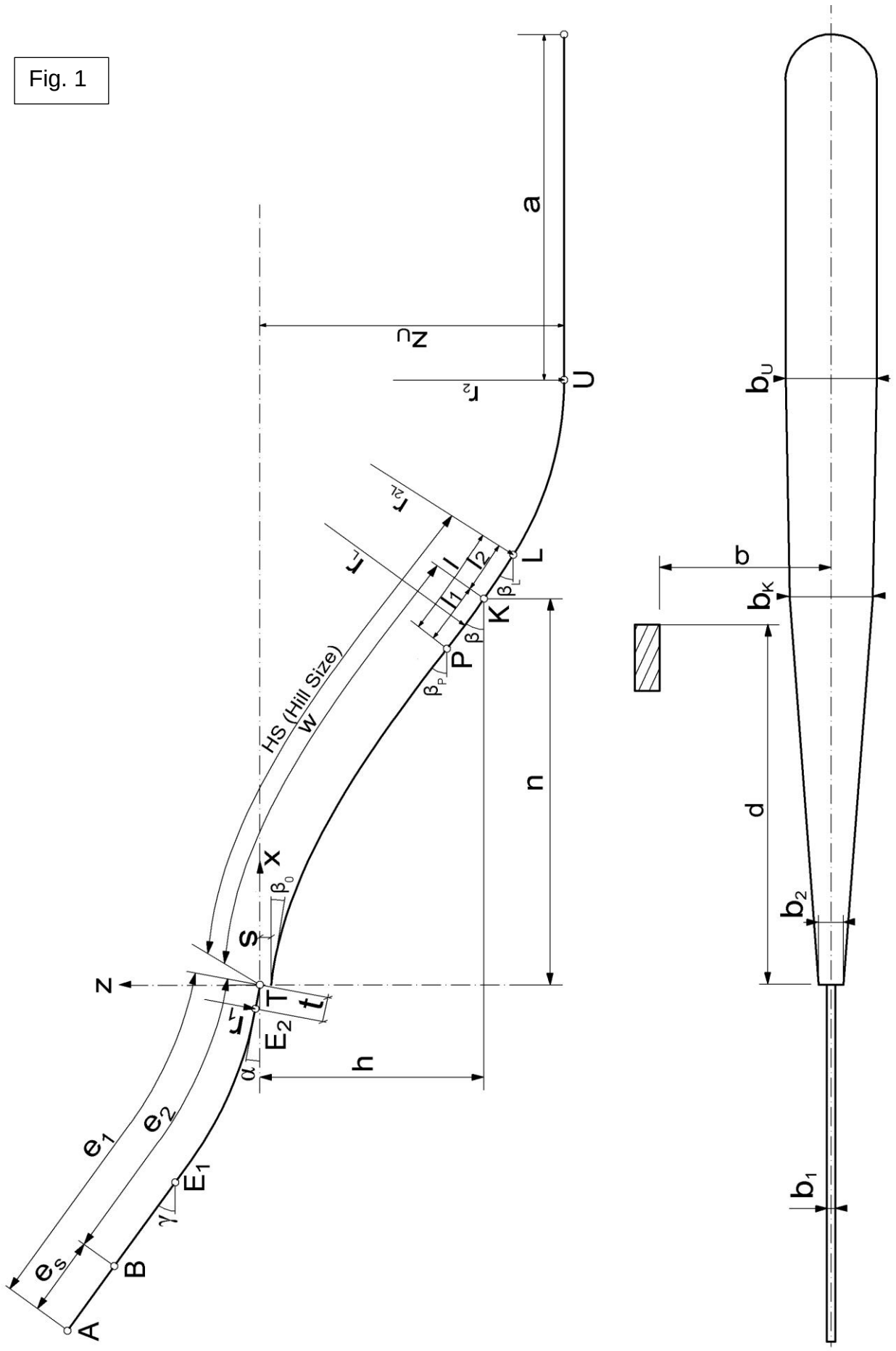
A
B
E1
E2
T
U
L
K
P
z
x
s
t
a
n
h
d
b
HS (Hill Size)
w
e1
e2
es
zU
rL
r2L
r2
l
l1
l2
bU
bK
b2
b1

411.3 **Description of the Side Profile**

411.3.1 *The Inrun*

The inrun is composed of a straight section with γ gradient, followed by a curve with a bend rising from 0 to the end of the curve with the radius r_1 at the beginning of the takeoff and a straight takeoff table with length t and gradient α. Starting places must be set above area e_s with the same distance between them.

411.3.2 *Landing Hill Profile*

The landing hill profile shall consist of the following components: starting from the bottom of the takeoff, the entire landing hill, the transition curves and the outrun area.

411.3.2.1 The knoll area of the landing hill begins at the bottom of the takeoff with a height of s, below the edge of the takeoff, with inclination β_o and ends at the P-point with inclination β_p. The preparation of the landing hill profile under the jumper's take off (knoll) must provide good landing conditions for short jumps and an optimum flight curve for the long jumps.

411.3.2.2 The landing area from P to L is of a circular shape which is determined by the radius r_L. This radius starts at the P point with the tangent angle β_p. At the K point and at L the tangent angles are β and β_L.

411.3.2.3 The curve from landing hill to outrun can be either klothoid or circular.

411.3.2.4 The outrun shall provide enough area for slowing and stopping. It must have a horizontal cross-section contour. The length profile can have an inclination or bend(s).

411.4 The following jumping hill requirements are essential and must be complied with when preparing a hill for competition.

The relationship value between the written speed velocities v_o in m/s (= km/h: 3.6) and lengths in m.

t	=	0.25 v_o	(guiding value)
s	=	0.025 w, at least 0.70 m	(guiding value)

The clear width between the guard rails at the inrun is at least:

Inrun

b_1	=	1.5 m	for w < 30 m
b_1	=	1.0 m + w/60	for 30 m ≤w ≤ 74 m
b_1	=	1.5 m + w/100	for 85 m ≤ w ≤99 m
b_1	=	2.50 m	for w >100 m

to maximum of 25 cm more than these values.

Minimum width of the prepared areas of the Landing area and Outrun:

b_2	=	0.06 w, with a minimum of 3 m
b_K	=	0.20 w, with a minimum of 6 m
b_A	=	0.22 w, with a minimum of 6.5 m.

411.5 Construction Requirements for the Jumping Hill that Serve the Elements of Competition and Safety

411.5.1 The Inrun

The inrun for the jumping hill is to be designed to provide the necessary speed v_o at which a maximum jumping distance for the hill can be reached. The layout of the starting gates shall be equal in their distance apart and with a maximum height difference between each starting place not exceeding 0.40 m. In addition, the starting places shall be numbered so that the lowest starting place is designated as start gate number 1.

The prepared snow surface of the inrun must equal the designed snow depth of the profile boards. To the outside of the profile boards, a guard rail of minimum 0.5 m in height is to be constructed. The minimal placement of the guardrails shall be from the start till 1m from the edge of takeoff. The distance between the guardrails and the prepared b_1 width should not exceed an additional 25 cm in overall width.

It is essential that the inrun area within the guardrails is free and clear of all obstructions that could endanger a fallen jumper. At the upper most placement, the upper edge of the guardrail shall be tapered and rounded downwards to ensure additional safety at the beginning of the guardrail.

411.5.2 The Landing Area

From the bottom of the take off, the entire designed width of the landing slope must be prepared with snow. No obstacles are allowed in the prepared area and movable devices must be removed when the hill is in use.

The placement of guardrails on both sides of the landing hill is required for the safety of a fallen jumper or stopping of a runaway ski. The guardrail shall be of a height of minimum 70 cm above the prepared snow profile of the landing hill. The placement of the guardrails on the landing hill shall be from 0.1 w to the end of the transition curve. From the end of the transition curve to the exit gate and around the entire outrun area the height of the guardrail shall be 1 meter above the prepared snow profile. The snow profile height as well as the distance markers (paddles) should be marked on the guardrails. In addition, the guardrails must be parallel to the landing hill profile.

It is essential that the landing hill area within the guardrails is free and clear of all obstructions that could endanger a fallen jumper.

The upper edges of all guard rails must be rounded. The guard rails must be set up in such a way that a stray ski of a fallen Jumper cannot go through.

Guardrails constructed in concrete have to be padded on the inside of the landing area.

411.5.3 The Judges Tower

The five judging compartments shall be separated by solid partitions and have a minimum size of 1.0 m width and 1.2 m depth. It is recommended that the compartments shall ascend upward towards the takeoff and according to the flight trajectory path of the jumper. The height difference between the window sill and compartment floor should be 1.0 m. The compartment walls shall be constructed in a way that prevents a Judge from viewing the given score of the other Judges. The compartment for the chief of competition as well as other competition officials must be constructed in such a way that it eliminates mutual distractions and interference with the Judges abilities to execute their duties.

When two jumps share a common outrun it is not necessary to have two Judges towers when the height difference of the K point of the two hills does not exceed 3 m. The Judges tower must be positioned on the side of the smaller of the two jumping hills. The placement of the tower and judging compartments shall be calculated on the horizontal distance from takeoff and the height norms for the larger hill.

411.5.4 *The Coaches Stand*

For jumping hill facilities, where international competitions are to be organised, coaches must have two suitable stands (for 20 persons each). One stand should be in the area near the edge of the takeoff and the second should have an unobstructed view of the portion of the jumpers flight and the landing.

For OWG, WSC and WCS events, coaches' stands for 40 coaches must be available.

411.5.5 For OWG and WSC events, a mechanical lift for the jumpers is required.

411.5.6 For OWG, WSC, WSFC, JWSC and WCJ competitions, a warming area large enough to accommodate 20 jumpers is required near the inrun.

412 Jumping Hills with Plastic Covering

The Sub-Committee for Jumping Hills sets forth the restrictive norms for constructing a hill with plastic covering, especially for required areas for covering and basic inrun, landing area and outrun constructions. These norms are based on the latest technology and they are available from the chairman of the Sub-Committee for Jumping Hills. He also supplies projects for planning and application forms for homologation of jumping hills with plastic covering.

413 Ski Flying Hills

Particular rules apply to Ski Flying hills. The new building or reconstruction of any current Ski Flying hill may be started only after plans have been approved by the FIS. The following restrictions and requirements must also be met:

- h:n must be at least 0.60.
- The maximum value of V_O is 30 m/s.
- The height difference between the edge of the takeoff platform and the end of landing area (= U-point; = end of the radius r_2) shall be $\leq$ 135 m beginning from U there may be added a radius or transition curve with maximum inclination of tangent in U of 5°.
- The width of the landing slope at K (b_k) must be $b_k \geq 0{,}18$ w
- The width at the end of the r_2 radius and the start of the outrun at U-point b_u must be $\geq 0{,}20$ w

In addition on the edge of the take-off platform, on both sides outside of the landing area guardrails, the exact snow profile height of the K-point, the HS distance and the U-point, have to be marked. This marking has to be fixed with concrete material. These marks have to correspond and reflect the given marks on the hill certificate.

414 The Approval of Jumping Hills

Jumping competitions listed in the FIS Calendar may be carried out only on jumping hills with current FIS approval and an official hill certificate.
The Sub-Committee for Jumping Hills provides certificates for normal, large, and Ski Flying hills.
Small and medium jumping hills must be homologated by National Ski Associations if no international competitions are to be arranged. Standards of National Ski Associations for small and medium size hills can deviate from FIS standards.
The new standards are valid for jumping hills that will be built or reconstructed after 1st January 2009. Certificates for jumping hills awarded by the FIS before 1st January 2009 on the basis of the pre-existing construction standards are still valid.

414.1 New or Reconstructed Jumping Hills

414.1.1 Before the start of hill construction, the owners of the jump hill must submit their plans to the hosting National Ski Association. The plans are then submitted for approval to the chairman of the Sub-Committee of Jumping Hills Hills as well as to the Jumping Committee for confirmation of logistical and organisational aspects. This process shall be done for both new and reconstructed jumping hills. It is a submission requirement to submit 3 copies of the plans, 1:500 scale, including both profile and aerial view of the proposed jumping hill.
In addition to the construction plans, the submitted plan must include a certified meteorological survey by a state certified agency, institute or business. The survey shall provide data on both the snow and the wind conditions of the proposed site. The report information shall be taken at the following site placement.
Accurate wind data shall be measured and recorded at the site plan location between the takeoff of the jump and the landing hill area. The time period to be recorded is from the beginning of December to the end of March. Wind data to be measured shall be both wind direction and wind velocity. The wind velocity shall be measured in m/s.
In general, site selection, planning, and jump complex design should maintain, respect, and comply with both conservation and environmental ideals.

414.1.2 The certificate for Jumping Hills which are intended to be used for international competitions can only be granted if all requirements and measures demanded by the Jumping Committee, given under Art. 414.1.4, are kept.

414.1.3 The chairman of the Sub-Committee for Jumping Hills is authorised to grant preliminary construction permission if FIS standards for jumping hills (art. 411) are completely met and the meteorological report is complete and positive. The chairman will then inform the other members of the Sub-Committee for Jumping Hills of these actions and add the application to the agenda for discussion and final approval at the Sub-Committee's next meeting.

414.1.4 Whenever applications do not meet FIS standards for the construction of jumping hills (art. 411), the Sub-Committee for Jumping Hills must decide whether to grant permission for the construction of the hill during one of its upcoming meetings.

The Sub-Committee for Jumping Hills may grant permission for deviations from FIS standards for the construction of jumping hills if convincing reasons for the deviation are firmly supported and jumpers' safety can be guaranteed through the trouble-free sport-technical performance of the jumps.

414.2 The Homologation of Jumping Hills

414.2.1 After completing construction, renovation, or correction to a jumping hill, the National Ski Association is responsible for applying for the homologation of that jumping hill to the Chairman of the Sub-Committee for Jumping Hills. The application must include three copies of the profile and vertical views to the scale of 1:500. The correctness of the plans must be verified by an authorised professional survey agency.

414.2.2 For all jumping hills with plastic mats, meant to host international competitions, a second profile certificate is required. The special plastic hill certificate must be displayed next to the original hill certificate. The hill owner must apply for an approval for the plastic covering. The chairman of the Sub-Committee for Jumping Hills appoints a member of his Sub-Committee to inspect the facility. If the facility conforms to the Ski Jumping hill rules and special rules (art. 412), the chairman of the Sub-Committee will award the certificate.

414.2.3 After the plans have been reviewed, the Chairman of the Sub-Committee for Jumping Hills shall personally work out the hill certificate for hill profiles that are in agreement with FIS construction standards.

In the case of profiles with deviations from FIS standards, the chairman must decide

- whether to grant conditional permission that enforces the necessary changes through a process of review, control, and responsibility by the proposed hill's National Ski Association
- whether further review and inspection by a certified hill inspector is necessary
- whether an exceptional permission should be reviewed (art. 414.1.3).

414.2.4 The Sub-Committee for Jumping Hills may decide during one of its regular meeting on the homologations of jumping hills after renovations or corrections to profiles have occurred. The decisions of the Committee will be based on the verified application, profile sketches, and profile measurements submitted to the chairman.

414.2.5 Hill certificates are valid for five years. An application for additional extension is needed after five years. When no changes or renovations have occurred in the hill profile, the new certificate will show the number of the previous hill certificate with the addition of the first, second, etc., extension. When profiles have been corrected and renovations have occurred, the new certificate will show the number of the previous hill certificate, and first, second, etc., corrections will be marked.
For renewal of the plastic covering certificate, a report is required from the inspector nominated by the chairman of the Sub-Committee for Jumping Hills. A renewal of the certificate can be given when experience from previous years shows that safety and security of the jumpers conforms to the rules.

The Sub-Committee for Jumping Hills will annually publish a list of all FIS-homologated jumping hills.

414.3 Inspection Reports and the Distribution of Documents

Following a proposal by its chairman, the Sub-Committee for Jumping Hills will commission a hill inspector to check jumping hills scheduled for construction, renovation, and corrections to the profile (art. 414.2.2).
These inspection reports shall be filed in one of the official FIS languages and in written form. Immediately after each inspection, two copies of the report must be sent to the chairman of the Sub-Committee for Jumping Hills.
The chairman of the Sub-Committee for Jumping Hills shall ensure that the certified hill profiles (profile and vertical view sketches to the scale of 1:500) are distributed to the following:

- the owners of the jumping hill
- the National Ski Association
- the Sub-Committee file for hill construction.

414.4 Charges and Compensation

For the verification, approval of hill profiles and homologation of jumping hills and jumping hills with plastic mats will be charged for as follows:

- Verification of hill profile(s) for new- and re-buildings before start of construction: CHF 100.–
- approval of hill profile(s) after construction or renovation including certificate CHF 200.–.
- the issuing of hill certificates for initial applications, extensions, or corrections to profiles CHF 100.–.

At the time of application, equivalent amounts must be transferred to the FIS bank account.
All other expenses incurred by the preparation of new plans or costs for hill inspectors must be covered by the hill owner. Allowances for hill inspectors equal those for TD (art. 405.4).

415 Measuring Devices

415.1 Jumping Distances

Distance markings shall be put on both sides of the landing from the distance of 0.5 w down to 5 m below the point L (HS). Specific rules for Ski Flying hills are determined by the respective jury To correctly put the distance markings, take a measuring tape, and measure from the two extreme sides of the takeoff edge down the landing slope to the point that is 50% of the K point (rounded up to a full m). At this measured point, put the appropriate distance marking on both left and right sides of the landing slope. Measure along the slope in 1 m intervals to mark the location of the other distance markings.
For the measuring of the distances with a technical system (technical distance measuring), the approval of the Jumping Committee is required for its operational validity.

415.2 Inrun Speed

The devices for the measurement of inrun velocity v_o shall be placed as follows:

- The measured distance is 8 m.
- The second photocell beam must be located 10 m before the edge of the takeoff.
- The photocell beam must be 0.2 m above the snow profile.

For jumping hills listed on the FIS competition calendar HS 85 m and larger, inrun velocities must be measured during all training periods and throughout competition.

415.3 Wind Velocity and Direction

The wind measuring instruments must be placed alongside the landing slope at the height of the optimal flight trajectory. The measurement data for these devices must be available to competition officials in the judges' tower and shown in the most consolidated, readable form possible. Measuring instruments must be placed in three locations on normal, large and Ski Flying hills (at the edge of the takeoff as well as at approximately 50% and approximately 100% of the distance to the K-Point). In addition, at least 8 wind flags or wind socks must be placed along each side of the landing hill at the height of the flight trajectory.

If the wind/gate application is used there are special rules relating to the fixation of wind measuring devices

415.4 Start Permission and Start Time Control

415.4.1 Three phase mode

Start permission and starting time control at OWG, WSC, WSFC, JWSC as well as WCJ-, GPJ- and COCJ-events will be determined by means of a three-coloured (red-Yellow-green) stoplight and a digital clock which are connected and running automatically depending on the adjustable starting rhythm program.

During the red phase (start preparation) the clock runs backward from the adjusted time to zero seconds. The red phase is for the direction of the competition and can be stopped whenever needed. During the consecutive yellow phase the clock runs forward. The competitor is allowed to take the position on the starting bar with the begin of the yellow phase. According to the external conditions the Jury decide about the minimal duration of the yellow phase (usually between 10 and 15 seconds). The duration of the yellow phase can be between 10 and 45 seconds. If the conditions do not allow to start the competitor, the yellow phase switches to red automatically. In this case the competitor must leave the starting bar and prepare for the new starting procedure. The yellow phase switches to the green phase after 10 seconds at the earliest.
With the switching to green light, the starting time begins and will be finished after 10 seconds. Within these 10 seconds the competitor must start and leave the starting bar. The light automatically switches back to red and the starting procedure for the next jumper begins.

The times for yellow and red phase must be clearly visible to the athletes on the separate display on the starting semaphore.

415.4.2 *Two phase mode*

The start permission and the start time control for other FIS events must be done with an automatically controlled light signal (traffic light). The light shall be a steady green for 5 seconds, a flashing green for a minimum of 5 seconds up to a maximum of 10 seconds.
After the entire start time period of a minimum of 10 seconds up to a maximum of 15 seconds, a red light thereafter. The established start time period must be clearly visible to the athletes. The countdown of starting time may also be shown by an automatically directed clock.
The chief of competition, an assigned assistant or a Jury member is responsible for controlling the start-time device.

To ensure a correct starting procedure, further technical measures may be used (e.g. order to take the start position through visual or an audible signal), which have special regulations established by the Jumping Committee. This modus can also be used at COCJ-events.

415.5 Lengths, Angles, and Temperatures

The following measuring devices and instruments must be available on site for the TD-Assistant at all times:

- a 50 m measuring tape
- a hydrostatic balance (digital level)
- a balance bar
- a goniom
- a thermometer
- a metric tape measure (minimum 3 m).

These measuring devices will allow the TD to review the actual and current snow profile, snow temperature, and air temperature.

416 Information for Spectators and Facilities for Media Representatives

416.1 Information for Spectators

In addition to receiving information via the loudspeaker system, competitors and spectators should be informed by scoreboards. The scoreboard shall display the competitor's start number, the distance jumped, the style score given by each Judge, the total point score, and current place in the competition.
The scores of the five Judges must be published at the same time.

416.2 Stands for Media Representatives

Optimal working conditions and places shall be provided for representatives from television, radio, newspapers, periodicals, and photography agencies. These conditions shall include continuous information (start lists, current positions and changes of ranking), access to optimal viewing positions, and an assigned area equipped with trouble-free technical devices to facilitate the performance of their duties.

The use of flashbulbs or other lighting devices is prohibited during the jumping competition, for these devices can interrupt and disturb jumpers and their movements.

417 Snow Preparation

Before the start of training and through the entire competition period, the hill - from the start point at the top of the inrun to the end of the outrun - must be prepared in exact accordance with requirements.

417.1 Requirements for the Inrun and Takeoff

The preparation of the snow must be such that it is completely level and at the exact height of the profile boards. This profile should allow a snow depth of minimally 20 cm. The necessary snow density is achieved through packing.
The tracks must be prepared with the help of technical equipment (a track cutter, track plane or inserted profile boards or something similar) according to the following measurements:

- Distance between both centre of tracks for Jumping hills with w over 75 m: 30 – 33 cm
- Width of track: 13.0 – 13.5 cm
- Depth of track: at least 2 cm for normal hills and at least 3 cm for large and flying hills.

The following regulations are valid for OWG, WSC, SFWC, JWSC and WCS events:

- In winter, the in-run tracks must be prepared with artificial snow, ice or in exceptional cases artificial material (i.e. china).
- The in-run tracks prepared with artificial snow or ice have to be supported by a cooling system. The tracks have to be made by track cutters.
- It has to be assured that surface water caused by rain or warm weather can be drained from the track.

The preparation of the inrun and takeoff must provide all competitors with the same conditions throughout each competition round. If it is necessary to change or prepare the inrun during the competition because of snowfall, falls, or long holds, there must be a sufficient number of trial jumps before the competition can continue. In the case of poor and hazardous conditions, the Jury will base its decision on the performance of the forerunners and the effects of the weather on them.

If the length or inclination of the takeoff is changed during one official round of competition, the round must be cancelled and restarted.
It is the Jury's responsibility to decide at the conclusion of a day of jumping whether the inrun track shall be left in or taken out and the inrun prepared anew.

417.2 Requirements for the Landing Slope and Outrun

The snow must be prepared so that it possesses the necessary density and firmness. The snow depth must be minimal 30cm (35cm for the hills with plastic covering).

For sites hosting OWG, WSC, WSFC, JWSC and WC competitions, it is mandatory that the preparation, grooming and packing of snow can be accomplished through the use of an appropriate on-site snow grooming machine. Chemicals may be used to ensure that the necessary firmness can be achieved. The prepared snow surface shall be completely level and concur with the planned (designed) snow profile. This requirement is extremely important for the area from the first distance paddle to U (end of transition curve).

417.3 The Marking of the Landing Hill

The Hill Size (HS) has to be marked on the landing hill by a crossline of spruce twigs or equivalent. This crossline should be marked with red ink colour at each side of the landing slope for a distance of appr. 5 meters. Furthermore, on both sides of the landing slope it is recommended that banners with different colours shall be laid down as follows:

- between the construction point (K) and the Hill Size (HS) a red banner on each side;
- from the K-point towards the P-point a blue banner on each side in an equivalent length of the distance between K and HS, as well as
- from the fall line towards the HS a green banner on each side in an equivalent length of the distance between K and HS.

For the orientation of the measurers, Jumping Judges and spectators regarding distances reached and for calibrating the video-distance measuring, crosslines also have to be placed on the landing slope from 10 m before P-point to the Hill Size (HS) for the Jumping lengths at intervals of five m (e.g. 60 m, 65 m, 70 m, 75 m ...). If needed, the Jury is entitled to add additional markings.

417.4 The Fall Line

It is the responsibility of the Jury to define the placement of the fall line on the outrun. After this decision has been reached, a crossline shall be marked with either a painted line or spruce twigs. As a rule, the fall line shall be located at the lowest point of the r_2.

420 The Administration of the Competition

421 Entries, Draws, and the Admission of Reserves

421.1 Homogeneous rules apply to the entry of athletes by name for FIS ski competitions (art. 215).

421.2 The draw for the starting order shall take place according to the regulations for the accomplishment of competitions (championships on normal or large hills, art. 451; individual competitions on normal or large hills, art. 452; team competitions, art. 453; and Ski Flying competitions, art. 454).

421.3 At Ski Jumping competitions where the participating nations (clubs) are allowed to enter only a limited number of competitors, a reserve may be substituted for a nonstarting competitor.
The Jury is responsible for determining the eligibility and admission of the reserve to be entered.

422 The Competition

422.1 The Jury shall decide the length of in-run (starting place) to be used. If the so called Wind/Gate Compensation System is in place the Jury may change the length of the in-run even during a competition round in order to approach the principles of fairness and safety. The Wind and Gate Compensation Factor will be included in the total score.
A Trainer/Coach is entitled to reduce the length of in-run for his respective athlete. This has to be announced within the red phase of the starting procedure of the athlete concerned. In such a case, the gate compensation factor is only calculated, if the athlete jumps at least 95 % of the HS distance.

422.2 The jumper is not allowed to use ski poles or any other kind of assistance. Nor is the jumper allowed to obtain outside assistance. It is mandatory for the competitor to wear his start number during all rounds (training, qualification and competition).Competitors who violate this ruling will be disqualified.

422.3 When the hill is clear and the officials are ready, the chief of competition or an authorised and instructed assistant from the Jury shall give the start signal from the Judges tower for each competitor. No more than one signal should be used to initiate the exact time of the start control.

422.4 The start signal shall be determined by a green light displayed on the traffic light. If such a starting device is not available, the jumper can be signalled that the hill is clear by the waving of a flag by a control official located on the takeoff platform.

422.5 The jumper must have completely finished the jump before the next starting signal may be given.

422.6 It is the responsibility of the chief of competition to coordinate communication among the chief of hill and this official's various assistants at the takeoff, on the outrun, and at the wind-measuring devices that the hill is clear, that all officials are ready, and that weather (wind) conditions are fair.

422.7 The starter shall report to the chief of competition the number of the upcoming jumper and the competitor's readiness to start.

422.8 It is the competitor's responsibility to be ready at the start when the starting number is called. The Jumper has according to the respective mode of the start time installation (10 seconds in case of three phase mode and 10 – 15 seconds in case of two phase mode) to leave the start after the start signal has been given. If the jumper has not left the start gate by the end of the start time, the hill will automatically be closed (see art. 415.4).

422.9 During the starting procedure the jumper must have the opportunity to clearly observe the automatic countdown display (e.g. a programmable digital clock) (art. 415.4).

422.10 The Jumper has to start within the start time. If the start signal is interrupted during the competitor's starting period for any reason, for example unstable weather conditions, the starting process will begin again.

422.11 The jumper must not start before the official starting signal or intentionally delay readiness to receive signals from a third person. Feigning problems with skis, bindings, equipment, or clothing is inexcusable. Both types of actions will as a rule cause disqualification.

422.12 A competitor hindered by «force majeure» who arrives late at the start may appeal to the Jury. After considering all the facts reported, the Jury may allow the competitor to participate in the remaining part of the competition out of starting order.

422.13 If possible, style points shall be displayed after each competitor's jump (open scoring). An acoustic announcement concerning style points awarded is not permitted.

423 The Repetition of a Jump

A competitor hindered or interfered with during the jump by an error on the part of an official, an animal, spectators or any other «force majeure» may appeal to the Jury. After considering the facts reported, the Jury shall either allow or reject a repeat of the jump. In case of one of the above mentioned reasons, the Jury is entitled to allow repetition of the jump from their own point of view.

424 Training on the Jumping Hill before the Competition

424.1 The training on the competition jumping hill before the competition (official training) is in the schedule assigned to the organisation and under the responsibility of the Jury.
Any additional training under self responsibility and direction of the trainer (free training) during the scheduled organisation days is not permissible.

424.2 At the official training for the competition only the registered competitors as well as the additional fore jumpers specified by the Competition Committee can participate.
At the OWG, WSC, WSFC JWSC and Cup competitions the right to participate at the official training is based on the actual rules and regulations.

424.3 Each official training sessions is carried out according to a starting order determined by the Jury and each competitor shall wear a start number. For OWG, WSC, WSFC, JWSC and Cup competitions special regulations will be applied.

424.4 For FIS International competitions, the jumping hill must be available for training a minimum of one day. For the OWG and the WSC, the jumping hill must be available for training three days before the competition. The Competition Committee shall consider both snow and weather conditions when scheduling training sessions. It is the responsibility of the Competition Committee to provide optimal training conditions for all competitors.
The TD has to give advice and support the Competition Committee in these questions.

424.5 If possible, training sessions shall be scheduled at the same time of day as the competition. All information pertaining to the training schedule or possible changes must be presented in due time.

424.6 The jumping hill must be in good condition for all training sessions and must be prepared as it would be for the competition. An adequate number of officials and hill packers must be present during the training sessions.

424.7 During all training sessions, distances shall be supervised and the maximum length of inrun decided and fixed by the Jury.

424.8 Working and observation positions shall be assigned to the Jumping Judges and coaches during all training sessions.

424.9 On-site first-aid personnel must be present during all training sessions to provide any necessary medical assistance. Details of the Medical Support Requirements are given in chapter 1 of the FIS Medical Guide containing Medical Rules and Guidelines.

430 The Judging of the Ski Jump

The overall result in jumping consists of the distance jumped and the style points achieved. Distance points are related to the K point, which also serves as the table point. A jumper reaching the K point receives 60 points. Style points may reach a maximum of 60 points.

431 The Judging of the Ski Jump Performance

431.1 Principles

The Judges must judge the outer appearance of the succession of the jumpers movements, from the end of the take off to the passing of the „fall line“ in the outrun, from the aspect of precision (timing of takeoff), perfection (carrying out of the movements), stability (flight-position, outrun) and general impression.

The calculated points that should be given for the ideal performance of the jump are concerned with the

– utilisation of the aerodynamic efficiency of body and ski
– posture of arms and legs, as well as ski position during flight
– succession of movements during landing and
– conduct during outrun.

Also, flight, landing and outrun should convey an aesthetic overall impression. The point deduction for faults and deficiencies must be carried out according to the three groups of appearance of the successions of the jumpers movements: flight, landing and outrun. The judges have to submit their point deductions separately according to the three groups; flight, landing and outrun to calculations (computer and/or calculation office).

431.2 Standards for Position and Movement

431.2.1 *The Flight*

Jumpers must raise their flight trajectory by moving as follows:

– making a bold and aggressive move at takeoff
– proceeding rapidly and smoothly to achieve an optimal flight position
– and initiating preparations for landing at the right moment.

Judging criteria's

– Actively utilisation of the air pressure
– Combination of body and ski to build an entire flying system
– Getting into a optimal and stable body position with left and right sides symmetrically positioned skis, legs and arms.
– The legs have to be fully stretched

Point deductions:

– Maximum point deduction for the entire group of faults 5.0 pts

431.2.2 *Landing*

The jumper must

– come from a stable flight position
  raises head and upper body
  moves the arms on the sides forwards/upwards and
  turns the skis into a parallel position
– just before touching ground with the end of the skis
  splitting the legs and
  bending the knees
– after touching ground by utilising the own muscle power to reduce the landing impact to obtain a smooth landing
– and at the same time
  increase the distance between the legs and bend the back leg even more (telemark position)
  with the skis parallel and obtain the pressure equal on both legs
  to obtain stability stretch both arms horizontally and forwards upwards

Judging criteria's

– A smooth movement from the flight position to landing by straightening the upper body
– split legs and bend knees when touching ground
– take an active part to obtain the impact from landing to reduce speed
– by correct bended knees to obtain a smooth landing (not to deep and not to long)
– positioning the legs in correct telemark position after having obtained the landing impact e.g. separation between feet should be approx. the length of a foot, at least a separation has to be evaluated at the moment of touching ground and in this case the separation has to be expanded during the landing impact.
– skis parallel with distance not more than two ski widths and equal pressure on both skis and on their total surface

Point Deductions:

– Maximum point deduction for landing 5.0 pts
– No telemark landing (feet parallel) at the end of the landing phase (as a single fault) minimum 2.0 pts

431.2.3 *Outrun*

The jumper must:

– After obtaining the landing impact with the correct leg position and bending knees, remain in this telemark position and then rise the upper body and
– Pass through the transition curve and pass the fall line in a higher but stable and relaxed body position with skis parallel or with skis in snowplough position.

Judging criteria's

– After landing a short period of time remaining in a stable telemark position (approx. 10 to 15 meters)
– Skis parallel with distance not more than two ski widths, see art. 431.2.2 (snowplough position is allowed)
– With equal weight on both legs in upright body position skiing safely through the fall line with arms and legs in any relaxed position.

Point Deductions

– Maximum point deduction for the entire group of faults 7.0 pts

– unsteadiness and /or not correct body position throughout the transition curve until passing the fall line 0.5 to 3.0 pts

– passing through the transition curve with both hands back and/or posterior of the body touching the ski/snow/mats. This will also be applied for passing the fall line in this position 4.0 to 5.0 pts

– fall before crossing or on the fall line 7.0 pts

432 The Measuring of Distance

432.1 The Definition of Jumping Distance

The distance to be awarded is measured from the edge of the takeoff to the point where the jumper touches the landing slope. The landing is considered complete when both feet are in full contact with the landing slope. For abnormal landings (one foot landing, e.g. one foot on the snow and the other remaining in the air noticeably longer than it would take for a normal landing) the distance measured will be the point where the first foot is in full contact with the landing slope.

If the landing does not proceed by placing the skis on the snow (a fall), the distance measured will be the point where any part of the jumper's body first touches the landing slope.

432.2 The Measuring of the Jumping Distance by the Distance Measurers

The distance measurers stand on one side of the landing slope and follow the jumper's trajectory with their eyes up to the landing point. The measurer in whose measuring area the viewed jump landed shall mark the jumping distance to an accuracy of 0.5 m. The mark to be awarded is indicated by the placement of the measurer's hand on the distance markings. Half meters are indicated by an additional raising of the free arm. The distance markings shall be placed on both sides of the landing slope to prevent parallax mistakes by the markers (art. 415.1)

432.3 Technical Distance Measuring

432.3.1 Technical measuring devices that measure distances to an accuracy of 0.5 meter and tabulate the distance are permitted for the recording of the jumping distance and the calculation of distance points.

432.3.2 Distances must also be practically measured by distance measurers as a back-up and in case of mechanical failure of the technical measuring device.

433 The Calculating and Announcing of Results

433.1 Style Points

Scoring starts with the scores of five Jumping Judges, and then the highest and lowest scores are eliminated. The three remaining scores are added. The sum of these scores is the total score for style points for a jump.

433.2 Distance Points

The points scored for the distances jumped are calculated on basis of the table point. The point for one m is based on a points table predicated on the K point of the hill.

K-Point Distance	*Meter Value*
20 to 24 m	4.8 pts./m
25 to 29 m	4.4 pts./m
30 to 34 m	4.0 pts./m
35 to 39 m	3.6 pts./m
40 to 49 m	3.2 pts./m
50 to 59 m	2.8 pts./m
60 to 69 m	2.4 pts./m
70 to 79 m	2.2 pts./m
80 to 99 m	2.0 pts./m
100 m and larger	1.8 pts./m
170 m and larger	1.2 pts./m

The K point of the jumping hill acts as the table point; consequently, the K-point distance equals 60 distance points. After the m value of the hill has been determined, the distance difference of the measured lengths for jumps must be calculated. Distances shorter then the K point are calculated by multiplying the m value by the length difference and subtracting this number from 60; by contrast, distances longer than the K point are calculated by multiplying the m value by the length difference and adding this number to 60.

433.3 The Collective Point Score

This score is calculated by adding style and distance points together.
If the total of the style and distance points results in a negative sum, the minimum score is at least zero (no negative points).

433.4 The Total Point Score

This score is calculated by adding together the collective point scores from the competitive jumping rounds. The jumper with the highest total point score is the winner. When two or more jumpers have identical scores, a tie is declared, and the jumpers are awarded the same place. The following position(s) shall be displaced (eliminated) in accordance with the number of tied places. In the final result list, tie placings shall be listed in reverse order of the jumper's start number (the higher start number at first).

433.5 The Announcement of the Results

An unofficial results list will be posted immediately after the competition. The chief of calculations and the competition secretary examine and compare the unofficial results list with the original recording lists. The competition secretary then presents the final list for approval to the Jury. If the Jury has not received any protests, the results list will be published as the official results after the protest time. The protest time is as a rule 15 minutes after the end of the competition. Team captains' meeting can decide on a shorter protest time. The results list shall include the following details:

- the name of the competition
- the date and place of the competition
- the name of the hill and reference to its K point and Hill Size (HS)
- the name and country of each Jumping Judge
- the name and country of each Jury member
- information on the weather (snow conditions, temperature, wind, etc.).
- the number of entered, started, and qualified competitors
- the place, start number, last and first name, country or club, distance jumped, inrun velocity, distance points, style points, collective points per round and at the end of the line total point score for each competitor.

Official results lists must be signed by the TD and the chief of competition. The official results list sent to the FIS must be written in Latin characters.

Additional list of points deductions for flight, landing and out-run, see art. 431.1.

440 Sanctions, Protests, Disciplinary Measures

The following articles 441, 442 and 443 have to be applied on the basis of
art. 223 (sanctions),
art. 224 (procedural guidelines) and
art. 225 (appeals commission)
of the joint regulations for all competitions.

441 Sanctions, Disqualifications

The Jury shall sanction a competitor if he violates the regulations of the ICR or the competition rules or doesn´t follow decisions of the Jury. In particular, if he

441.1 doesn't meet the eligibility requirements of art. 203 (FIS-license);

441.2 enters under or by false data;

441.3 doesn't meet the age-group regulations (art. 406):

441.4 violates the provisions of article:

204 Qualification of Competitors,
205 Competitors Obligations and Rights,
205.6 Support for the competitors,
206 Sponsorship and Advertising,
207 Advertising and Commercial Markings,
215 Entries,
217 Draw,
221 Medical Examinations and Doping

441.5 The Jury shall disqualify a competitor by any of the following reasons:

441.5.1 Competition Equipment (art. 222)

441.5.2 Training on the jumping hill when it is explicitly closed

441.5.3 Arriving late at the start (art. 422.8 and 422.12)

441.5.4 Violating the decision on the length of the inrun (art. 422.1 and 422.2)

441.5.5 Exceeding the start control time (art. 422.10)

441.5.6 Starting before the hill-clear signal or intentionally delaying readiness to start (art. 422.11).

Reasons for disqualification after:
article 441.5.1 Competition Equipment
article 441.5.3 (arriving late at the start);
article 441.5.4 (violating the decision on the length of the inrun or using non authorized start help);
article 441.5.5 (exceeding the start control time) or
article 441.5.6 (starting before the hill-clear signal or intentionally delaying readiness to start).
This refers only on the affected jump during the current round. The jumper will keep an overall standing for that round, zero points.

442 Protests

442.1 Protests against the entry of a competitor must be delivered in writing to the competition secretary before the start of the competition.

442.2 Protests against the actions made by another competitor or an official during the competition must be made in writing to the competition secretary within 15 minutes after the completion of the competition.

442.2.1 At the OWG and WSC, a verbal protest must be submitted to any Jury Member within five (5) minutes.

442.3 Protests concerning incorrect calculations or result misprints shall be considered if sent by registered mail from the competitor's National Ski Association to the event organising association within one month of the date of the competition. If a mistake is proven, the correct results shall be republished and the awards redistributed if necessary.

442.4 The Jury must consider protests if they are made within the allowable time limit and a sum of CHF 100.– has been deposited with the competition secretary.

442.5 Distances measured manually by distance measurers and style scorings of jumping judges are subjective decisions (so called “statements of facts”) on real facts which are not repeatable and therefore, cannot be corrected. Therefore, protests against such subjective decisions aiming at a correction of the result are not allowed. This to include, protests concerning the start control procedure for Ski Jumping in situations of variable wind conditions.

443 Disciplinary Measures

443.1 The Jumping Committee can take the following disciplinary measures against a TD or Jumping Judge who has made irregular or unfair decisions or judgements and has personally misbehaved:

– a written reprimand
– a temporary retraction of the license.

Applications for disciplinary action must be made in writing to the Sub-Committee for Officials, Rules and Control, which will hear the statement of the accused official and then submit a proposal for decision to the Jumping Committee.

443.2 The Jury may take disciplinary measures against a distance measurer who intentionally executes false or improper measurements and has personally misbehaved. The following can be done only if the Jury has been advised by the chief distance measurer to do so:

– an oral reprimand
– a written notification
– temporary exclusion from duties as a distance measurer.

443.3 If a team captain or trainer in a competition infringes the ICR Rules, decisions of the FIS Ski Jumping Committee, of the Jury or if he behaves in an unsporting manner, the Jury may impose a sanction.

3rd Section

Regulations for the Administration of Specific Types of Competitions

450 Types of Ski Jumping Competitions

The following types of Ski Jumping competitions may be held:

– international championships on normal and large hills
– international competitions on one hill (normal or large hill)
– team competitions
– Ski Flying competitions.

451 International Championships on Normal and Large Hills

451.1 OWG and WSC jumping competitions shall be held on hills of two different sizes. A World or Olympic champion will be selected for each hill size. The smaller hill should have a Hill Size (HS) of at least 100. The difference between the hill sizes must be at least 25 m.

451.2 To guarantee an equal opportunity, both jumping hills are to be closed for training and competition 14 days before the first training day of the OWG respectively WSC.
The competition on the normal jumping hill should take place first. The competition dates have to be scheduled in such a way that all three training days/sessions, according to article 424.1 which are also required for the second jumping competition, could only be used after the competition on the first jumping hill.

451.3 For OWG and WSC, FIS general regulations limit entries from each participating National Ski Association to four competitors in each event and a maximum number of six athletes may take part in the official training; different competitors may be used in the different events.

451.4 For OWG and WSC, individual competitions will be held on both jumping hills consisting of two scored rounds of jumps each and a maximum number of 50 participants.
All jumpers (max. four per NSA, see art. 451.3) except the 10 best present in the current WCJ standings must qualify for the participation at an individual competition. For this purpose, on the last training day a trial round and a qualification round will be held, on which only the maximum number of four per nation is allowed to be entered.
The Jury is entitled to change the in-run gate within the group of already qualified jumpers. Furthermore, it is up to these jumpers (10 best in the current WCJ standing) to take part at the qualification round. Irrespective of the number of qualified jumpers, a maximum number of 50 athletes will be filled up. A jumper, who has reached 95% of the maximum length of the longest jump by the jumpers who have to qualify but has a fall, has the right to participate in the competition in addition to the top 50.

One trial jump (round) must be included in the competition program. The decision to use the trial jump is up to the jumper.

451.5 For the starting order for the trainings, qualifications, trials and the first scored rounds, the competitors will be divided into two groups.

– group I for jumpers without WCJ points and
– group II for jumpers with WCJ points.

The starting order within the groups will be determined as follows:

– group I through draw and
– group II in reverse order of the actual WCJ standings.

For the second scored round the starting order is in reverse order of the collective points score from the first scored round.
For the second scored round only the top 30 of the first scored round participate.

451.6 For OWG and WSC, if only one official competitive round of jumps is held and the competition is postponed because of poor weather conditions, the second official competitive round shall be held as soon as weather conditions permit. In such a case, a trial round should precede the second official competitive round. In exceptional cases, where the second official competitive round cannot take place during OWG or WSC, the collective scores from the first competitive round shall be used as the final result. Declaring the trial round of jumps as the first competitive round after this situation has occurred is not permitted.

452 International Competitions on One Hill (Normal or Large Hill)

452.1 Entries, Groupings, the Draw, and Starting Order

452.1.1 A list of competitor entries from each participating National Ski Association must be presented to the race office at least 2 hours before the draw. The list of entry has to contain the following:
Family Name/First Name/Club/Year of birth/Seeded Group.
In exceptional cases the Jury may shorten this time period.

452.1.2 As a rule, competitors will be divided into four groups. Each team may enter one competitor in each group. The number sequence of the groups is IV (best jumpers), III, II, and I (poorest jumpers). This procedure is to be repeated if teams are entering more than four competitors per event.

452.1.3 If a team wishes to enter more then eight competitors, it is necessary to decide at the team captains meeting which group additional competitors will be placed in. In this case, it is possible to form an additional group of competitors, group I-A.

452.1.4 If a team is entering fewer than four competitors, the team leader may choose which group(s) these competitors will be seeded in. However, the team leader may enter only one competitor per Seeded Group.

452.1.5 For competitions with fewer than 40 competitors, the number of Seeded Groups will be decided at the team captains meeting.

452.1.6 For World Cup, Continental Cup and FIS Cup competitions, specific regulations concerning the number of participants per National Ski Association, the Seeded Group resp. for the general mode of execution (e.g. K.O-modus) may be issued.

452.1.7 For the draw of the start order, each Seeded Group will be done separately.

452.1.8 As a rule, the starting order is based on the same sequence as the Seeded Groups, that is, groups I, II, III, and IV. In special situations or conditions, the team captains may decide that a different starting sequence of the groups should occur.

452.1.9 The start order of the second competitive round may be the reverse of the order of the collective scores from the first competitive round. In addition, it is possible to limit the number of competitors allowed to jump.

452.1.10 The start order procedures and the field size (number of competitors) must be announced in the invitation or the Cup competition regulations sent to the participating National Ski Associations.

452.1.11 If announcements concerning art. 452.1.9 were not received by the participating National Ski Associations, it must be decided at the team captains meeting whether to carry out the competition according to art. 452.1.9.

452.2 The Number of Jumps

452.2.1 At all international Ski Jumping competitions, two official competitive rounds shall be held. The competition program must also include one trial round. The decision to participate in the trial round is up to the jumper.

452.2.2 In exceptionally poor weather situations where the second official competitive round cannot take place, the collective scores from the first competitive round shall be used as the final result. In the exception on grounds of unfavourable weather conditions or other unusual circumstances the trial can be cancelled, when on one of the previous days, at least one complete training round has been made. Such a decision must be taken by the Jury before the competition starts. Declaring the trial round of jumps as the first competitive round after this situation has occurred is not permitted.

452.3 Summer Competitions on Plastic Mats

Between June 15 and October 15 (November 15 to March 15 in the southern hemisphere), FIS-sanctioned jumping competitions may take place on plastic hills. These competitions must be registered in the FIS Calendar. During these types of competitions, ICR Rules are in effect.

453 Team Competitions for Ski Jumping

453.1 For a team competition, each team will be made up of four competitors.

453.2 Results are calculated as stated in art. 433 and by addition of the collective points of the four jumpers of the team. Individual competitions cannot occur simultaneously with a team competition. Team competitions cannot be scored as individual competitions.

453.3 The start order of the competitors shall be decided at the previous team captains' meeting.

453.4 For both the trial round and the two official competitive jumps, there are four groups, with one jumper from each team entered per group. The sequential numbers of each member of a group are determined by a specific colour:

- Group I red start numbers
- Group II green start numbers
- Group III yellow start numbers
- Group IV blue start numbers.

Within a group, the sequence of the start order of the team (nation) member is as selected in the draw. Each team decides the order in which its jumpers will start. The competitors must remain in the same group as well in trial round and in both competitive jumps. Immediately after the draw of the team order, a list of the starting order of the jumpers within the team must be submitted to the Competition Committee.

453.5 If the conditions so demand, the length of the inrun can be changed after each group, or a round of only one specific group can be cancelled and restarted.

453.6 The start order will be based on reverse order of the actual World Cup standing. By equal point standings will the start order be made by draw in team captains' meeting between the equal placed teams. Teams without World Cup points start in the beginning of the competition. The start order must be made by draw.

454 Ski Flying Competitions

454.1 The Organisation of Ski Flying Competitions

The FIS Council shall authorise the hosting of all sanctioned Ski Flying competitions. The owners of all Ski Flying hills must agree not to use the facility without FIS consent and sanctioning.

454.2 Entries

Competitors in Ski Flying competitions can be entered only by their own National Ski Association. The national association has full responsibility for competitors' actions.

454.3 Forejumpers

The organiser is responsible for the arrangement of twelve qualified forejumpers on each day. These jumpers may not be part of the official competition but must be entered by their National Ski Association acc. IWO Art. 215. All of them must be capable to start from the starting point established by the Jury for the competition round. All forejumpers have to be at least 18 years old.

454.4 The Number of Days and Jumps

Ski Flying events will take place during four days. If any of the rounds have to be cancelled and repeated, no more than four competition flights per day and jumper are allowed.

454.4.1 Ski Flying World Cup

The WCJ rules will be applied without restriction regarding participation right, starting order for training, qualification and competition as well as the carrying out as such.

454.4.2 Ski Flying World Championship (SFWC)

454.4.2.1 On the first day of the event the official training and the qualification round takes place. The second and third day are competition days for the individual event and consist of a trial jump and two competition rounds each. The total score as the sum of all collective point scores of the competition rounds are counted for the World Championship. The fourth day will be conducted as a team event.

454.4.2.2 Each nation may enter up to six competitors, all of who may jump in the training session. At the qualification round, only the maximum number of four athletes per nation is allowed to be entered. The qualification round reduces the number of participants to 40 for the first competition round.
The starting order for training, qualification, trial and competition rounds as well as the modus as such is the same as for individual competitions at World Cups in Ski Flying with the following modification for the second competition day of the individual event: at the trial and competition rounds only the best 30 of the previous day are allowed to take part (see art. 451.4 and 451.5)

454.4.2.3 If only one competition round is held on a competition day due to unfavourable conditions or if the competition is postponed and if the regulation according to art. 454.4 is kept, the number of competition rounds which were carried out counts for the result. As a consequence the result of the World Ski Flying Championships can consist of only one competition round.

454.4.3 Scoring valuation of the Ski Flying

At Ski Flying events the K-point distance as calculation point equals 120 distance points and the meter value is 1,2 pts./m.

THE INTERNATIONAL SNOWBOARD COMPETITION RULES (ICR)

BOOK VI
JOINT REGULATIONS FOR SNOWBOARDING

SLALOM / GIANT SLALOM
TRIPLE-S
PARALLEL EVENTS
SNOWBOARD CROSS
SNOWBOARD HALFPIPE
SNOWBOARD BIG AIR
SNOWBOARD SLOPESTYLE

APPROVED BY THE 48TH INTERNATIONAL SKI CONGRESS, KANGWONLAND (KOR)

WEB EDITION NOVEMBER 2013

FÉDÉRATION INTERNATIONALE DE SKI
INTERNATIONAL SKI FEDERATION
INTERNATIONALER SKI VERBAND

INTERNATIONAL SKI FEDERATION
FEDERATION INTERNATIONALE DE SKI
INTERNATIONALER SKI VERBAND

Blochstrasse 2, CH-3653 Oberhofen / Thunersee, Switzerland

Telephone: +41 33 244 61 61
Fax: +41 33 244 61 71
Website: www.fis.ski.com

© Copyright: International Ski Federation FIS, Oberhofen, Switzerland, 2013.
No part of this book may be reproduced in any form or by any means without the written permission of the International Ski Federation

Printed in Switzerland

Oberhofen, November 2013

Table of Contents

1st Section

200 Joint Regulations for all Competitions....8
201 Classification and Types of Competitions....8
202 FIS Calendar....10
203 Licence to participate in FIS Races (FIS Licence)....11
204 Qualification of Competitors....13
205 Competitors Obligations and Rights....14
206 Sponsorships and Advertising....15
207 Advertising and Commercial Markings....16
208 Electronic Media including Television, Radio and New Media....17
209 Film Rights....20

210 Organisation of Competition....21
211 The Organisation....21
212 Insurance....21
213 Programme....22
214 Announcements....22
215 Entries....22
216 Team Captains' Meetings....23
217 Draw....23
218 Publication of Results....23
219 Prizes....25

220 Service Personnel, Suppliers and Firms' Representatives....25
221 Medical Services, Examinations and Doping....26
222 Competition Equipment....27
223 Sanctions....28
224 Procedural Guidelines....30
225 Appeals Commission....31
226 Violation of Sanctions....33

2nd Section

Rules Common to Snowboard Competitions....34

2000 Organisation....34
2001 Organising Committee and the Jury....34
2002 Hosting Duties of the Organising Committee....38
2003 Basic Costs of the Organising Committee....38
2004 The Jury....38
2005 The Technical Delegate (TD)....43
2006 Judges....48
2007 Course Setter / Course Builder....52
2008 Acceptance / Rights and Duties....53
2009 Forerunners....54
2010 Competitors' Responsibilities....55

2011 Age Limits 55

2020 Start, Finish, Timing and Calculations 57
2021 Start and Finish Officials 59
2022 The Start 60
2023 Public Address System 62
2024 Course and Competition.....62
2025 The Finish 64
2026 Microphones at Start and Finish.....65
2027 Calculation and Announcement of Results.....65
2028 Award Ceremony 67

2030 Start Order 67
2031 Starting Order and Seeding.....67
2032 Start Intervals 68
2033 Provisional Re-runs 68
2034 Interrupted Competition or Training.....69
2035 Termination of a Competition 70
2036 Appeal 70
2037 Not Permitted to Start / Sanction.....70
2038 Penalties / Sanction 70
2039 Disqualifications /Sanctions.....71

2040 Appeals Commission.....71

2050 Protests.....71

2051 Types of Protests 71
2052 Submission of Protests.....72
2053 Protest Deadlines.....72
2054 Form of Protests.....73
2055 Authorisation 73
2056 Settlement of Protests by the Jury 73
2057 Right of Appeal.....74
2058 Homologation 74

2070 Gate Judging 75
2071 Gate Judges.....76
2072 Responsibility to the Competitor.....77
2073 Immediate Announcement of Sanctions / Disqualifying Faults.....77
2074 Duties of the Gate Judge at Completion of each run.....77
2075 Duties of the Gate Judge at the Conclusion of the Competition.....77
2076 Supplemental Duties of the Gate Judge.....78
2077 Location of the Gate Judge 78
2078 Number of Gate Judges 79
2079 Support of the Gate Judges 79

2080 Video Control.....79
2085 Gate flags.....80
2089 Poles 80

2090 Competitors Equipment.....81

3rd Section

2100 SLALOM 82
2101 Technical Data 82
2102 The Courses 83
2103 Course Setting 83
2104 Inspection of the Course 84
2105 Start 84
2106 Execution of the Slalom 85
2107 Competition Clothing 85

2200 GIANT SLALOM 86
2201 Technical Data 86
2202 The Courses 86
2203 Course Setting 87
2204 Inspection of the Course 87
2205 Start 87
2206 Execution of the Giant Slalom 88
2207 Competiton Clothing 88

2400 Triple Slalom Event, (TSL) 89
2401 Definition 89
2402 Technical Data 89
2403 Choice and Preparation of the Course 89
2404 The Courses 90
2405 Start 90
2406 Finish, see article 2506 for Parallel events 91
2407 Course Setting, see article 2507 for Parallel events 91
2408 Timing 91
2409 Execution of a Triple Slalom (TSL) event 91
2410 Control of the Races, see article 2510 for Parallel events 94
2411 Disqualifications / Sanctions 94
2412 Final ranking 94

2500 PARALLEL EVENTS 95
2501 Definition 95
2502 Technical Data 95
2503 Choice and Preparation of the Course 97
2504 The Courses 97
2505 Start 97
2506 Finish 98
2507 Course Setting 98
2508 Timing and Data 99
2509 Execution of Parallel Events 100
2510 Control of the Races 104
2511 Disqualifications / Sanctions 104
2512 Penalty Time 105
2513 Competiton Clothing 105
2514 Parallel Team Event 105

2515 Technical Data 105
2516 Courses 105
2517 Course setting 105
2518 Inspection 106
2519 Execution of a Parallel Team 106
2520 Start 107
2521 Protest 107
2522 Did not start (DNS) in Parallel Finals 107
2523 Inspection of the courses 107
2524 Control of the Races 107
2525 Disqualifications / Sanctions 107
2526 Final Ranking according Parallel Events ranking 2509.2 108

2600 SNOWBOARD HALFPIPE 109
2601 Technical Data 109
2602 The Halfpipe site 109
2603 Training 110
2604 Competition formats 110
2605 Execution of a Halfpipe 116
2606 Seeding 116
2607 Competitors Equipment 117
2608 Public Address System 117
2609 Judges Stand 117
2610 Start and Finish officials 117
2611 Start 117
2612 Finish 118
2613 Judges (Competition Levels) 118
2614 Halfpipe Judging 118
2615 Judges/Head Judge responsibilities and duties 119
2616 Snowboard Halfpipe Scoring System 121
2617 Judging Criteria 122

2700 SNOWBOARD CROSS (SBX) 125
2701 Technical Data 125
2702 Courses 126
2703 Course setting 127
2704 Inspection/Training 127
2705 Execution of a Snowboard Cross 127
2706 SBX Finals Parings 131
2707 Start 132
2708 Contact 133
2709 Protests 133
2710 Final Ranking 134
2711 Snowboard Cross Team (SBX Team) 134
2712 Technical Data 134
2713 Courses 135
2714 Course setting 135
2715 Inspection/Training 135
2716 Execution of a SBX Team 135
2717 Start 136
2718 Contact 137
2719 Protest 137
2720 Final Ranking 137

2800 Big Air 138
2801 Technical Data 138
2802 Big Air Site 138
2803 Training 139
2804 Competition Format 139
2805 Execution of a Big Air 147
2806 Competitors Equipment 147
2807 Public Address System 148
2808 Judges Stand 148
2809 Big Air Judging 148
2810 Big Air Scoring System 149
2811 Judging Criteria 149

4th Section

Special Rules 152

2900 Competitions under Artificial Light 152

3000 SNOWBOARD SLOPESTYLE 153
3001 The Slopestyle 153
3002 Technical Data 153
3003 Competition equipment 155
3004 Execution of the Slopestyle 155
3005 Public address system 157
3006 Judges Stand 157
3007 Slopestyle Judging 157
3008 Slopestyle Scoring System 160

200 Joint Regulations for all Competitions

200.1 All events in the FIS Calendar must be held under the applicable FIS Rules[1].

200.2 Organisation and Conduct

Rules and instructions for the organisation and conduct of the various competitions are to be found in their respective rules.

200.3 Participation

Competitions listed in the FIS Calendar are only open to all properly licensed competitors entered by their National Ski Associations in accordance with current quotas.

200.4 Special Regulations

The FIS Council can authorise a National Ski Association to adopt rules and regulations to organise national or international competitions with different grounds for qualification but only provided that they do not go beyond the limits laid down in the present rules.

200.5 Control

All competitions listed in the FIS Calendar must be supervised by a Technical Delegate of the FIS.

200.6 Every legal sanction imposed and published in respect of a competitor, official or trainer will be recognised by the FIS and the National Ski Associations respectively.

201 Classification and Types of Competitions

201.1 Competitions with Special Rules and/or Limited Participation

National Ski Associations affiliated with the FIS - or clubs belonging to these National Ski Associations with the approval of their association - may invite neighbouring National Ski Associations or their clubs to their own competitions. But these competitions must not be promulgated or announced as international competitions, and the limitation must be made clear in the announcement.

201.1.1 Competitions with special rules and/or limited participation or including non-members may be held under special competition rules as approved by the FIS Council. Any such rules must be published in the announcement.

201.2 Competitions with Non-Members of the FIS

The FIS Council can authorise one of its member National Ski Associations to invite a non-member organisation (military etc.) to competitions, or accept invitations from such an organisation.

[1] Throughout the ICR, the use of the masculine he/his, etc also includes the feminine she/her, etc

201.3 Classification of Competitions

201.3.1 Olympic Winter Games, FIS World Ski Championships and FIS World Junior Ski Championships

201.3.2 FIS World Cups

201.3.3 FIS Continental Cups

201.3.4 International FIS Competitions (FIS Races)

201.3.5 Competitions with Special Participation and/or Qualifications

201.3.6 Competitions with Non-Members of the FIS

201.4 FIS Disciplines

A discipline is a branch of a sport and may comprise one or several events. For example Cross-Country Skiing is a FIS Discipline, whereas the Cross-Country Sprint is an Event.

201.4.1 Recognition of Disciplines in the International Ski Federation

New disciplines, comprising one or several events, widely practised in at least twenty-five countries and on three continents may be included as part of the programme of the International Ski Federation.

201.4.2 Exclusion of Disciplines from the International Ski Federation

If a discipline is no longer practised in at least twelve National Ski Associations on at least two continents the FIS Congress may decide to exclude the discipline from the programme of the International Ski Federation.

201.5 FIS Events

An event is a competition in a sport or in one of its disciplines. It results in a ranking and gives rise to the award of medals and/or diplomas.

201.6 Types of Competitions

International competitions consist of:

201.6.1 Nordic Events

Cross-Country, Rollerskiing, Ski-Jumping, Ski-Flying, Nordic Combined, Team Competitions in Nordic Combined, Nordic Combined with Rollerskiing or In-line, Team Ski-Jumping, Ski-Jumping on plastic jumping hills, Popular Cross-Country races

201.6.2 Alpine Events

Downhill, Slalom, Giant Slalom, Super-G, Parallel Competitions, Combined, KO, Team Competitions

201.6.3 Freestyle Events

Moguls, Dual Moguls, Aerials, Ski Cross, Half Pipe, Slopestyle, Team Competitions

201.6.4 Snowboard Events

Slalom, Parallel Slalom, Giant Slalom, Parallel Giant Slalom, Super-G, Half Pipe, Snowboard Cross, Big Air, Slopestyle, Team Competitions

201.6.5 *Telemark Events*

201.6.6 *Firngleiten*

201.6.7 *Speed Skiing Events*

201.6.8 *Grass Ski Events*

201.6.9 *Combined Events with other Sports*

201.6.10 *Children's, Masters, Disabled Events, etc.*

201.7 FIS World Championship Programme

201.7.1 To be included in the programme of the FIS World Championships, events must have a recognised international standing both numerically and geographically, and have been included for at least two seasons in the World Cup before a decision about their admission can be considered.

201.7.2 Events are admitted no later than three years before specific FIS World Championships.

201.7.3 A single event cannot simultaneously give rise to both an individual and a team ranking.

201.7.4 Medals may only be awarded at the FIS World Championships and FIS Junior World Championships in all disciplines (Alpine, Nordic, Snowboard, Freestyle, Grass Skiing, Rollerski, Telemark, Speed Skiing) when there are a minimum of 8 nations participating in team competitions and 8 nations represented in an individual event.

202 FIS Calendar

202.1 Candidature and Announcement

202.1.1 Each National Ski Association is entitled to present its candidature for the organising of the FIS World Ski Championships in accordance with the published "Rules for the Organisation of World Championships"

202.1.2 For all other competitions, the registrations for inclusion in the International Ski Calendar have to be made to FIS by the National Ski Association according to the Rules for the FIS Calendar Conference published by the FIS.

202.1.2.1 The applications of the National Ski Associations (NSA) have to be sent to FIS using the FIS Calendar program (ftp://ftp.fisski.ch/Software/Programs/) by 31st August (31st May for the Southern Hemisphere).

202.1.2.2 *Allocation of competitions*
Allocation of the competitions to the National Ski Associations is made through the electronic communication process between FIS and the National Ski Associations. In the case of FIS World Cup competitions, the calendars are subject to the approval of the Council, on proposal of the respective Technical Committee.

202.1.2.3 *Homologations*

Competitions that appear in the FIS Calendar may only take place on competition courses or jumping hills homologated by the FIS.
The homologation certificate number must be indicated when applying for the inclusion of competition in the FIS Calendar.

202.1.2.4 *Publication of the FIS Calendar*

The FIS calendar is published by FIS on the FIS website www.fis-ski.com. It will be updated to reflect cancellations, postponements and other changes continuously by FIS.

202.1.2.5 *Postponements*

In case of the postponement of a competition listed in the FIS Calendar, the FIS has to be informed immediately and a new invitation must be sent to the National Ski Associations, otherwise the competition cannot be considered for FIS points.

202.1.2.6 *Calendar Fees*

In addition to the annual subscription, a calendar fee is set by the FIS Congress and is due for each year and for each event listed in the FIS Calendar. For additional events, a 50% surcharge will be made in addition to the regular calendar fee for applications submitted 30 days before the date of the competition. The calendar fee for a competition that has to be rescheduled remains the responsibility for payment in full of the original organising National Ski Association.

At the beginning of the season, each NSA will receive an invoice for 70 % of its total invoice from the previous season. This amount will be debited from its FIS account. At the end of the season each NSA will receive a detailed invoice for all registered competitions during the season. The balance will be subsequently be debited or credited to the NSA account at FIS.

202.1.3 *Appointment of Race Organiser*

In the event that the National Ski Association appoints a race organiser, such as an affiliated ski club, it shall do so using the form “Registration Form National Ski Association and Organiser” or by means of a similar written agreement. An application by a National Ski Association for inclusion of an event on the International Ski Calendar shall mean that the necessary agreement to organise the event has been established.

202.2 **Organisation of Races in other Countries**

Competitions which are organised by other National Ski Associations may only be included in the FIS Calendar when the National Ski Association of the country concerned where the competitions will be organised gives its approval.

203 Licence to participate in FIS Races (FIS Licence)

A licence to participate in FIS races is issued by a National Ski Association to competitors who fulfil the criteria for participation through registering the competitor with FIS in the respective discipline(s).

203.1 The FIS licence year begins on July 1st and finishes on June 30th of the following year.

203.2 To be eligible for participation in FIS events, a competitor must have a licence issued by his National Ski Association. Such a licence shall be valid in the Northern and Southern hemispheres for the licence year only. The validity of a licence can be limited to participation in one specific country or in one or more specific events.

203.2.1 The National Ski Association must guarantee that all competitors registered with a FIS License to participate in FIS races accept the Rules of the International Ski Federation, in particular the provision which foresees the exclusive competence of the Court of Arbitration for Sport as the court of appeal in doping cases.

203.3 A National Ski Association may only issue a FIS licence to participate in FIS races when the competitor has proven his nationality and therefore eligibility by submitting a copy of his passport and signed the Athletes Declaration in the form approved by the FIS Council and returned it to his National Ski Association. All forms from under-age applicants must be counter signed by their legal guardians. Both the copy of the passport and signed Athletes Declaration must be made available to FIS on request.

203.4 During the FIS licence year, a competitor may only participate in International FIS competitions with a FIS licence to participate in FIS races issued by one National Ski Association.

203.5 Application for a change of FIS Licence Registration

All applications to change licence registration from one member National Ski Association to another are subject to consideration by the FIS Council at its Meetings in the spring. In principle an application to change licence registration will not be granted unless the competitor demonstrates his personal association with the new nation.

Prior to submitting an application to change licence registration a competitor must possess the citizenship and passport of the country for which he wishes to compete. In addition, the competitor must have had his principal legal and effective place of residence in the new country for a minimum of two (2) years immediately prior to the date of the request to change registration to the new country/National Ski Association. An exception to the two year residency rule may be waived if the competitor was born in the territory of the new country, or whose mother or father is a national of the new country. Applications will not be accepted if a parent has obtained a passport for the new country, but is not resident, and/or there is no family ancestry. Furthermore the competitor is required to submit a detailed explanation with the application about his personal circumstances and the reason for requesting a change of licence registration.

203.5.1 If a competitor has already participated in FIS calendar events for a National Ski Association, he must have the written agreement to be released from the former National Ski Association in addition to the citizenship, passport and residency requirements in art. 203.5 before the new National Ski Association may submit a request to FIS for a change of registration.

If such a written agreement is not given, the competitor may not participate in any FIS calendar events for a period of twelve months from the end of the last season in which he competed for his present National Ski Association, nor may he be issued with a licence to participate in FIS races by the new National Ski Association.

These rules are also valid when a competitor has more than one nationality and would like to change National Ski Association licence registration.

203.5.2 The FIS Council reserves the right in its absolute discretion, to grant or to decline to grant, a change of licence notwithstanding the fulfilment of the aforementioned conditions where it deems it is contrary to the spirit of the rule and in the best interests of the International Ski Federation to do so (e.g. to decline to grant a change of licence if a member National Ski Association tries to “import” a competitor).

203.5.3 In the event that a competitor does not fulfil all the criteria required to apply for a change of National Ski Association licence registration, the onus shall be on the competitor to demonstrate in writing to the satisfaction of the FIS Council that exceptional circumstances exist and it is in the best interests of the International Ski Federation to grant the change.

203.5.4 A competitor will retain his FIS points if he changes his National Ski Association under the condition that the former National Ski Association granted the release of the competitor.

203.5.5 In the event that any of the documents for an application to change licence registration submitted by the National Ski Association (letter of release from the former National Ski Association, passport, residency papers) are found to be false, the FIS Council will sanction the competitor and the new National Ski Association.

204 Qualification of Competitors

204.1 A National Ski Association shall not support or recognise within its structure, nor shall it issue a licence to participate in FIS or national races to any competitor who:

204.1.1 has conducted himself in an improper or unsportsmanlike manner or has not respected the FIS medical code or anti-doping rules,

204.1.2 accepts or has accepted, directly or indirectly, any money-payments for the participation at competitions,

204.1.3 accepts or has accepted a prize of a higher value than fixed by article 219,

204.1.4 permits or has permitted his name, title or individual picture to be used for advertising, except when the National Ski Association concerned, or its pool for this purpose, is party to the contract for sponsorship, equipment or advertisements.

204.1.5 knowingly competes or has competed against any skier not eligible according to the FIS Rules, except if:

204.1.5.1 the competition is approved by the FIS Council, is directly controlled by the FIS or by a National Ski Association, and the competition is announced "open",

204.1.6 has not signed the Athletes Declaration,

204.1.7 is under suspension.

204.2 With the issuance of a licence to participate in FIS competitions and entry the National Ski Association confirms, that valid and sufficient accident insurance for training and competition is in place for the competitor and assumes full responsibility.

205 Competitors Obligations and Rights

205.1 The competitors are obliged to make themselves familiar with the appropriate FIS Rules and must comply with the additional instructions of the Jury. Competitors must also follow the FIS rules regulations.

205.2 Competitors are not permitted to use doping. (see FIS Anti-Doping Rules and Procedural Guidelines).

205.3 As stated in the Athletes Declaration, competitors have the right to inform the Jury of safety concerns they may have regarding the training and competition courses. More details are given in the corresponding discipline rules.

205.4 Competitors who do not attend the prize-giving ceremonies without excuse lose their claim to any prize including prize money.
In exceptional circumstances, the competitor may be represented by another member of his team, but this person has no right to take his place on the podium.

205.5 Competitors must behave in a correct and sportsmanlike manner towards members of the Organising Committee, volunteers, officials and the public.

205.6 Support for the Competitors

205.6.1 A competitor is registered with FIS by his National Ski Association to participate in FIS races may accept:

205.6.2 full compensation for travel cost to training and competition,

205.6.3 full reimbursement for accommodation during training and competitions,

205.6.4 pocket money,

205.6.5 compensation for loss of income according to decisions of his National Ski Association,

205.6.6 social security including insurance for training and competition,

205.6.7 scholarships.

205.7 A National Ski Association may reserve funds to secure a competitor's education and future career after retiring from active competitive skiing.
The competitor has no claim to these funds which shall be dispensed only according to the judgement of his National Ski Association.

205.8 Gambling on Competitions

Competitors, trainers, team officials and technical officials are prohibited from betting on the outcome of competitions in which they are involved.

Reference is made to the FIS Betting and other Anti-Corruption Violations Rules July 2013.

206 Sponsorships and Advertising

206.1 A National Ski Association or its pool may enter into contracts with a commercial firm or organisation for financial sponsorship and or the supply of goods or equipment if the specific company or organisation is acknowledged as an Official Supplier or Sponsor by the National Ski Association.
Advertising using photographs, likeness or names of FIS competitors with any sportsman not eligible according to either the FIS eligibility rules or the eligibility rules of the IOC, is forbidden.
Advertising with or on competitors with tobacco or alcohol products or drugs (narcotics) is forbidden.

206.2 All compensation under such contracts must be made to the National Ski Association or its ski pool which shall receive the compensation subject to the regulations of each National Ski Association.
Competitors may not directly receive any part of such compensation except as stated in art. 205.6. The FIS may at any time call for a copy of the contract.

206.3 Equipment goods supplied to and used by the national team must, with reference to markings and trademarks, conform with the specifications stated in art. 207.

206.4 Competition Equipment at FIS Events

Only the competition equipment, according to the FIS rules on advertising, provided by the National Ski Association, complete with the commercial markings approved by the National Ski Association, may be worn in FIS World Cup and FIS World Ski Championship competitions. Obscene names and/or symbols on clothing and equipment are forbidden.

206.5 Competitors are not permitted to take off one or both skis or snowboard before crossing the red line in the finish area, as defined by the organiser.

206.6 At FIS World Ski Championships, FIS World Cups and all events of the FIS Calendar, a competitor is not allowed to take equipment (skis/board, poles, ski boots, helmet, glasses) to the official ceremonies which have anthems and/or flag raising. Holding/carrying equipment on the victory podium after conclusion of the whole ceremony (handing over trophies and medals, national anthems) for press photos, pictures, etc. is however permitted.

206.7 Winners presentation / Equipment on the podium

At FIS World Ski Championships and all events of the FIS Calendar, a competitor is allowed to take the following equipment on the podium:

- Skis / Snowboards
- Footwear: The athletes may wear their boots on their feet, but are not allowed to wear them anywhere else (such as around their neck). Other shoes cannot be taken on the podium during presentation except if they are worn on the feet.
- Poles: not on/around skis, normally in the other hand

- Goggles: either worn or around the neck
- Helmet: if worn only on the head and not on another piece of equipment, e.g. skis or poles
- Ski straps: maximum of two with name of the producer of skis; eventually one can be used for a wax company
- Nordic Combined and Cross-Country Ski Poles Clips. A clip can be used to hold the two poles together. The clip can be the width of the two poles, though not wider than 4 cm. The length (height) can be 10 cm. The long side of the clip is to be parallel to the poles. The commercial marking of the pole manufacturer can cover the entire surface of the clip.
- All other accessories are prohibited: waist bags with belt, phones on neckbands, bottles, rucksack/backpack, etc.

206.8 An unofficial presentation (flower ceremony) of the winner, and the winners ceremony immediately after the event in the event area with the national anthem even before the protest time has expired, is allowed at the organiser's own risk. Visible wearing of the starting bibs is mandatory.

206.9 Visible wearing of the starting bib of the event or other outerwear of the NSA is mandatory in the restricted corridor (including the leader board and TV interview locations).

207 Advertising and Commercial Markings

Technical Specifications about the size, the form and the number of commercial markings are decided by the FIS Council each spring for the following competition season and published by the FIS.

207.1 The rules covering advertising on equipment must be followed.

207.2 Any competitor who breaches the rules is subject to sanction, as provided for in art. 223.1.1. An offence for which a sanction may apply and a penalty be imposed is defined as conduct that is in violation or non-observance of competition rules.

207.3 If a National Ski Association fails to enforce these rules or for any reason prefers to refer the case to the FIS, the FIS may take immediate steps to suspend a competitor's licence. The competitor concerned and/or his National Ski Association have the right to make an appeal before a final decision is taken.

207.4 If an advertiser uses the name, title or individual picture of a competitor in connection with any advertisement, recommendation or sale of goods without the approval or knowledge of the competitor, the competitor may give a "power of attorney" to his National Ski Association or to the FIS to enable them, if necessary, to take legal action against the company in question. If the competitor concerned fails to do so, the FIS shall judge the situation as if the competitor had given permission to the company.

207.5 The FIS Council shall review if and how far infractions or breaches of rules have taken place in regard to qualification of competitors, sponsorship and advertising and support for the competitors.

207.6 In all competitions of the FIS Calendar (especially for the FIS World Cups) the "FIS Advertising Guidelines" must be observed in regard to advertising possibilities in the competition area, respectively in the TV area.
These "FIS Advertising Guidelines", approved by the FIS Council, are an integral part of the FIS contracts with cup organisers.

208 Exploitation of Electronic Media Rights

208.1 General Principles

208.1.1 Olympic Winter Games and FIS World Championships
All Media rights to the Olympic Winter Games and FIS World Championships belong to the IOC and to the FIS respectively, and are subject to separate contractual arrangements.

208.1.2 Rights owned by the member National Ski Associations
Each FIS affiliated National Ski Association that organises events in its country which are included in the annual FIS calendars, has the authority as the owner of the electronic media rights to enter into contracts for the sale of the electronic media rights on those events. In cases where a National Ski Association organises events outside its own country, these rules also apply, subject to bi-lateral agreement with the National Ski Association of the country where the event takes place.

208.1.3 Promotion
Contracts shall be prepared in consultation with the FIS with the intention of giving the widest promotion and exposure to the sports of skiing and snowboarding and considering the best interests of the National Ski Associations.

208.1.4 Access to events
For all competitions, admission of personnel and their equipment to the media areas will be limited to those having the necessary accreditation and access passes. Priority access will be given to rights holders and the system of accreditation and access control must avoid possible abuse by non-rights holders.

208.1.5 Control by the FIS Council
The FIS Council exercises control over the adherence to the principles of this Rule by National Ski Associations and all organisers. Should a contract or individual clauses thereof, create a major conflict of interest for the FIS, a member National Ski Association or its organiser, then this will be evaluated by the FIS Council. Full information will be provided so that the appropriate solution can be found.

208.2 Definitions

In the context of this rule the following definitions will apply:

“Electronic Media Rights” means the rights for Television, Radio, Internet and Mobile devices.

“Television rights” means the distribution of television images, both analogue and digital, comprising video and sound, by means of terrestrial transmitters, satellite, cable, fibre or wire for public and private viewing on

television screens. Pay-per-view, subscription, interactive TV, video on demand services, IPTV or similar technologies, are also included in this definition.

“Radio rights” means the distribution and reception of radio programmes, both analogue and digital, over the air, by wire or via cable to devices, both fixed and portable.

“Internet” means access to images and sound through interconnected computer networks.

“Mobile and portable devices” means the provision of images and sound through a telephone operator and receivable on mobile telephone or other non fixed devices, such as Personal Digital Assistants.

208.3 Television

208.3.1 *Standard of production and promotion of competitions*

In the agreements concerning production with a TV organisation or agency acting as host broadcaster, the quality of TV transmissions for ski and snowboard events published in the FIS Calendar – especially for FIS World Cup competitions – must be considered. Of particular importance, while taking into consideration applicable national laws and rules affecting broadcasting, are:

a) Top quality and optimal production of a TV signal (for live or deferred transmission depending on the event) in which sport is the centrepiece;

b) Adequate consideration and appearance of venue advertising and event sponsors;

c) A standard of production in conformity with the FIS TV Production Guidelines and appropriate to current market conditions for the discipline and to the level of the FIS competition series. This means live coverage of the entire event including the winner presentation for live transmission (unless circumstances determine that a live production is not provided). This coverage shall be produced in a neutral way, shall not concentrate on any athlete or nation and shall show all competitors

d) The live international signal of the host broadcaster must include appropriate graphics in English, particularly the official FIS logo, timing and data information and results, and international sound.

e) Where it is appropriate to the individual TV market, there should be live TV transmission in the country where the event takes place and in other countries with a high interest.

208.3.2 *Production and Technical costs*

Except when otherwise agreed between the National Ski Association and the agency/company managing the rights, the cost of producing the television signal for the exploitation of the different rights will be borne by the broadcaster having acquired the rights in the country where the competition takes place or a production company mandated to produce the signal by the company owning the rights. In certain cases, the organiser or the National Ski Association may assume these costs.

For each of the different rights granted under this rule the technical expenses that are to be paid for by those organisations that have acquired the rights and which are seeking to access the television signal (original picture and sound without commentary), have to be agreed between the producing company or the agency/company managing the rights, as applicable. This also applies to any other production costs that may be requested.

208.3.3 *Short extracts*

Short extracts granting news access for non-rights holders are to be provided to television companies according to the following rules. It is noted that in a number of countries national legislation governs the showing of short extracts in news programmes.

These extracts may only be used in regularly scheduled news programmes and cannot be kept for archive purposes

a) In those countries where legislation exists regarding news access to sporting events then this legislation will always hold precedence for reporting on FIS events.

b) In those countries where no legislation exists regarding news access by competing networks and provided that agreements between the company managing the rights and the primary rights holder take precedence then short extracts of a maximum of 90 seconds news access will be granted to competing networks by the agency/company managing the rights for transmission four hours after the rights holding network has shown the competition. The use of this material will cease 48 hours after the end of the competition. If the rights holding network delays its transmissions by more than 72 hours from the end of the competition, then competing networks can show extracts of a maximum of 45 seconds commencing 48 hours after and ending 72 hours after the event itself. Any request to exploit short extracts shall be addressed to the agency/company managing the rights which shall grant to the broadcasters access to the short extracts subject to agreement regarding the technical costs incurred to receive the material.

c) In those countries where no transmission rights have been purchased by a television company, all television organisations will be able to transmit short extracts of 45 seconds as soon as the material is available, subject to agreement with the agency/company managing the rights regarding the technical costs to be incurred to receive the material. Permission for the use of this material will expire after 48 hours.

d) Short extracts will be produced by the host broadcaster or the agency/company managing the rights and distributed by that agency/company, taking into consideration 208.3.2 above.

208.4 **Radio**

The promotion of FIS events through radio programmes will be encouraged by making available accreditation to the principle radio station(s) in each interested country. Access to the venue will be granted solely to those radio organisations that have obtained the necessary contractual authorisation from the rights holder, and will be only for the production of radio (audio) programmes. If accepted by national practice and the author-

isation is granted, these programmes can also be distributed on the internet site of the radio station.

208.5 Internet

Unless the contract for the sale of the Electronic Media Rights on FIS events states otherwise, each television rights holder that also acquires the internet rights, will ensure that video streams from its website other than short extracts are geoblocked against access from outside its own territory. Regularly scheduled news bulletins containing material of FIS events may be streamed on the rights holding broadcaster's website, provided no changes are made to the bulletin as transmitted in the original programme.

Video and audio material produced in public areas where accreditation, tickets or other permissions are not required to gain access must not contain race footage. It is recognised that new technology provides members of the public with the possibility to produce unauthorised video recordings that may be posted on websites. Appropriate information advising that the unauthorised production and use of video material is prohibited and that legal proceedings could be taken, will be shown at all entrances and printed on entrance tickets.

All National Ski Associations and the rights holders/agencies will give permission for short extracts to be placed on the FIS website for non-commercial use subject to the following conditions:

a) When short extracts have not been acquired for Internet distribution the maximum duration of the news material from FIS competitions will be 30 seconds per discipline/per session and will be accessible on the FIS website until 48 hours after the end of the competition. The financial conditions relating to the provision of this material will be agreed between the FIS and the rights owner.

b) The material will be provided by the rights owner or host broadcaster as soon as possible, but at the latest six hours after the end of the competition.

208.6 Mobile and portable devices

In the cases where the rights for distribution by mobile and portable devices have been awarded, the rights purchaser/operator will be free to produce from the television signal the content it considers best meets the needs of its customers. Any live streaming of television programmes on a national basis using these devices shall not be altered from that available through other distribution channels.

In countries where no mobile distribution rights have been sold, short extracts or clips of a maximum duration of 20 seconds will be offered to operators when the material has been produced and for a period of 48 hours on the condition that the operators pay all related technical costs to the agency/company managing the rights.

208.7 Future developments

The principles contained in this Rule 208 shall be the basis for the exploitation of Electronic Media Rights to FIS events in the future. The FIS Council, on the recommendation of the National Ski Associations, the relevant commissions and experts, will establish the conditions considered appropriate to each new development.

209 Film Rights

All agreements regarding film productions of FIS competitions will be between the film producer and the National Ski Association or the company managing the related rights. All contractual arrangements regarding the exploitation of other media rights will be respected.

210 Organisation of Competition

211 The Organisation

211.1 The Organiser

211.1.1 The Organiser of a FIS competition is the person or group of persons who make the necessary preparations and directly carry out the running of the competition in the resort.

211.1.2 If the National Ski Association itself is not the competition organiser, it may appoint an affiliated club to be the organiser.

211.1.3 The organiser must ensure that accredited persons accept the regulations regarding the competition rules and Jury decisions, and in World Cup races the organiser is obliged to obtain the signature of all persons who do not have a valid FIS season accreditation to this effect.

211.2 The Organising Committee

The Organising Committee consists of those members (physical or legal) who are delegated by the organiser and by the FIS. It carries the rights, duties and obligations of the organiser.

211.3 Organisers which hold competitions involving competitors not qualified under art. 203 - 204 have violated the International Competition Rules and measures are to be taken against them by the FIS Council.

212 Insurance

212.1 The organiser must take out liability insurance for all members of the Organising Committee. The FIS shall provide its employees and appointed officials, who are not members of the Organising Committee (e.g. equipment controller, medical supervisor, etc.), with liability insurance when they are acting on behalf of the FIS.

212.2 Before the first training day or competition, the organiser must be in possession of a binder or cover notes issued by a recognised insurance company and present it to the Technical Delegate. The Organising Committee requires liability insurance with coverage of at least CHF 1 million; whereby it is recommended that this sum is at least CHF 3 million; this sum can be increased according to decisions of the FIS Council (World Cup etc).
Additionally, the policy must explicitly include liability insurance claims by any accredited participant, including competitors, against any other participant including but not limited to officials, course workers, coaches, etc

212.3 The Organiser respectively its' National Ski Association may request the FIS insurance broker to arrange cover for the competition (at the cost of

the Organiser) if the organiser does not have the necessary insurance cover in place.

212.4 All competitors participating in FIS events must carry accident insurance, in sufficient amounts to cover accident, transport and rescue costs including race risks. The National Associations are responsible for adequate insurance coverage of all their competitors sent and inscribed by them.
The National Ski Association or their competitors must be able to show proof of the respective insurance coverage at any time on request of the FIS, one of its representatives or the organising committee.

213 Programme

A programme must be published by the organisers for each competition listed in the FIS Calendar which must contain the following:

213.1 name, date and place of the competitions, together with information on the competition sites and the best ways of reaching them,

213.2 technical data on the individual competitions and conditions for participation,

213.3 names of principal officials,

213.4 time and place for the first team captains' meeting and the draw,

213.5 timetable for the beginning of the official training and the start times,

213.6 location of the official notice board,

213.7 time and place for the prize-giving,

213.8 final date of entry and address for entries, including telephone, telefax and e-mail address.

214 Announcements

214.1 The Organising Committee must publish an announcement for the event. It must contain the information required by art. 213.

214.2 Organisers are bound by the rules and decisions of the FIS in limiting the number of entries. A further reduction in entries is possible under art. 201.1 provided it is made clear in the announcement.

214.3 Postponements or cancellations of competitions and programme alterations must be communicated immediately by telephone, e-mail or telefax to the FIS, all invited or entered National Ski Associations and the appointed TD. Competitions moved to an earlier date must be approved by the FIS.

215 Entries

215.1 All entries must be sent so that the Organising Committee receives them before the final date of entry. The organisers must have a final and complete list not later than 24 hours before the first draw.

215.2 National Ski Associations are not permitted to enter and draw the same competitors in more than one competition on the same date.

215.3 Only National Ski Associations are entitled to make entries for international competitions. Every entry should include:

215.3.1 code number, name, first name, year of birth, National Ski Association;

215.3.2 an exact definition of the event for which the entry is made.

215.4 Entries for FIS World Championships (see Rules for the Organisation of FIS World Championships).

215.5 The entry of a competitor by the National Ski Association for a race shall constitute a contract solely between the competitor and the organiser and shall be governed by the Athletes Declaration.

216 Team Captains' Meetings

216.1 The time and location of the first team captains' meeting and of the draw must be shown in the programme. The invitations for all other meetings have to be announced to the team captains at their first meeting. Emergency meetings must be announced in good time.

216.2 Representation by a substitute from another nation during discussions at team captains' meetings is not allowed.

216.3 The team captains and trainers must be accredited by the organisers according to quota.

216.4 Team captains and trainers must obey the ICR and the decisions of the Jury and must behave in a proper and sportsmanlike manner.

217 Draw

217.1 Competitors' starting order for each event and each discipline is decided according to a specific formula by draw and/or point order.

217.2 The competitors entered by a National Ski Association will only be drawn if provided written entries have been received by the organiser before the closing date.

217.3 If a competitor is not represented at the draw by a team captain or trainer, he will only be drawn if it is confirmed by telephone, telegram, e-mail or telefax by the beginning of the meeting that the competitors who are entered will participate.

217.4 Competitors who have been drawn and are not present during the competition must be named by the TD in his report, indicating if possible the reasons for absence.

217.5 Representatives of all the nations taking part must be invited to the draw.

217.6 If a competition has to be postponed by at least one day, the draw must be done again.

218 Publication of Results

218.1 The unofficial and official results will be published in accordance with the rules for the specific event.

218.1.1 *Transmission of Results*

For all international competitions, there must be direct communication between the Start and the Finish. In Olympic Winter Games the communications must be assured by fixed wiring.
In the data service area, access to the internet (at least ADSL speed) is required for World Cup, World Championships and Olympic Winter Games competitions.

218.2 The data and timing generated from all FIS competitions is at the disposal of FIS, the organiser, the National Ski Association and participants for use in their own publications, including websites. Use of data and timing on websites is subject to the conditions laid down in the FIS Internet Policies.

218.3 FIS Internet Policies and Exchange of Data relating to the FIS Competitions

218.3.1 *General*

As part of the ongoing promotion of skiing and snowboard, the International Ski Federation encourages and appreciates the efforts made by the National Ski Associations to provide messages and information to their members and fans. An increasingly important medium for this provision of information is through the Internet.

The following policy has been established in order to assist National Ski Associations through the provision of data from FIS competitions, and to clarify certain conditions that relate to the use and presentation of the data from FIS competitions.

218.3.2 *FIS Calendar data*

A specific FIS Calendar programme has been developed for the free use of National Ski Associations and other third parties. An updated Fiscal zip file containing revised calendar information will be available every week from the ftp site: ftp://ftp.fisski.ch for uploading into the FIS Calendar programme.

Thereafter it may be exported into National Ski Association's own software if necessary for planning purposes, etc. This data may not be passed on to third parties or organisation for commercial use.

218.3.3 *Results and Standings*

National Ski Associations can obtain official results, after they have been approved by the FIS Points verification procedure at the FIS Office. This data will be available on request to the FIS IT Manager who will provide the necessary instructions and/or routines on a case-by-case basis. The FIS World Cup results will include a credit to the results service providers. Standings from the various Cup series will also be available after receipt from the results service providers in the case of the FIS World Cup, or they have been input manually for other Cup series.

1. The results and data from FIS competitions may only be used on the National Ski Associations', Organisers' and participants' websites

and may not be passed on for commercial use to third parties or organisations.
The National Ski Association may download the data into its' own software for evaluating performances, etc.

2. National Ski Associations who wish to display results on their website, but do not have a database structure to upload the raw data can create a link to the relevant page of the FIS website. The exact addresses can be obtained from the FIS IT Manager.

3. A link will be established from the FIS Website to all National Ski Associations with their own website, as well as the ski industry and relevant media websites on requests. A reciprocal link to the FIS website should also be created.

218.3.4 *Organisers access to results*

Organisers of FIS World Cup races can obtain official results from their races after they have been approved by the FIS Points verification procedure in the results database. The upload is a computer-automated procedure for World Cup races and takes place immediately after the end of the race.

The pdf file containing the results and standings can be downloaded from www.fis-ski.com and from ftp://ftp.fisski.ch/ followed by the discipline code and the name of the site: AL (Alpine), CC (Cross-Country), JP (Ski Jumping), NK (Nordic Combined); SB (Snowboarding), FS (Freestyle) etc. The individual competition can be identified by the competition codex as published on the detailed page of the calendar on www.fis-ski.com.

219 Prizes

219.1 The detailed rules concerning the awarding of prizes will be published by the FIS. Prizes shall consist of mementos, diplomas, cheques or cash. Prizes for records are forbidden. The FIS Council decides in the autumn on the minimum respectively maximum values of the prize money approximately one and a half years before the competition season. The organisers have to inform the FIS by October 15th of the amount.

219.2 If two or more competitors finish with the same time or receive the same points, they shall be given the same placing. They will be awarded the same prizes, titles or diplomas. The allocation of titles or prizes by drawing lots or by another competition is not allowed.

219.3 All prizes are to be awarded no later than the final day of a competition or event series.

220 Team Officials, Coaches, Service Personnel, Suppliers and Firms' Representatives

In principle these regulations apply to all disciplines, taking into consideration the special rules.

220.1 The Organising Committee of an event must provide the Technical Delegate with a list of persons accredited to the competition.

220.2 It is forbidden for suppliers and for persons in their service to advertise inside the restricted area or to wear clearly visible commercial markings on their clothing or equipment which do not conform with art. 207.

220.3 Team officials accredited service personnel and suppliers receive from the FIS an official FIS accreditation and must perform their specified function. The individual organisers are free to accredit additional company representatives or other important persons.

220.4 Only persons who have the official FIS accreditation or a special accreditation from the organiser for course or jumping-hill have access to the courses and jumping-hills (according to special rules of the discipline).

220.5 The Different Types of Accreditation

220.5.1 Technical Delegates, the Jury, and the persons mentioned in art. 220 with clearly visible accreditation have access to the courses and jumping-hills.

220.5.2 Servicemen attached to teams are permitted entry to start area and service area at the finish. They are not allowed entry to the courses or jumping-hills.

220.5.3 Company representatives accredited at the discretion of the organisers who do not have FIS accreditation are not permitted entry to the courses and restricted service areas.

221 Medical Services, Examinations and Doping

221.1 National Ski Associations are responsible for the fitness of their competitors to race. All competitors, male and female are required to undergo a thorough evaluation of their medical health. This evaluation is to be conducted within the competitor's own nation.

221.2 If requested by the FIS Medical Committee or its representative, competitors must undergo a medical examination before or after the competition.

221.3 Doping is forbidden. Any offence under these FIS Anti Doping Rules will be punished under the provisions of the FIS Anti-Doping Rules.

221.4 Doping controls may be carried out at any FIS competition (as well as out-of competition). Rules and procedures are published in the FIS Anti-Doping Rules and FIS Procedural Guidelines.

221.5 Gender of the Competitor

If any question or protest arises as to the gender of the competitor, FIS shall assume responsibility for taking the necessary steps to determine the gender of the competitor.

221.6 Medical Services Required from Event Organisers

The health and safety of all those involved in a FIS competition is a primary concern of all event Organisers. This includes the competitors as well as volunteers, course workers and spectators.

The specific composition of the medical support system is dependent on several variables:

- The size, level, type of the event being held (World Championships, World Cup, Continental Cup, FIS-level, etc.) together with the local medical standards of care and geographic locations and circumstances.
- The estimated number of competitors, support staff and spectators
- The scope of responsibility for the Event Medical Organisation (competitors, support staff, spectators) should also be determined.

The Organiser / The Chief of Medical and Rescue Services must confirm with the race director or technical delegate that the required rescue facilities are in place before starting the official training or competition. In the event of an incident, or issue that prevents the primary medical plan from being utilized, the back up plan must be in place before recommencing the official training or competition.
The specific requirements concerning facilities, resources, personnel and team physicians are contained in the respective discipline rules and the FIS Medical Guide.

222 Competition Equipment

222.1 A competitor may only take part in a FIS competition with equipment which conforms to the FIS Regulations. A competitor is responsible for the equipment that he uses (skis, snowboard, bindings, ski boots, suit, etc). It is his duty to check that the equipment he uses conforms to the FIS specifications and general safety requirements and is in working order.

222.2 The term competition equipment encompasses all items of equipment which the competitor uses in competitions. This includes clothing as well as apparatus with technical functions. The entire competition equipment forms a functional unit.

222.3 All new developments in the field of competition equipment must be approved in principle by the FIS.
The FIS does not take any responsibility for the approval of new technical developments, which at the time of introduction may contain unknown risk to the health or cause an increase in the risk of accidents.

222.4 New developments must be submitted by May 1st, at the latest, for the following season. The first year new developments can only be approved provisionally for the following season and must be finally confirmed prior to the subsequent competition season.

222.5 The Committee for Competition Equipment publishes equipment by-laws after approval by the FIS Council (definitions or descriptions of the equipment items which are allowed).
In principle unnatural or artificial aids which modify the performance of the competitors and/or constitute a technical correction of the individual's physical predisposition to a defective performance, as well as competition equipment which impact the health of the competitors or increase the risk of accidents are to be excluded.

222.6 Controls

Before and during the competition season or on submission of protests to the Technical Delegate at the competition concerned, various controls can be carried out by members of the Committee for Competition Equipment or official FIS Equipment Controllers. Should there be a well-founded

suspicion that regulations were violated, the equipment items must be confiscated immediately by the controllers or Technical Delegates in the presence of witnesses and be forwarded sealed to the FIS, which will submit the items to a final control by an officially recognised institution. In cases of protest against items of the competition equipment, the losing party will bear the investigation costs.
No testing of equipment or material in independent laboratories may be requested at races where a FIS Technical Expert has performed the controls, unless it can be demonstrated that the controls have not been carried out according to the rules.

222.6.1 At all FIS events where official FIS measurement experts using the official FIS measurement tools are appointed, the result of measurements carried out at the time are valid and final, irrespective of previous measurements.

223 Sanctions

223.1 General Conditions

223.1.1 An offence for which a sanction may apply and a penalty be imposed is defined as conduct that:
-is in violation or non-observance of competition rules, or
-constitutes non-compliance with directives of the jury or individual members of the jury in accordance with 224.2 or
-constitutes unsportsmanlike behaviour

223.1.2 The following conduct shall also be considered an offence:
-attempting to commit an offence
-causing or facilitating others to commit an offence
-counselling others to commit an offence

223.1.3 In determining whether conduct constitutes an offence consideration should be given to:
-whether the conduct was intentional or unintentional,
-whether the conduct arose from circumstances of an emergency

223.1.4 All FIS affiliated associations, including their members registered for accreditation, shall accept and acknowledge these rules and sanctions imposed, subject only to the right to appeal pursuant to the FIS Statutes and ICR

223.2 Applicability

223.2.1 Persons
These sanctions apply to:
-all persons who are registered with or accredited by the FIS or the organiser of an event published in the FIS calendar (an event) both within and out with the confines of the competition area and any location connected with the competition, and
-all persons who are not accredited, within the confines of the competition area

223.3 Penalties

223.3.1 The commission of an offence may subject a person to the following penalties:

- Reprimand - written or verbal
- Withdrawal of accreditation
- Denial of accreditation
- Monetary fine not more than CHF 100’000.--
- A time penalty

223.3.1.1 FIS-affiliated associations are liable to the FIS for the payment of any fines and incurred administrative expenses imposed on persons whose registration or accreditation they arranged.

223.3.1.2 Persons not subject 223.3.1.1 also are liable to the FIS for fines and incurred administrative expenses. If such persons do not pay these fines, they shall be subject to a withdrawal of any permission to apply for accreditation to FIS events for a period of one year.

223.3.1.3 Payment of fines is due within 8 (eight) days following their imposition.

223.3.2 All competing competitors may be subject to the following additional penalties:

- Disqualification
- Impairment of their starting position
- Forfeiture of prizes and benefits in favour of the organiser
- Suspension from FIS events

223.3.3 A competitor shall only be disqualified if his mistake would result in an advantage for him with regard to the end result, unless the Rules state otherwise in an individual case.

223.4 A jury may impose the penalties provided in 223.3.1 and 223.3.2, however they may not impose a monetary fine of more than CHF 5'000.-- or suspend a competitor beyond the FIS event at which the offence occurred.

223.5 The following Penalty decisions may be given verbally:

- reprimands
- the withdrawal of accreditation for the current event from persons who had not been registered with the organiser through their National Associations
- the withdrawal of the accreditation for the current event from FIS-accredited persons
- the denial of accreditation to the current event from persons who are within the confines of the competition area or any other location connected with the competition.

223.6 The following Penalty decisions shall be in writing:

- monetary fines
- disqualification
- impaired starting position
- competition suspensions
- withdrawal of accreditation from persons who had been registered through their National Association
- withdrawal of accreditation of FIS accredited persons

223.7 Written Penalty decisions must be sent to the offender (if it is not a competitor), the offender's National Association and the Secretary General of FIS.

223.8 Any disqualification shall be recorded in the Referee's and/or the TD`s Report.

223.9 All penalties shall be recorded in the TD's Report.

224 Procedural Guidelines

224.1 Competence of Jury

The Jury at the event has the right to impose sanctions according to the above rules by majority vote. In the case of a tie, the chairman of the Jury has the deciding vote.

224.2 Within the location, especially during the training and the competition period, each voting Jury member is authorised to issue oral reprimands and withdraw the accreditation which is issued for the current event.

224.3 Collective Offences

If several persons commit the same offence at the same time and under the same circumstances, the Jury's decision as to one offender may be considered binding upon all offenders. The written decision shall include the names of all offenders concerned, and the scope of the penalty to be assessed upon each of them. The decision will be delivered to each offender.

224.4 Limitation

A person shall not be sanctioned if proceedings to invoke such sanction have not been commenced against that person within 72 hours following the offence.

224.5 Each person who is a witness to an alleged offence is required to testify at any hearing called by the Jury, and the Jury is required to consider all relevant evidence.

224.6 The Jury may confiscate objects that are suspected of being used in violation of equipment guidelines.

224.7 Prior to the imposition of a penalty (except in cases of reprimands and withdrawal of accreditation according to 223.5 and 224.2), the person accused of an offence shall be given the opportunity to present a defence at a hearing, orally or in writing.

224.8 All Jury decisions shall be recorded in writing and shall include:

224.8.1 The offence alleged to have been committed

224.8.2 The evidence of the offence

224.8.3 The rule (s) or Jury directives that have been violated

224.8.4 The penalty imposed.

224.9 The penalty shall be appropriate to the offence. The scope of any penalty imposed by the Jury must consider any mitigating and aggravating circumstances.

224.10 Remedies

224.10.1 Except as provided for in 224.11, a penalty decision of the Jury may be appealed in accordance with the provisions in the ICR.

224.10.2 If an appeal is not filed within the deadline established in the ICR, the penalty decision of the Jury becomes final.

224.11 The following decisions of the Jury are not subject to appeal:

224.11.1 Oral penalties imposed under 223.5 and 224.2

224.11.2 Monetary fines less than CHF 1'000.-- (One Thousand Swiss Francs) for single offence and a further CHF 2'500.-- for repeated offences by the same person.

224.12 In all remaining cases, appeals are to be directed to the Appeals Commission, as per the ICR.

224.13 The Jury shall have the right to submit to the Appeals Commission recommendations for penalties in excess of monetary fines of CHF 5'000.- and suspensions beyond the event in which the offence occurred (223.4).

224.14 FIS Council shall have the right to submit to the Appeals Commission comments with respect to any written penalty decisions by the Jury.

224.15 Costs of Proceedings

Fees and cash expenses, including travel expenses (costs of the proceedings) are to be calculated comparable to costs paid to TD's and are to be paid by the offender. In the case of a reversal of Jury decisions, in whole or in part, the FIS covers all costs.

224.16 Enforcement of Monetary Fines

224.16.1 The FIS oversees the enforcement of monetary fines and the costs of proceedings. Enforcement costs are considered costs of the proceedings.

224.16.2 Any outstanding monetary fines imposed on an offender is considered a debt of the National Association to which the offender is a member.

224.17 Benefit Fund

All monetary fines are paid into the FIS Youth Promotion Fund.

224.18 These rules are not applicable to any violation of FIS Doping rules.

225 Appeals Commission

225.1 Appointments

225.1.1 The FIS Council shall appoint from the Discipline Sub-committee for Rules (or Discipline Committee if there is no Rules Sub-Committee) a Chairman and a Vice Chairman of the Appeals Commission. The Vice Chairman

shall preside when the Chairman is either unavailable or is disqualified for bias and prejudice.

225.1.2 The Chairman shall appoint 3 members, which may include himself, to the Appeals Commission from the Discipline Rules Sub-Committee or Discipline Committee for each case appealed or submitted to be heard, whose decisions shall be by majority vote.

225.1.3 To avoid either actual bias and prejudice or the appearance of bias and prejudice, members appointed to an Appeals Commission shall not be members of the same National Association as the offender whose case is under appeal. In addition, members appointed to an Appeals Commission must report voluntarily to the Chairman any bias and prejudice they may hold for or against the offender. Persons who are biased and prejudiced shall be disqualified from serving on the Appeals Commission by the Chairman or, in the event the Chairman is disqualified, by the Vice Chairman.

225.2 Responsibility

225.2.1 The Appeals Commission shall only hold hearings with respect to appeals by offenders or by the FIS Council from decisions of competition juries, or matters referred to it by competition juries recommending penalties in excess of those provided for in the Sanction rules.

225.3 Procedures

225.3.1 The Appeal must be decided within 72 hours of receipt of the Appeal by the Chairman, unless all parties involved in the Appeal agree in writing to an extension of time for the hearing.

225.3.2 All appeals and responses must be submitted in writing, including any evidence the parties intend to offer in support of or in response to the Appeal.

225.3.3 The Appeals Commission shall decide on the location and format for the Appeal (phone conference, in person, e-mail exchanges).
The Appeals Commission members are required to respect the confidentiality of the appeal until the decision is made public and to consult only with the other members of the panel during the deliberations.
The Chairman of the Appeals Commission may request additional evidence from any of the parties involved, providing this does not require disproportionate means.

225.3.4 The Appeals Commission shall allocate costs of the appeal pursuant to 224.15.

225.3.5 Decisions of the Appeals Commission may be announced orally at the conclusion of the deliberations or hearing should one take place. The decision, together with its reasoning, shall be submitted in writing to the FIS, which shall deliver them to the parties involved, their National Associations and all members of the Jury whose decision was appealed. In addition, the written decision shall be available at the FIS Office.

225.4 Further Appeals

225.4.1 Decisions of the Appeals Commission may be appealed to the FIS Court in accordance with Article 52; 52.1 and 52.2 of the Statutes.

225.4.2 Appeals to the FIS Court shall be in writing and submitted to the FIS Secretary-General in accordance with the time limits prescribed in Article 52; 52.1 and 52.2 of the Statutes from the date of the publication of the Appeals Commission decision.

225.4.3 An Appeal to the Appeals Commission or to the FIS Court will not delay the implementation of any penalty decision of the Competition Jury, Appeals Commission or Council.

226 Violation of Sanctions

Where there is a violation of a sanction that has been imposed (according to ICR 223 or the FIS Anti-Doping Rules, the Council may impose such further and other sanctions that it considers appropriate.
In such cases, some or all of the following sanctions may apply:

226.1 Sanctions against individuals involved:

- a written reprimand;

and/or

- a monetary fine not to exceed the sum of CHF 100'000.--

and/or

- competition suspension at the next level of sanction - for example if a three month suspension for a doping offence was imposed, a violation of the suspension will cause a two year suspension; if a two year suspension for a doping offence was imposed, a violation of the suspension will cause a lifetime suspension;

and/or

- withdrawal of accreditation from individuals involved.

226.2 Sanctions against a National Ski Association:

- withdrawal of FIS funding to the National Ski Association;

and/or

- cancellation of future FIS events in the country involved;

and/or

- withdrawal of some or all FIS membership rights, including participation in all FIS calendar competitions, voting rights at the FIS Congress, membership of FIS Committees.

Rules Common to Snowboard Competitions

For the technical organisation of the Olympic Winter Games and FIS World Championships (Snowboard events) the rules of the Snowboard FIS World Cup shall be valid, where not otherwise specified in the ICR.

2000 Organisation

Reference is made to Article 211.

2001 Organising Committee and the Jury

2001.1 Composition

The Organising Committee consists of those members (physical or legal) who are delegated by the organiser and by the International Ski Federation. It carries the rights, duties and obligations of the organiser.

2001.2 Appointments by the International Ski Federation

The International Ski Federation appoints the Technical Delegate and Head-Judge (HP, SBS and BA) for all competitions and:

2001.2.1 In World Cup Races:

– the Referee (Race Director) and
– the Head-Judge and Judges (5-6) for HP, SBS and BA

2001.2.2 In Continental Cup Races:

– the Head-Judge and Judges (5) for HP, SBS and BA

2001.2.3 For the Olympic Winter Games, FIS Snowboard World Championships and FIS Snowboard Juniors World Championships:

– all Jury members and Judges

2001.2.4 In all other races the Technical Delegate appoints:

– the Referee

2001.3 Appointments by the organiser

The organiser appoints all other members of the Organising Committee (except TD and Judges). The chairman or his representative represents the committee in public, leads the meetings and makes decisions concerning all matters that are not made by other persons or groups. Before, during and after competition he works closely with the International Ski Federation and their appointed officials. He takes on all other duties that are necessary for carrying out the competition. The following officials must be appointed.

2001.3.1 The Chief of Competition

The Chief of Competition supervises the work of all course officials, summons the meetings of the competition committee for consideration of technical questions and generally acts as chairman of the team captains' meetings after consultation with the Technical Delegate.

2001.3.2 *The Chief of Course*

The chief of course is responsible for the preparation of the courses in accordance with the directives and decisions of the Jury. He must be familiar with local snow conditions on the terrain concerned.

2001.3.3 *The Start Referee*

The start referee must remain at the start from the beginning of the official inspection time until the end of training and/or competition He is responsible for the organisation and supervision of the start and observance of all regulation i.e.

- He makes sure that the regulations for the start and the start organisation are properly observed.
- He determines late and false starts.
- He must be able to communicate immediately with the Jury at all times.
- He reports the names of all competitors who did not start, have made a false or late start and informs the Jury of all rule infringements.

2001.3.4 *The Finish Referee*

The finish referee must remain at the finish from the beginning of the official inspection time until the end of training and / or competition. He is responsible for the organisation and supervision of the finish and observance of all regulations i.e.

He makes sure that the regulations for the organisation of the finish and the finish in-run and out-run are properly observed.

- He supervises the finish controller, the timing and the crowd control in the finish area.
- He must be able to communicate immediately with the Jury at all times.
- He reports the names of all competitors who do not finish and informs the Jury of all rule infringements.

2001.3.5 *Chief of Finish (Snowboard Cross only)*

The Chief of Finish is responsible for the organisation and supervision of the finish area (see also 2003.3.4) and the finish line Judges. The Chief of Finish will accept protests in the finish area. The Chief of Finish must report all protests immediately to the other jury members.

2001.3.6 *Chief of Pipe/Slopestyle*

The Chief of Pipe/Slopestyle is responsible for the construction and preparation in accordance with the FIS Halfpipe/Slopestyle specifications of the Halfpipe site before and during the competition. He must be familiar with the local snow conditions and preferably be from the host resort.

In addition, the Chief of Pipe/Slopestyle:

–Should be a member of the Organising Committee

–Is under the direction of the Jury and the FIS Race Director

- Must assure that the Halfpipe/Slopestyle course at all times during training and competition conforms with FIS Halfpipe/Slopestyle recommendations and specifications

–Oversees the building and construction of the Judges podium

- Provides for adequate accommodations (i.e. tables, chairs, partitions, heaters etc.) to fulfil the needed requirements on the Judges podium
- Supervise Halfpipe/Slopestyle training in the absence of the Head Judge and/or the TD

–Must attend all Halfpipe/Slopestyle Team Captains meetings

- Provide for sufficient food and refreshments etc. for the Judges as requested by the Head Judge.
- Must have experience in building and maintaining Halfpipe/Slopestyle courses. FIS has the possibility to request the presence of a technical adviser appointed by FIS for the preparation and maintenance of the Halfpipe/Slopestyle courses.

2001.3.7 *The Chief of Timing and Calculations*

The chief of timing and calculations is responsible for the coordination of officials at the start and finish, including timing, calculations and Judges scores. In alpine events, he or a special assistant along with the Jury will decide the interval between starts. The following officials are under his direction:

- Starter
- Assistant Starter
- Start Recorder
- Chief Timekeeper
- Assistant Timekeepers
- Finish Controller
- Chief of Calculations and his Assistants

2001.3.8 *The Chief Gate Judge*

The chief gate judge organises and supervises the work of the gate Judges. He designates the gates each will supervise and places them in position. At the end of the 1st run and the end of the competition he will collect the gate Judges control cards for delivery to the referee. He must distribute, in good time, to each gate judge the material that they need (control card, pencil, start list, etc.) and be prepared to offer assistance either to help keep the spectators off the course or to help maintain the course, etc. He must make sure that the numbering and the marking of the gates is done within the required time.

2001.3.9 *The Gate Judges*

A gate judge will be responsible for the supervision of one or more gates. A gate judge must observe accurately whether the passage of the competitor was correct through his area of observation. He must also fulfil a number of other important functions, all of which are described in detail under article 2071.

2001.3.10 *The Race Secretary*

The race secretary is responsible for all secretarial work for the technical aspects of the competition and amongst others for the preparation of the draw. They must ensure that the official results contain the information required by art. 2027.3. They are responsible for the minutes of the competition committee, Jury and team captains' meetings. They must ensure that all forms for start, finish, timing, calculations, and gate judging are well prepared, and handed over to the officials concerned in good order at the proper time. They can receive official protests and gives them to those who are concerned. They must facilitate the calculation of results by appropriate preparation and ensure that they are duplicated and published as quickly as possible after the completion of the competition.

2001.3.11 *The Chief Steward*

The chief steward is responsible for extensive safety precautions to ensure that spectators are kept off all parts of the course. Sufficient personnel must be used according to an exact plan. At places where large numbers of spectators are expected, ropes or fences should be erected in advance. Attention should be paid that there is sufficient space behind the barriers to permit circulation of spectators.

2001.3.12 *The Chief of Medical and Rescue Services*

The chief of medical and rescue services is responsible for organising adequate first aid and medical coverage during the official training periods and the actual competition. They must be sure that telephone or radio communication is available over the entire length of the course and must coordinate plans with the chief of competition before the start of official training.

They must arrange for quarters to which injured competitors may be taken and treated.

The competition doctor must meet with the team doctors before the start of official training to co-ordinate plans.

During the competitions they must be in telephone or radio communication with his assistants.

A doctor, who must be a good skier or snowboarder, should be ready at the start to deal with any eventuality and has to stay in contact with the Jury and the members of the rescue service. This task can be delegated to a team doctor. Details of the Medical Support Requirements are given in Chapter 1 of the FIS Medical Guide (containing Medical Rules and Guidelines).

2001.3.12.1 First Aid and Medical Service

The first aid and medical services must be completely operational during all training times. Details of the Medical Support Requirements are given in Chapter 1 of the FIS Medical Guide containing Medical Rules and Guidelines.

2001.3.13 *The Chief of Course Equipment and Technical Equipment*

The chief of course equipment is responsible for the provision of all equipment and tools for the preparation and maintenance of the courses, for the conduct of the competition, and for the diffusion of information, when these duties have not specifically been assigned to another official.

2001.3.14 *The Chief of press*

The chief of press is responsible for all briefing and information for journalists, photographers, television and radio reporters, in accordance with the instructions of the Organising Committee.

2001.3.15 *The Chief of Communications and sound*

The Chief of Communications is responsible to arrange and coordinate all communications and announcements including radios, sound equipment, choice of music and briefing of announcers.

2001.3.16 *Other Officials within the Organising Committee – the following officials are recommended (with written job descriptions)*

– Chief of Finance (treasurer)
– Chief of Accommodation and Meals
– Chief of Protocol

The organiser is authorised to include other officials within the Organising Committee.

2002 Hosting Duties of the Organising Committee

2002.1 The Organising Committee is responsible to provide all relevant information and materials to the parties concerned (see art. 212, 213, 214). Information about accommodation and travel details should be circulated at least two (2) months prior to the competition.

2003 Basic Costs of the Organising Committee

2003.1 The Organising Committee must pay the sanction fees of the competition according to the regulations in the FIS Calendar.

2003.2 The Organising Committee must compensate the Judges according to the current policy of the FIS.

2003.3 The Organising Committee must compensate the FIS Technical Delegate according to the current policy of the FIS.

2003.4 The Organising Committee must provide accommodation in accordance with the current policies of the FIS.

2003.5 The Organising Committee must provide lift tickets for training and compe tition in accordance with the current policies of the FIS. The maximum amount for lift tickets in FIS races is Euro 20 (for competitions in SUI CHF 30) per day according to the currency of the hosting nation (Snowboard competition on level 3 and 4). For COC competitions (Snowboard competition on level 2) see Rules for the Snowboard Continental Cups.

2004 The Jury

2004.1 The following members of the Jury, who are members of the organising committee, are responsible for technical matters within the closed competition areas (exception see WC- and CoC-rules):

2004.1.1 *Alpine events (PGS, PSL, SL, GS,*

– the Technical Delegate
– the Referee
– the Chief of Competition

2004.1.2 *Snowboard Cross*

– the Technical Delegate
– the Chief of Finish
– the Chief of Competition

2004.1.3 *Halfpipe, Slopestyle, Big Air and other judged events*

– the Technical Delegate
– the Head Judge
– the Chief of Competition or Chief of Pipe/Slopestyle

2004.1.4 *For Olympic Winter Games and FIS Snowboard World Championships in all events additional Jury members*

- Start Referee
- Finish Referee

For all Jury decisions the FIS professionals (FIS Race Director) may act as an advisor (see also WC and CoC-rules).

2004.2 Appointment of the Jury for Olympic Winter Games and FIS Snowboard World Championships

2004.2.1 *The FIS Council appoints:*

– the Technical Delegate
– the Referee
– the Head Judge
– the Judges
– the Start Referee
– the Finish Referee
– the Video Controller

2004.2.2 The TD-Working Group Snowboard proposes qualified TD´s as Jury members to the Snowboard Committee, who in turn submit the names to the FIS Council for approval.
In order to qualify, a proposed member must hold a valid licence as a Technical Delegate of the FIS.

2004.2.2.1 The Judges Working Group Snowboard proposes qualified Head Judges and Judges to the Snowboard Committee, who in turn submits the names to the FIS Council for approval
In order to qualify, a proposed Head Judge or Judge must hold a valid FIS licence and meet all other qualification requirements of the FIS.

2004.2.3 The organising National Ski Association submits its proposal for the Chief of competition in the Organising Committee to the Council for approval.

2004.2.4 All members of the Jury must be able to understand each other in one and the same FIS language.

2004.2.5 Persons, who work for a National Ski Association with responsibility for a snowboard team, may not be members of the Jury.

2004.2.6 For Olympic Winter Games and FIS Snowboard World Championships a visiting nation can be represented on the Jury by only one FIS Council approved member (including the TD).

2004.3 Appointment of the Jury for International Competitions (see also WC and COC rules)

2004.3.1 FIS appoints the Technical Delegate and Judges incl. Head-Judge.

2004.3.2 The TD appoints
– the Referee
– Substitute Jury members in case of force majeure.

2004.3.3 For international ladies competitions, the Jury should include a lady.

2004.3.4 The Chief of Competition and Chief of Finish in Snowboard Cross have to belong to the organising National Ski Association.

2004.3.5 A competitor cannot be a member of the Jury.

2004.4 Tenure of the Jury

2004.41 The appointed Jury members gather for their first meeting prior to the first Team Captains meeting.

2004.42 The active duty of the Jury begins with its first meeting and ends, if no protest is submitted, at the expiration of the protest deadline, otherwise after dealing with all submitted protests.

2004.5 Voting and Franchise (see also FIS WC and CoC rules)

2004.5.1 The TD is chairman of the Jury. He conducts the meetings.

2004.5.2 Each of the following has one vote in the Jury
– the TD for all competitions
– the chief of competition for all competitions
– the chief of finish for Snowboard Cross events
– the Head Judge for the Half pipe, Slopestyle and Big Air events
– the Referee for all Alpine events
– FIS Race Director for Snowboard Cross events

2004.5.2.1 For Olympic Winter Games and FIS World Championships
- all Jury members

2004.5.3 Decisions are made by simple majority vote of members present and voting (exception art. 2056.3).
In the case of a tie, the TD has the casting vote (also see FIS World Cup Rules).

2004.5.4 Minutes are to be kept of all meetings and decisions of the Jury and signed by each individual member of the Jury, with each individual vote on decisions recorded, as per art. 2001.3.10

2004.5.5 The minutes must be written in at least one of the FIS languages (English, French or German).

2004.5.6 In cases where an immediate decision must be made and it is not possible to convene the entire Jury, each member of the Jury has the right, prior to or during the competition, to make decisions which according to the rules per se are reserved to the Jury as a whole; but only provisionally with the obligation to have the decision confirmed by the Jury as soon as possible.

2004.6 Duties of the Jury

2004.6.1 The Jury monitors the adherence to the rules throughout the entire competition, including the official training.

2004.6.2 From a technical standpoint particularly by:

- Checking the competition-course and the set courses as well as official warm-up areas
- Checking the snow conditions on and beside the course
- Checking the preparation of the course
- Approving the use of snow compacters and other chemicals.
- Checking the crowd control systems
- Checking the start, the finish area and the run-out from the finish
- Checking the first aid service
- Appointing the course setters
- Fixing the time of course setting
- Overseeing the work of the course setters and Snowboard Cross builder/designer
- Checking the fastening of the gate flags
- Opening or closing the competition courses for training in consideration of the technical preparations and the prevailing weather conditions
- Determining the manner of the course inspection
- Inspection of the course before the competition
- Determining the number of forerunners for each run and setting the start order of the forerunners
- Debriefing the forerunners
- Changing the start order in consideration of course conditions and in extraordinary conditions
- Changing the start intervals
- Giving instructions to and obtaining information from the gate Judges.
- Checking the Judges stands and the Judges working conditions.

2004.6.3 From an organisational viewpoint particularly by:

- Ranking of the competitors for the draw
- Division of the competitors without points into groups according to some determined basis
- Granting of provisional runs and re-runs
- Cancellation or suspension of the competition: (beforehand)
- if there is too little snow cover on or beside the course, or the snow surface on the course is badly or unevenly prepared
- if areas are deemed to be insufficiently protected
- if the first aid and medical service are inadequate or at all lacking
- if the crowd control is insufficient

– Shortening the course, if snow or weather conditions make this appear necessary
– Interruption of the competition if the prerequisites of art. 2033 are present,
– Termination of the competition if the prerequisites of art. 2034 are present.

2004.6.4 From a disciplinary viewpoint particularly by:

– Decision on a proposal of the Technical Delegate to exclude a competitor for lack of physical and technical ability
– Enforcement of the checks on regulations concerning advertising on equipment and clothing in the competition area
– limitation of quotas for officials, technicians and medical personnel for admission to the competition-course
– Pronouncement of disqualifications
– Decisions on infractions by team captains, trainers, course setters, service personnel and company representatives, if they are accredited to the competition
– Pronouncement on disciplinary measures and sanctions
– Imposition of sanctions
– Decisions on protests
– Issue of particular directives throughout the entire competition

2004.7 Questions not Covered by Rule

In general, the Jury takes decisions on all questions not clarified by the ICR.

2004.8 Radios

At all competitions entered in the International FIS Calendar, the Jury members must be equipped with radios. These must function on a single reserved frequency and be free of interference. In Snowboard Cross and Slopestyle, the course Judges and if utilized connection coaches, must be equipped with radios.

2004.9 Duties and rights of the Referee

For international races, when possible and deemed appropriate, the referee should be of another nationality than the TD and Chief of Competition.

2004.9.1 Duties and Rights of the Referee

– Drawing of the start numbers
– Inspection of the course immediately after it is set, alone or accompanied by members of the Jury and / or any invited parties.
– Changing the course by taking out or adding gates; if the referee alone inspects the course, his decision is final.
– The course setter and all Jury members must be informed of such changes, if due to circumstances they were not present at this inspection.
– Receiving the reports of the start and finish referees and the competition officials about the infractions of the rules and the gate faults at the end of the first run, and again at the end of the competition.
– Checking, signing and posting the referees minutes immediately after

each run, on the official notice board and also at the finish hut, a list with the names of the competitors disqualified, the gate numbers were the faults occurred, the names of the gate Judges who noted the faults leading to the disqualifications and the exact time the disqualifications were posted.
- Sending a report to the FIS in special cases or in the event of a difference of opinion among the Jury members or in the case of severe injury at a competitor.

2004.9.2 *Collaboration with the TD*

The referee and the assistant referee must work very closely with the TD.

2004.10 Technical Advisor

To support the Jury, FIS can appoint a Technical Advisor for all categories of competitions.
The Technical Advisor has the right to express his opinion within the Jury – without the right to vote.

2004.11 The FIS can impose sanctions against a Jury or individual Jury members.

2005 The Technical Delegate (TD)

2005.1 Definition

2005.1.1 *The primary duties of the TD*

- to make sure that the rules and directions of the FIS are adhered to
- to see that the competition runs in a fair manner
- to advise the organisers within the scope of their duties
- to be the official representative or the FIS

2005.1.2 *Responsibility*

The TD structure comes under the responsibility of the Snowboard Committee. The TD working group for Snowboard Technical Delegates exercises this authority.

2005.1.3 Prerequisites

The TD must hold a valid TD licence (exception see art. 2005.3).

2005.1.4 Development

2005.1.4.1 The development for a TD is:

- Applicant
- Attend TD Clinic / Update Seminar
- Candidate (Supervision and monitoring of on hill activities and understanding of all snowboard competition elements and rules.
- Practical TD on hill examination
- Written examination
- TD-Proposed to FIS Snowboard TD Working Group

2005.1.4.2 Each National Association may nominate capable persons for the position of a Technical Delegate (Applicant). The Technical Delegate Working Group for Snowboard has the final decision as to the acceptance of Appli-

cant's or Technical Delegate Candidates as well as proposed Technical Delegates.

2005.1.5 *Training*

2005.1.5.1 The training of the Applicant is the responsibility of each National Association.

2005.1.5.2 The Candidates must pass various on hill activities as well as a written examination, as drafted by FIS, before being proposed as a potential Technical Delegate. Examinations will take place in an official FIS language. Candidates must within two consecutive years, successfully carried out three practical assignments at different international competitions encompassing all Alpine and Freestyle elements (different supervising competition TD's are recommended). The third practical assignment counts as the Candidates practical examination and is supervised by an officially delegated examining TD.
Candidates must attend the FIS sponsored update courses held by national associations.

2005.1.5.3 At any competition only one TD candidate may undertake an examination. Exceptions can be authorised by the FIS Snowboard Technical Delegate Working Group.

2005.1.5.4 TD Candidate assignments are coordinated by the various national responsible official for TD matters. The FIS Office maintains control of the Candidate performance and examination reports.

2005.1.5.5 TD Candidates have no right to reimbursement of costs while undertaking their assignments and examination.

2005.1.5.6 The TD Candidates examination assignments are under the control and judgement of the officially assigned TD of the competition concerned. The official report by the assigned examining TD must be submit to the FIS and the Candidates national responsible official for TD matters on the applicable FIS form(s). The examining TD must send his report in duplicate to the FIS Office, which, if not already indicated as having been done so, sends a copy to the TD candidate's national responsible official.

2005.1.5.7 The TD Candidate must write their own report(s) on the competition in question. The report must be submitted to the FIS Office and to the TD responsible official of his nation.

2005.1.5.8 The TD is responsible for training and any examination of the candidate assigned to him.

2005.1.5.9 After completion of the practical examination and confirmation of acceptance by the Working Group of Technical Delegates, the TD Candidates will receive their personal and numbered TD licence.

2005.1.6 *Licence*
The licence is a numbered identification document valid for 12 months. It must be renewed each year and is obligatory for every FIS TD.

2005.1.7 *Further Training and Expiration of the Licence*

Every licenced TD must take part annually in a FIS organised update program. A TD who without good reasons misses the update for two consecutive years and / or fails to undertake an assigned TD assignment will be subject to loss of their, TD licence. In order to be able to regain a TD licence, a person must repeat and complete the present TD candidate examination requirement.

2005.2 Assignment

2005.2.1 For Olympic Winter Games, FIS Snowboard World Championships and FIS Junior World Snowboard Championships the appointment is made by the FIS Council on recommendation of the Snowboard Committee.

2005.2.2 For all other international competitions assignments are made by FIS Snowboard Technical Delegate Working

2005.2.3 A Technical Delegate cannot be a member of the organising association. In exceptional cases or exception geographic areas the FIS can appoint a Technical Delegate from the same country. He may not be a member of the organising club or of the regional association.

2005.3 Technical Delegate Replacement

2005.3.1 If the TD for Olympic Winter Games, FIS Snowboard World Championships or FIS Junior World Snowboard Championships is unable to serve, the FIS Council as well as the National Ski Association to which the TD belongs are to be notified. The FIS Council will immediately undertake the appointment of another TD.

2005.3.2 For all other competitions the National Ski Associations responsible TD party, to which the TD belongs, is responsible for the immediate appointment of a replacement. The Organising Committee in question and the FIS are to be immediately informed.

2005.3.3 If for unforeseen reasons, a TD for the Olympic Winter Games, FIS Snowboard World Championships or FIS Junior World Snowboard Championships does not arrive or arrives too late at the competition and thereby is partly or completely unable to fulfil their function at the competition, a deputy is to be named by the FIS Council from amongst the members of the Jury present at the competition site.

2005.3.4 At all other international competitions, a deputy for the absent TD is to be named on the spot by the Jury. The replacement must likewise meet the requirements of art. 2005.1.3.

In an emergency, a TD may also be named who does not meet these requirements, but is competent to ensure the conduct (continuation) of the competition. In the choice of this person stringent criteria are to be used.

2005.3.5 The replacement TD has the same rights and duties as the originally assigned and appointed.

2005.4 Organisation of the Assignment

2005.4.1 The organiser must establish contact with the TD in good time.

2005.4.2 Cancellations or postponements of competitions must be announced to the TD and to the FIS Office immediately, taking into account any applicable deadlines.

2005.4.3 For all international competitions, the TD must arrive at the competition site at least 24 hours before the competition or the start of official training.

2005.5 Duties of the TD for all Competitions

2005.5.1 Before the competition

The TD

- Reviews where applicable the homologation file and consults with the organiser about the possible existence of a special authorisation.
- If he establishes that no homologation exists, the Jury must cancel the competition.
- Reads the TD reports about previous competitions at the site and checks whether the improvements proposed in these reports have been carried out.
- Requests and inspects the liability insurance certificate as required by art 212 and reports to the FIS where necessary.
- Inspects the competition and training courses.
- Supervises the official training. He also controls the fastening of the gate flags
- Collaborates in the administrative and technical preparations.
- Checks the official entry lists, including FIS points
- Checks the validity of the competitors FIS licence and the age-limit
- Checks on the presence of sufficient radios for all members of the Jury.
- Checks the accreditation and the authorisation for entry to the slope.
- Checks over the competition courses with regard to preparation, marking, crowd control, as well as the layout of start and finish areas.
- Supervises the course setting together with the Jury.
- Supervises the course building in Snowboard Cross, Slopestyle and Big Air competitions together with the competition Jury.
- Checks the location of the television towers and sees they are adequately protected.
- Supervises the locations of the first aid service along the course as well as the organisation of the medical care.
- Checks on all technical installations such as timekeeping, hand timing, communications, transport of people, Judges stand, etc.
- Is present in the competition area during all training.
- Takes part in all meetings of the Jury and of the team
- Works closely together with the officials of the Organising Committee and the FIS Technical Advisor.
- Is chairman of the Jury with a casting vote in case of a tie.
- If necessary, appoints members to the Jury.
- Has the right, if a slalom or giant slalom cannot be carried out on the homologated course because of “force majeure”, to move the competi-

tion to a “substitute course” proposed by the organiser. This on the explicit condition that the necessary homologation measures and requirements can be fulfilled.

2005.5.2 *During the competition*

The Technical Delegate

- Must be present in the course area.
- Works closely with the Jury, the team captains and the coaches.
- Keeps watch on whether the valid rules and directives are obeyed in regard to advertising, etc, on clothing and competition equipment.
- Supervises the technical and organisational conduct of the competition.
- Advises the organisation concerning the observance of the FIS Rules and Directives.

2005.5.3 *After the competition*

The Technical Delegate

- Helps with the compilation of the referee's disqualification report.
- Presents properly submitted protests to the Jury for decision.
- Signs the official result lists established by the competition secretary and gives the authorisation for the award ceremony.
- Fills out the TD report, including any supplementary reports, and is responsible for their dispatch within three days, to the FIS Office and the other appropriate places.
- Presents to the FIS Office any applicable proposals for changes in the competition rules on the basis of practical experience at the competition in question.
- For all interrupted or terminated competition(s) (Art. 2034), a fully detailed report is to be made by the TD to the FIS and the organising National Ski Association. The report has to contain a well-founded recommendation, whether the terminated competition is to be taken into consideration for FIS points or not.

2005.5.4 *In general*

The Technical Delegate

- Decides on questions which are not covered or are insufficiently covered by the FIS Rules, in so far as these have not already been decided by the Jury and do not fall within the purview of other authorities.
- Works very closely with the Referee and Assistant Referee.
- Has the right to order the interruption of a competition, if the prerequisites of art. 2033 are present, to cause the termination of a competition, if the prerequisites of art. 2034 are present.
- Has the right to propose to the Jury the exclusion of competitors from participation in the competition.
- Has the right to obtain support from the Organising Committee and all officials under its jurisdiction in all matters necessary to the fulfilment of his duties.
- In exceptional and extraordinary circumstances, the decision of the TD is final and binding. In such a case, the TD must put his decision in writing, together with the reasons for it, and bring it immediately to the attention of the FIS Office.

2005.6 **Expense Accounts**

The Technical Delegate has a right to reimbursement for his travel expenses up to a maximum of CHF 600.--[1] For longer distances (train, first class or air fare, tourist class) or car per kilometer, CHF 0.70 or equivalent which amount included any applicable highway taxes. The TD is entitled to receive free accommodation and meals during the assignment. This rule also applies to inspections.

In addition, a fixed daily rate of CHF 100--* is added for the travel days to and from, as well as each day of the assignment, which includes postage charges for mailing reports, etc. Double charges (e.g. travelling home on the same day as the last competition) is not permitted. If overnight accommodation during the journey to and from the assignment is necessary such expense shall be justified and reimbursed separately.

* This rule applies to all jury members at the Olympic Winter Games and FIS World Championships

2005.7 **Sanctions**

Sanctions can be imposed against Technical Delegates as well as all accredited participants and officials.

2006 Judges

2006.1 **Definition**

2006.1.1 The Judges for a competition will be a group of qualified officials with the correct licence for each competition level (certified by the FIS Snowboard Judges Working Group). The Judges must judge based upon the current FIS rules and judging criteria (see also FIS Snowboard Judges Manual).

2006.1.2 *Responsibility*

The Judges structure comes under the responsibility of the Snowboard Committee. The Snowboard Judges Working Group exercises this authority.

2006.1.3 *Prerequisites*

A Judge and Head-Judge are required to have the correct licence for the different competition levels undertaken (see also FIS Snowboard Judges Manual).

2006.1.4 *Development*

2006.1.4.1 The development for a Judge is:

- Applicant
- Written entrance examination (Judges Clinic)
- Candidate
- Practical Judges examination
- C-Licence Judge up to A-Licence

The maximum payment of CHF 600.-- is valid for all races except Olympic Winter Games, World Championships, World Cup and Continental Cup unless due to geographic considerations an exception is granted

2006.1.4.2 National Associations may nominate capable individuals as Judge Applicants for participation in the FIS development process. The Judges Working Group for Snowboard has the final decision as to their acceptance.

2006.1.5 Training

2006.1.5.1 The initial training of the applicant is the responsibility of each National Association.

2006.1.5.2 Applicant are required to attend a FIS International Judges-Clinic, pass a written examination and be approved by the FIS Snowboard Judges Working Group. The examination will be given in an official FIS language.

2006.1.6 Licences

2006.1.6.1 National Associations can issue only C level licences. A, A-prov., B and B-prov. can be issued only by FIS Snowboard Judges Working Group. (See FIS Snowboard Judges Manual).

2006.2 Assignment

2006.2.1 For Olympic Winter Games, FIS Snowboard World Championships and FIS Junior World Championships the appointment of the entire Judges panel is made by the FIS Council on recommendation of the Snowboard Committee.

2006.2.2 For all other international competitions the assignment of the entire Judges panel is made by FIS Snowboard Judges Working Group.

2006.3 Judges Replacement

2006.3.1 If a Judge for Olympic Winter Games, FIS Snowboard World Championships or FIS Junior World Snowboard Championships is unable to serve, the FIS Council as well as the National Ski Association to which the judge belongs, are to be notified. The FIS Council must appoint another judge immediately.

2006.3.2 For all other competitions the National Ski Association together with FIS to which the Judge belongs is responsible for the immediate appointment of a replacement. The Organising Committee in question and the FIS are to be informed immediately.

2006.3.3 If for unforeseen reasons, a Judge for the Olympic Winter Games, FIS Snowboard World Championships and FIS Junior World Championships does not arrive or arrives too late at the competition and thereby is partly or completely unable to fulfil their function at the competition, the Assistant Head Judge will replace them.

2006.4 Organisation of Assignments

2006.4.1 The organiser must establish contact with the Judges, especially with the Head-Judge in advance of the competition.

2006.4.2 Cancellations or postponements of competitions must be announced to all Judges and to the FIS immediately, taking into account any applicable deadlines.

2006.4.3 Concerning OWG, WCS, JWCS and WC, National Associations can make proposals to the FIS Snowboard Judges Working Group within the following deadlines:

OWG: Nations proposals must be made prior to the annual fall FIS meetings – approximately 1.5 years prior the games.

WSC: Nations proposals must be made prior to the annual spring FIS meetings – approximately about 1 year prior the competition.

WJC: Nations proposals must be made prior to or at the annual fall FIS meetings of the respective season.

WC: Nations proposals must be made prior to or at the annual fall FIS meetings of the respective season.

2006.5 The Rights and Duties of the Head Judge

- The Head Judge must possess a valid judging licence for the level of the competition.
- The Head Judge is a member of the Jury (with voting right)
- The Head Judge is preferably a non-judging member of the judging panel, responsible for checking the accuracy of the Judges decisions, checking the memory boards and scoring results with the Chief of Calculation and confirms the verified results with the TD and polices the Judges area / stand.
- The Head Judge may act as a substitute judge in emergencies.
- If six Judges are present, the Head Judge will not be a scoring judge.
- The Head Judge is responsible to check and insure that all Judges follow the current FIS Snowboard Judges Criteria's.
- Must participate at all jury and team captain meetings – The Head Judge should present the panel of Judges at the last meeting before the competition.
- The Head Judge is responsible for ensuring that all arrangements for transportation, accommodation, and expenses are organised for each judge. As well as being responsibility for the entire communications, scheduling, timetables, materials, clinics, attendance, etc. Thus the Head Judge must accept all responsibility for any irregularity in the service provided by the Judges to the competition.

2006.6 Judging Procedures – Halfpipe, Slopestyle and Big Air

Each judge will use memory boards/scorecards which indicate the Judges name and the name and bib number of each competitor. All memory boards/scorecards will indicate a score for each category utilized to assign a final score (closed scoring system).

2006.6.1 Judges must use the current FIS Snowboard Judging criteria at each FIS competition.

2006.6.2 Each judge maintains a permanent written record (memory board and score card) of their scores at all times.

2006.6.3 No scores shall be released as official until verified and approved by the Head Judge in conjunction with the TD.

2006.6.4 Judges will be separated on the Judges stand by a minimum of one half meter. There will be minimal discussion between the Judges concerning the competitor's scores (except as initiated by the Head Judge).

2006.6.5 No competitor or spectator will be allowed to approach the judge's area and talk to the Judges during the competition.

2006.6.6 Any problems or disputes related to the Judges or with the judging must be dealt with by the Jury. The Jury may refer any problem that it cannot resolve to the FIS.

2006.6.7 The Judges have a right to reimbursement for their expenses (See Art. 2006.8)

2006.7 Number of Judges for Halpipe, Slopestyle and Big Air

2006.7.1 For OWG and WSC there will be 8 Judges:
- 6 Scoring Judges – 1 Assistant Head Judge
- 1 Head Judge -

It is mandatory that all scoring Judges and the Head Judge be from different countries.

2006.7.2 For FIS World Cup, FIS Snowboard Junior World Championships and all other International competitions there will be a minimum of 6 Judges:
- A minimum of 5 Scoring Judges
- 1 Head Judge

In special cases at International competitions – COC and lower level FIS - 1 head judge + 3 or 4 scoring Judges can be allowed (exceptions can be made only by FIS).

2006.8 Expense Accounts

A Judge has a right of reimbursement for his travel expenses up to CHF 600.--[1] (highway taxes included), as well as free accommodation and meals during the assignment. This rule also applies to inspections as well as the trip to the competition (train, first class for longer distance air fare, tourist class or car per kilometer, CHF 0.70 or equivalent).
In addition a fixed daily rate of CHF 100.-*- is added for the travel days to and from, as well as each day of the assignment. Double charges (e.g. travelling home on the same day as the last competition) are not permit-

[1] The maximum payment of CHF 600.-- is valid for all races except Olympic Winter Games, World Championships, World Cup and Continental Cup unless due to geographic considerations an exception is granted.

ted. Overnight accommodation during the journey to and from the assignment is necessary, must be justified and reimbursed separately.

* This rule applies to all jury members at the Olympic Winter Games and FIS World Championships

2007 Course Setter / Course Builder

2007.1 Prerequisites

2007.1.1 For Olympic Winter Games, FIS Snowboard World Championships, FIS Junior World Snowboard Championships, World Cup:

– nomination by FIS (only experienced course setters will be considered).

2007.1.2 For all other international competitions entered in the International FIS Calendar:

– nomination by the FIS or through Jury or Organising Committee.

2007.2 Appointment

2007.2.1 For Olympic Winter Games, FIS Snowboard World Championships, FIS Snowboard Junior World Championships and World Cups, the appointment of course setters and course builders are made by the FIS after examination of the venue by the Race Director. The course setter for SBX will be the FIS Race Director together with the Jury and if utilized the Connection Coach(s).

2007.2.2 For international competitions included in the International FIS Calendar, the appointment of course setter is made by the Jury. For competitions in two runs i.e SL, GS, each run should to be set by a different course setter.

2007.3 Supervision of the Course Setters / Course Builders

2007.3.1 For all competitions the work of the course setters / course builders is supervised by the Jury.

2007.4 Organisation of the Assignment

For OWG, WSC, JWSC and WC competitions the course setters and course builders' assignment is managed by the Race Director in concert with the Jury. For all remaining competitions the assignment is managed by the Jury.

2007.5 Replacement of Course Setters

2007.5.1 For Olympic Winter Games, FIS Snowboard World Championships, FIS Junior World Snowboard Championships the Race Director in concert with the Jury names a replacement Course Setter.

2007.5.2 For all other competitions entered in the International FIS Calendar, the Jury names a replacement Course Setter.

2007.5.3 The replacement Course Setter should have the same qualifications as the absent course setter.

2007.6 Rights of the Course Setter

2007.6.1 To recommend the introduction of changes in the course terrain and security measures.

2007.6.2 Availability of a sufficient number of course workers for the setting of the course, so that the Course Setter can concentrate solely on the course setting activity.

2007.6.3 Be provided all necessary materials by the Chief of Course equipment.

2007.6.5 Choice of the color, with which to begin the flagging of the course. The visibility should be the determining factor.

2007.7 Duties of the Course Setter

2007.7.1 In order to set the course appropriately, respecting the terrain, the snow cover and the ability of the participating competitors, the Course Setter conducts a pre-inspection of the competition terrain in the presence of the TD, the Referee, the Chief of Competition, and the Chief of Course.

2007.7.2 The Course Setter who is setting the competition course should also considering available security measurements.

2007.7.3 Course Setters must take care to set a symmetrical course so as not to favor goofy or regular stance competitors. There should be no turn between the start and the first gate.

2007.7.4 Courses must be completely set and ready no later than the start of schedule course inspection so that the competitors are not disturbed during course inspection.

2007.7.5 The course setting is a task of the Course Setter. They are responsible for adhering to the rules of the ICR and is advised by members of the Jury.

2007.7.6 The Course Setters must participate in all team captains' meetings at which a report is to be made about the course.

2007.7.7 The course setters must cooperate with the Jury members.

2007.8 Arrival at the Competition Site

2007.8.1 For all competitions this should be the day before competition, if possible, but always before the first team captains' meeting. For OWG, WSC, WJC and WC competitions the Race Director will determine how many days in advance of the competition arrivals should be undertaken.

2008 Acceptance / Rights and Duties

2008.1 Officials, Medical* and Technical Personnel

Quotas for the right of access to the competition venue: up to 3 competitors:

- 3 trainers 2 doctors* 2 technicians
- 4 or 5 competitors:
- 3 trainers 2 doctors* 3 technicians
- 6 or 10 competitors:

– 5 trainers 2 doctors* 4 technicians
as well as representatives of the FIS in an official capacity.

These quotas include the national team officials (team captains, etc.). These persons must be identified by armband. If necessary, the Jury can reduce these quotas.
The persons accredited according to art. 220.3. and 220.5, as well as the official technicians and medical personnel must comply with all directions of the officials charged by the organiser with responsibility for overall security (e.g.: stewards, police, etc.).
The instructions given by the Jury have priority in all cases in regard to all accredited people i.e. journalists, coaches and team captains as well as all Medical personnel includes doctors, physiotherapists, first aid people, etc.

2008.2 Team Captains and Trainers

The team captains and trainers must be accredited by the organisers according to applicable quotas. The acceptance of accreditation confers on an individual the following rights and duties:

– to be a member of the Jury;
– to be nominated as a competition official if these have not been appointed by the FIS or if the appointed person is not present;
– to be issued with a pass or armband during the training or competition
– to be issued with a pass or armband stating the function or marked course.
– to follow all direction and instructions of the Jury

2008.2.1 Team captains and trainers must obey the ICR and the decisions of the Jury, and must behave in a proper and sportsmanlike manner.

2008.2.2 A team captain or trainer must fulfil the duties they have accepted as a member of the Jury, or as a course setter.

2009 Forerunners

2009.1 The organiser is obliged to provide at least three qualified forerunners.

In extraordinary conditions, the Jury may increase or decrease the number of forerunners. The Jury may designate different forerunners for each run.

2009.2 The forerunners must wear forerunner's start numbers (bibs) and all FIS required equipment (see 2607).

2009.3 The nominated forerunners must command sufficient riding ability to cover the course in a racing fashion.

2009.4 Competitors disqualified in the first run are not permitted to start as forerunners in the second run. Competitors suspended for disciplinary reasons cannot be named as forerunners.

2009.5 The Jury determines the forerunners and their start order. After an interruption of the competition additional forerunners may be authorised as needed.

2009.6 The times of the forerunners may not be published.

2009.7 Upon request, the forerunners shall report to members of the Jury regarding the snow conditions, the visibility and the course line.

2010 Competitors' Responsibilities

2010.1 Insurance

Each competitor must provide adequate accident insurance and must have signed the FIS athletes declaration for an international FIS licence.

2010.2 Start numbers (Bibs)

Shape, size, lettering and attachment method may not be altered on penalty of being sanctioned. The figures must be at least 8 cm high and easily legible.
Start numbers can carry commercial name or commercial mark if every start number has the same marking. The individual letters or numbers may not surpass a height of 10 cm.

2010.3 Advertising

The advertising on material and equipment which is worn during competitions and training must conform with the FIS guidelines.

2010.4 Competitors must have a thorough knowledge of the rules, regulations and judging criteria.

2010.5 Competitors, if applicable, must attend the awards ceremony, and must properly wearing the correct event bib. Also, winners must attend media activities. The time for the awards ceremony must be fixed in the official competition announcement information. The competitor is not obliged to attend award ceremonies held on a different day than the competition day.

2010.6 The use of crash helmets is compulsory for all snowboard events. Helmets used in FIS Snowboard events shall be specifically designed and manufactured for the respective discipline and shall bear a CE mark and conform to recognized and appropriate standards such as CEE 1077 or US 2040, ASTM 2040.

2011 Age Limits

2011.1 Competition and Calendar Year Definitions

The FIS competition year is July 1st – June 30th of the following year. The Calendar year is January 1st – December 31st.

2011.2 Halfpipe and Slopestyle Age Limits

In order to compete in international Halfpipe and Slopestyle competitions, a competitor must have reached the 13th birthday before the end of the calendar year. To compete in Major competitions, a competitor must have reached the 15th birthday before the end of the calendar year in which the FIS Competition year begins.

2011.3 Parallel, Snowboard Cross and Big Air Age Limits

In order to compete in international and Major Parallel, Snowboard Cross and Big Air competitions, a competitor must have reached the 15th birth-

day before the end of the calendar year in which the FIS Competition year begins.

2011.4 Major Events

Major competitions are defined as: World Cup, World Championships and Olympic Winter Games.
In order to compete in all Major competitions, a competitor must have reached the 15th birthday before the end of the calendar year in which the FIS Competition year begins.

2011.5 Age for International Juniors

The minimum ages' for Halfpipe and Slopestyle are according to 2011.2 and for Parallel, Snowboard Cross and Big Air according 2011.3.
For PGS, PSL, SBX and Team SBX the participation in international junior competitions is restricted to those competitors whose19th birthday falls in or after the calendar year in which the FIS Competition year begins.
For BA, HP and SBS the participation in international junior competitions is restricted to those competitors whose 17th birthday falls in or after the calendar year in which the FIS Competition year begins.
(see table for details)

2011.6 Classification at International Competitions

Admitted years of birth

FIS Competition Year	**12/13**	**13/14**	**14/15**	**15/16**
Children	1999 1998	2000 1999	2001 2000	2002 2001
Juniors	1997 1996 1995 1994 1993**	1998 1997 1996*** 1995 1994**	1999 1998 1997*** 1996 1995**	2000 1999 1998*** 1997 1996**
Licenced Competitors Alpine, BA & SBX*	1997 and earlier	1998 and earlier	1999 and earlier	2000 and earlier
Licenced HP & SBS*	1999 and earlier	2000 and earlier	2001 and earlier	2001 and earlier
WSC, WC, OWG (all events)	1997 and earlier	1998 and earlier	1999 and earlier	2000 and earlier

*FIS Junior World Championships minimum age
**FIS Junior World Championships maximum age (PAR,SBX)
***FIS Junior World Championships maximum age (BA,HP,SBS)

2020 Start, Finish, Timing and Calculations

Technical Installations

2020.1 Communications & Cabling

In all international competitions, there must be multiple communication (telephone or radios, etc.) between the start and finish. Voice communication between starter and finish must be assured by fixed wire connection or radio. In case of radio, this must be on a separate channel from that used by any other function.
In Olympic Winter Games, FIS Snowboard World Championships, World Cup and FIS Junior World Snowboard Championships all communications and timing connections between start and finish must be assured by fixed wiring (except HP).

2020.2 Timing Equipment

For all competitions in the FIS Calendar, electronic timers, start gates and photocells homologated by the FIS must be used. Specifications and procedures for timing are more fully described in a separate FIS Timing Booklet.

2020.2.1 Electric Timing

For all international competitions, FIS World Cup, FIS Continental Cups and FIS competitions, two synchronized electronically isolated timing systems operating in time-of-day must be used. One system will be designated system A (main system), the other system B (back up system) prior to the beginning of the competition.

All time of day times must be immediately and automatically sequentially recorded on printed strips to at least the 1/1000th (0.001) precision. Both systems must allow for the calculation of net times by the mathematical comparison of each competitors start time to finish time. The final result for each competitor's run is then expressed to 1/100th (0.01) precision by truncating the calculated net time on course.

For all competitions, system A must be connected to its respective start gate contact. System B must be separately connected to another electronically isolated start gate contact.

Refer to the FIS Timing Booklet for more details regarding cabling and complete wiring descriptions, diagrams and start gate installations.

All timing equipment and technical installation should be set up or protected in such a way that danger to the competitors is avoided where possible.

Synchronization of the timing system must occur within 60 minutes of the start of each run – Minimum of 30 minutes is the recommended time before the start. Synchronization of all systems must be maintained throughout each run. Timers may not be re-synchronized during a run.

2020.2.2 *Start Gate*

The posts supporting the starting gate should be approximately 80–90 cm apart. Additional posts may be secured in place in order to "push off", if the timing gates are deemed not usable for the "push off".

The starting gate, consisting of two (Parallel), three (Triple-S), four (SBX) or six (SBX) independent starting mechanisms connected on to a one wand system or start system will be placed so that starting is impossible without its opening or engaging.

2020.2.3 *Photocells*

For all competitions, there must be two photocell system(s) homologated by the FIS installed at the finish line. The cells are placed in such a height that a competitor finishing normally cuts the beam with the lower half of his legs, between the ankle and the knee.

2020.2.4 *Hand Timing*

Manual (hand) timing, completely separate and independent of the electronic timing, must be used for all competitions listed in the FIS Calendar. Stopwatches or hand operated battery powered timers that are installed at both the start and the finish and capable of expressing times to at least 1/100th (0.01) precision qualify as proper hand timing devices. They must be synchronized prior to the start of each run, preferably with the same time-of-day as system A and system B. Printed records, either automatic or hand-written, or recorded hand times must be immediately available at the start and at the finish.

2020.2.5 *Presentation of times and scores*

Organisers shall provide appropriate facilities for continuous visual or acoustic presentation of all registered times and/or scores of all competitors.

2020.2.6 *Timing without Cable*

For FIS Level 3 competitions only, it is permitted to use homologated timing equipment in such a way that a on hill cable connection system between the start and finish is not required. Refer to the FIS Timing Booklet for a detailed discussion of how this is to be undertaken.

2020.3 Timing

2020.3.1 With electric timing, the time is taken when a competitor crosses the finish line with any part of his body or equipment and so breaks the beam between the timing photo cells.

In case of a fall at the finish where the competitor does not come to a full stop, the time can be taken without both of the competitor's feet having crossed the finish line. (see 2025.3)

- For the registered time to become valid, the competitor must immediately completely cross the finish line with the board. (Without the board will disqualify the competitor).
- With hand timing the time will be taken when any part of the competitor crosses the finish line.
- The finish controller determines the correctness of passage across the finish line.

2020.3.2 In the case of a failure of the main electric timing system (system A), the results of the electric back-up system (system B) will be valid as per art. 2020.2.1.
In case of a failure in the lines of the timing system between start and finish, this back-up system will allow the calculation of the times to 1/1000ths of a second.
In case that calculated net times from either system A or system B are not available for a competitor, the calculated net manual time as per art. 2020.3.2.1 will be considered valid.

2020.3.2.1 Utilization of times taken by hand
Hand times may be used in the official results after a correction has been calculated.

Calculation of the correction
Calculate the difference between the times taken by hand and the electric times of the 5 competitors starting before the missing time and the 5 starting after or if necessary the 10 nearest competitors.
The sum of the 10 time difference is divided by 10 to give the correction which must be applied to the hand time of the competitor without an electronic time.

2020.3.3 The official timing strips from the printer will be given to the Technical Delegate for review. They will be kept by the Organisers until the official approval of the competition or any appeal dealing with timing or competition results.
A technical timing report form as prescribed by the FIS must accompany the competition results and must be reviewed and signed by the chief of timing and reviewed and signed by the TD as his approval of the competition. All printed records from system A, system B and hand timing must be retained by the Organiser for a period of three (3) months after the competition or after any appeal dealing with timing or competition results.

2020.4 Private timing of the teams
Any request to install private timing equipment has to be made to the Jury by the team captain concerned, and the Jury decides concerning approval of the installation. At Olympic Winter Games and FIS Snowboard World Championships only the organisers timing equipment is allowed.

2021 Start and Finish Officials

2021.1 The Starter
Must synchronize his watch with those of the Assistant Starter and by telephone or radio with the chief timekeeper within ten minutes of the start. The starter is responsible for the warning signal and the start command as well as for the accuracy of the intervals between these signals. He assigns the supervision of the competitors to the Assistant Starter. For Freestyle events the starter must be in contact with the Head Judge.

2021.2 The Assistant Starter
The Assistant Starter is responsible for calling the competitors to the start in their correct order.

2021.3 The Start Recorder

The Start Recorder is responsible for recording the actual start times of all competitors.

2021.4 The Chief Timekeeper

The Chief Timekeeper is responsible for the accuracy of the timing. He synchronizes the watches with the starter as shortly before and after the competition as is possible. He must publish unofficial times as quickly as possible (on the score-board, etc.) If the electric timing fails, the Chief Timekeeper must communicate this fact immediately with the Start Referee and the TD.

2021.5 The Assistant Timekeeper

Two Assistant Timekeepers operate stop watches according to art. 2020.2.4. One Assistant Timekeeper maintains a complete record with the registered times of all competitors.

2021.6 The Finish Controller / Chief of Finish (Snowboard Cross)

The Finish Controller / Chief of Finish has the following duties:

- Supervision of the section between the last gate and the finish.
- Supervision of the proper crossing of the finish line.
- Recording the order of finish for all competitors who complete the course.

2021.7 The Chief of Calculations

The Chief of Calculations is responsible for quick and accurate calculation of results. He supervises the immediate duplication of unofficial results and upon notification by the TD publishes the official results after expiration of the protest interval, or after any protests have been dealt with.

2022 The Start

2022.1 The Start Area

The start area must be closed off to everyone except the starting competitor, accompanied by only one trainer and the start officials. The start area must be protected appropriately against inclement weather. A special roped off area must be provided for trainers, team captains, service personnel etc., in which they may take care of the waiting competitors without being interrupted by the public. An adequate shelter must be prepared for the competitors waiting for the call to start.

2022.2 The Start Ramp

The start ramp shall be prepared in such a way that the competitors can stand relaxed on the starting line and can quickly reach full speed after leaving the start. Push off posts will be installed on the starting installation for all alpine and Snowboard Cross events, the specifications will be adjusted to the needs of the specific event.

2022.3 Start Procedure

No official or attendant who could possibly give an advantage to or disturb the starting competitor may be behind him. All outside help is forbidden. By order of the starter, the competitor must take his place behind the

wand or start mechanism. The starter must not touch the competitor at the start. Pushing off from the start posts or other similar aids is allowed.

2022.4 Start Signals/Commands

2022.4.1 For all single timed events (GS, SL, SBX) the start signal is as follows:
Ten seconds before the start, the starter will tell each competitor »Ten Seconds». Five seconds before the start, he shall count »5, 4, 3, 2, 1» and then give the start command »Go – Partez – Los».

If possible, an automatic audible signal is to be used. The starter will let the competitor see the start clock.

2022.4.2 For Parallel events the start command is as follows:
Before the starter gives the command – “Go" or a single audible signal, he must first ensure that the competitors are ready by asking: “red course ready, blue course ready, attention”.
“Riders ready” only can be used in connection with an audible command (series of short beeps followed by one different (louder or longer) starting beep when doors open).

2022.4.3 For Freestyle events (HP, BA, SBS) the start command is as follows:
Before the starter gives the command “Go” to the next competitor he must wait till he receives a “Judges Ready” from the Head-Judge. The starter confirms to the Head-Judge for example “bib number 22 dropping in right (or left)”.

2022.4.4 For SBX Finals the start command is as follows:
„Riders ready – attention” – randomly 1–4 seconds before the doors open (this 1–4 seconds is up to the starter).

2022.5 Start Timing

The start timing shall measure the exact time the competitor crosses the start line with his leg below the knee.

2022.6 Delayed Start

A competitor who is not ready to start on time will be sanctioned. The Start Referee may, however, excuse such a delay if, in his opinion, the delay is due to “force majeure”.
For example, breakdown of a competitor's personal equipment or minor sickness of a competitor, does not constitute “force majeure”.
In case of doubt, the Start Referee may allow a provisional start, which start must be confirmed or denied by the Jury

2022.6.1 In the case of fixed start intervals, the delayed competitors may start at the fixed interval after he has reported to the Start Referee, in accordance with the decision of the Start Referee. The start referee informs the Jury as to when (after which start number) a delayed competitor is starting.

2022.6.2 In the case of irregular start intervals, the delayed competitor will start according to art. 2105.3.1. The Start Referee informs the Jury as to when (after which start number) a delayed competitor is starting.

2022.6.3 The Start Referee makes the decisions after consultation with the Jury and must record the start numbers and names of competitors who were sanctioned by not being allowed to start because of late appearance, or who were allowed to start in spite of late appearance, or who were allowed to start provisionally.

2022.7 Valid and False Starts

In competitions with a fixed start interval the competitor must start on the start signal. The start time is valid if it occurs within the following limits: 5 seconds before and 5 seconds after the official start time. A competitor who does not start within that space of time will be sanctioned.

For Freestyle (HP + SBS + BA) events the start time is valid if it occurs within the following limits: within 1 minute after the official “Go” from the starter. A competitor who does not start within that space of time will be sanctioned. The start referee must inform the Referee or Head-Judge of the start numbers and names of the competitors who made a false start or have contravened the starting rules.

2023 Public Address System

2023.1 Music can be used in all events but is mandatory for Halfpipe and Big Air. The sound system must be powerful enough so that the competitor can hear the music clearly and without distortion while on any part of the course. The speakers must be on the side(s) of the course, and evenly distributed from top to bottom. The sound should reach the competitor on the whole course simultaneously.

2023.2 The Chief of Sound will be in radio contact with the competition officials at all times.

2023.3 The Chief of Sound is responsible for stock music during the competition and is responsible for the cueing of tapes.

2024 Course and Competition

2024.1 Course

2024.1.1 Technical Parts of a Competition Course

Start and finish installations, television towers, measuring equipment, sponsor advertising equipment, etc. are necessary items for a competition.

2024.2 Course Setting

2024.2.1 Assistance

Assistance must be provided for the course setter, at a time to be fixed by the Jury, so that they can concentrate on the actual course setting and not be distracted by fetching poles, etc.

The Chief of Course equipment must provide enough of the following:

- enough blue and red poles (long poles and stubbies)
- a corresponding number of flags, divided by colors
- sledge-hammers, drills, gate-keys, wedges, etc.
- enough gate numbers
- coloring matter for marking the position of the poles.

2024.2 .2 Triangular banners position

All gates with triangular banners must be set in a right degree angle (90°) to the general fall line of the course.

2024.2.3 Marking of the gates

The positions of the gate poles are to be marked with an easily recognizable coloring substance which remains visible throughout the entire competition.

2024.2.4 Numbering the gates

The gates must be numbered from top to bottom of the course and the numbers attached to the outside pole. Start and finish are not counted or considered as gates.

2024.2.5 Marking of the course and terrain

In all events the course, at the direction of the Jury, may be marked using:

- small pine needles or similar material spread on the course *and/or*
- colored dye used on such things as vertically from gate to gate, lip of the Halfpipe, edges on kickers inclusive landing, etc. as well as horizontally across the course (SBX, etc.), notably on the approaches indicating changes in terrain, jumps, transitions, finish lines etc.

2024.2.6 Spare Poles

The Chief of Course is responsible for the availability and correct placing of enough spare poles. They must be placed so that the competitors are not mislead or confused by them.

2024.3 Warm up slope

Appropriate warm up slopes, closed to the public, must be made available and should be as similar to the competition course as possible.

2024.4 Closing and modification of the course

On a closed course no one except for the Jury is permitted to change gates or flags, mark the course or modify the course structure (jumps, bumps, etc.).

Competitors who enter a closed competition course will be subject to being sanctioned by the Jury (exception: normal competitor inspection).

Photographers and camera teams are allowed into the closed course area for the necessary documentation of the competition. Their total number can be limited by the Jury. They will be located by the Jury where possible and may only remain in this area.

Trainers, servicemen etc., who are allowed on a closed competition course are to be determined by the Jury. Similarly the number and places for photographers and camera teams, insofar as they are situated inside the barriers, must be approved by the jury.

2024.5 Competition

2024.5.1 Passage of the Gates
A gate must be passed according to art. 2070.4.1.

2024.5.2 Interdiction to Continue after a Gate Fault
If a competitor misses a gate, he may no longer continue through further gates and should abandon the course as soon a possible.

2025 The Finish

2025.1 The Finish Area

2025.1.1 The finish area must be plainly visible to the competitor approaching the finish. It must be wide, with a gently sloped smooth outrun. It must be prepared.

2025.1.2 In setting the course with gates, particular attention shall be paid to directing competitors across the finish on a natural line adapted to the terrain.

2025.1.3 The finish area is to be completely fenced in. Any unauthorised entry must be prevented.

2025.1 .4 Finish installations and closures should be set up or secured through suitable security protection measures.

2025.1.5 For competitors who have finished their runs, a special area, separated from the actual finish, is to be provided. In this area or corridor, it should be possible if applicable to make contact with the press (written and audio-visual).

2025.2 The Finish Line and its Markings

The finish line is marked by two posts (or three or four for Parallel events) or vertical banners which are connected by a horizontal banner.

In PSL/PGS each finish must be at least 8 m wide (together minimum 16 m), in GS and SBX the finish must be no less than 10 m wide, in HP the finish line position will be decided by the Head Judge and extends from roll out deck to roll out deck across the bottom of the pipe (the finish line is the last take off point for judging).

In exceptional cases, the Jury can decrease this distance for technical and security reasons or because of the terrain. The width of the finish is considered to be the distance between the two finish posts or banners. The timing supports must also be at least this far apart and are to be protected. The timing supports can usually be placed directly behind the finish posts

or banners, on the downhill side. The finish line must be clearly marked horizontally with coloring substance.

2025.3 Crossing the finish line

The finish line must be crossed:

- with at least one foot attached to the board
- with both feet in case of a fall in the immediate finish area. In this case the time is taken when any part of the competitor's body or equipment stops the timekeeping system.
- in Snowboard Cross the competitors place of finish is determined when any part of the body or snowboard crosses the finish line.

2026 Microphones at Start and Finish

Within the areas of start and finish as well as in the area of the fenced section, the use of microphones installed without the agreement of the organiser (“roving” and so-called “gallows”, microphones set into cameras or other technical instruments) is forbidden in training as well as in the competition.

2027 Calculation and Announcement of Results

2027.1 Unofficial Times and Scores

Times taken by the timekeepers shall be considered unofficial times. Scores announced before they have been checked and verified shall be considered unofficial. They shall be posted on a score-board which shall be readily visible from the area provided for the competitors who have finished, and from the press area. Whenever possible, unofficial times and scores should be announced to the public over loud-speakers. In Halfpipe, Snowboard Cross and Slopestyle events a scoreboard should be provided at both the top and bottom of the course.

2027.2 Announcement of Unofficial Times, Scores and Disqualifications

2027.2.1 As soon as possible after completion of the competition, (competition or heat in Snowboard Cross) unofficial times, scores and disqualifications shall be announced on the official notice board and also at the finish.

The 15 minute time limit for filing of protests, in all but Snowboard Cross (See Art. 2027.2.2), commences following the posting and or announcement of disqualifications.

2027.2.2 The announcement of unofficial times at the finish and start, together with written and oral announcement of disqualifications, may replace the announcement on the official notice board. In this case it can be decided likewise that protests can be delivered orally to the referee at the finish line. In Snowboard Cross any protests must be submitted before the next competition or heat begins), in all other event other than Snowboard Cross, at the latest, within 15 minutes after the announcement of the disqualification or sanction. Protests submitted after such time will not be accepted and will be considered null and void. The Team Captains must be informed beforehand.

2027.3 Official Results

2027.3.1 Official results are determined from the official times, scores or finishes (Snowboard Cross) of those competitors who have been officially classified.

2027.3.2 When two or more competitors have the same time, the same score, the same number of points or the same place they will receive the same place (points) but the competitor with the higher start number shall be listed first on the official list of results.
Ties for competitors which are out of the competition (e.g. do not advance to Elimination, Semifinals or Finals) will remain as final results and listed with the same rank already on the partial result lists (e.g. Qualification Results, Elimination Results, Semifinal Results)
Ties for competitors which are out of the competition (e.g. do not advance to Elimination, Semifinals or Finals) will remain as final results and listed with the same rank already on the partial result lists (e.g. Qualification Results, Elimination Results, Semifinal Results)

2027.3.3 The official result list must contain the following:

- the name of the organising club or association;
- the name of the competition, the site, discipline and category (men or ladies);
- the date of the competition;
- all technical data such as the name of the course, altitude at start and finish, vertical drop, the length of the course, number of features, course builder, Inclination HP, Height of BA jump, Inclination landing in BA, etc.
- the names and nations of the members of the Jury and the Judges;
- for each run, the names and nations of the course setter and the forerunner(s), and if applicable the number of gates and the start time;
- the weather, the snow conditions on the course and the air temperature at start and finish areas;
- all details concerning the competitors, finish order, start number, FIS competitor code number, name and first name, nation time and competition points;
- the start number, FIS competitor code number, name, first name and nation of those competitors who were not at the start, did not finish or were disqualified in each run;
- the names of the official service companies, e.g. timing company, computer service etc.
- Complete Scoring Calculations (i.e.: individual Judges scores, total score applicable for each run and category of judging; the signature of the Technical Delegate.
- the signature of the Technical Delegate

2027.3.4 The result lists (official and unofficial) as well as the start lists must be printed on white paper:

2027.3.5 Nations must be indicated by the designated FIS code of three capital letters (see FIS Bulletin or FIS Website).

2027.3.6 The official Result lists for World Cup and higher level events should list additional information:
Freestyle: Name of the different tricks
Alpine: Minimum two split times
Snowboard Cross: Minimum three split times and with ranking

2028 Award Ceremony

The award ceremony may not be held before the completion of the competition and not before the Technical Delegate has authorised it. The organiser has the right to present the probable winners before this time. This presentation is unofficial and is organised at a place different from that of the official award ceremony.

2030 Start Order

For the Olympic Winter Games, FIS Snowboard World Championships, Junior World Snowboard Championships, FIS World Cup and the FIS Continental Cups special regulations may be issued.

2031 Starting Order and Seeding

2031.1 The classification of competitors who are present is made by the Jury.

2031.2 The FIS points list provided by FIS must be used for the classification of competitors. If a competitor does not appear in the last valid FIS points list, he shall be assigned to that group of competitors without points.

2031.3 The FIS points list will be used to determine the starting order. The first group will consist of 16 and can be reduced to 10 if there are less than 30 competitors or such other number as determined by the Jury.

For Alpine events and Snowboard Cross a random manual draw will take place for the first group. The remaining competitors will be placed according to their ranking. All competitors without points will be drawn.

For Freestyle events (HP, SBS and BA) a random draw by the computer can be done for the first group. The remaining competitors with points will be also randomly drawn within their grouping as well as all competitors without points within their grouping.

At World Cup competitions special rules for World Cup apply.

2031.4 The draw must take place on the day before the competition. This is not valid for night competitions.

2031.5 The draw must be held in a team captains meeting. A double draw is recommended with a simultaneous draw of the start number and the name of the competitor.

2031.6 Starting Order in Extraordinary Conditions (Excluding First Seed)

2031.6.1 In extraordinary conditions, the Jury may change the starting order (when snowing, etc.). A group of at least 6 competitors, nominated in advance, start before start number 1. These 6 competitors are drawn from among

the last 20% of the start list. They will start in reverse order of their start numbers. This rule is not applied when the organiser provides at least six qualified forerunners.

2032 Start Intervals

2032.1 Regular intervals

In Giant Slalom, Slalom, competitors will normally start at regular intervals in between 30–60 seconds. The Jury may fix different intervals.
For Freestyle events the start interval is controlled by the Head-Judge.

2032.2 Special Start Intervals

The start interval may be changed under the following conditions:

2032.2.1 To meet TV transmission broadcast requirements the Jury may consider a request to allowing increasing of the start interval.

2032.2.2 The start interval for the first 25 competitors (Bib group 1–25) may be 120 seconds maximum.

2032.2.3 The start interval may not be less than 30 seconds in giant slalom.

2033 Provisional Re-runs

2033.1 Prerequisites

2033.1.1 A competitor who is hindered while competing by the error of an official, by a spectator, by an animal, or by any other justifiable causes outside their control can apply to any member of the Jury for a provisional re-run immediately after the occurrence of the interference. This claim can also be made by the team captain of the hindered competitor. The competitor must leave the course immediately or as soon as feasible after the interference and may not continue riding further down in the course (only on the side of the course). This does not apply in Snowboard Cross Finals.

2033.1.2 In special situations or other technical failures i.e. failure of start gate(s) or timing systems), the Jury may order a provisional re-run.

2033.1.3 If a competitor is stopped by a yellow flag in SBX, he has the right to request a provisional rerun, under the condition that the Jury considers this possible from an organisational point of view. The jury should ensure that the competitors provisional re-run takes place before the last competitor on the start list.

2033.2 Grounds for Interference

2033.2.1 Blocking of the course by an official, a spectator, an animal, or other hindrance.

2033.2.2 Blocking of the course by a fallen competitor, who did not clear the course soon enough (does not apply in Snowboard Cross Final).

2033.2.3 Objects in the course such as equipment of a previous competitor (does not apply in Snowboard Cross Final).

2033.2.4 Activities of the first aid service which hinder the competitor.

2033.2.5 Absence of a non-marked gate knocked down by a previous competitor, and not promptly replaced (does not apply in Snowboard Cross Final).

2033.2.6 Other similar incidents, which, beyond the will and control of the competitor, cause significant loss of speed or affects the competitors performance and thereby his result (does not apply in Snowboard Cross).

2033.3 Validity of a Provisional Re-Run

2033.3.1 In case the Referee or another Jury member is unable to question immediately the appropriate officials or to judge the justification for the provisional re-run request, he may, to avoid delay for the competitor or competition, grant a provisional re-run. This provisional rerun will be valid only if it is confirmed by the Jury.

2033.3.2 If the competitor was already disqualified before the incident entitling him to request a provisional re-run, the request for the provisional re-run is deemed to be not valid.

2033.3.3 The provisionally or definitively approved re-run remains valid even if it proves worse than the original run.

2033.3.4 If the claim for provisional re-run is shown to be unjustified, the competitor will be subject to sanction(s).

2033.4 Start Time of the Provisional Re-Run

2033.4.1 In case of fixed start intervals, the competitor may start a provisional re-run at the fixed interval, after he has reported to the start referee. The start referee's should allow the competitor a reasonable amount of time to compose themselves prior to such start.

2033.4.2 With non-fixed start intervals, the procedure is in accordance with the provisions of art. 2022.4 and 2022.7.

2034 Interrupted Competition or Training

If an interrupted run cannot be finished on the same day, it is to be treated as a terminated run.

2034.1 Interruption by the Jury

2034.1.1 To allow for course maintenance, the times and durations of any interruption(s) should be announced immediately.

2034.1.2 For unfavorable or inconsistent weather, security and snow conditions.

2034.1.2.1 The competition will to be restarted, as soon as the Jury determines that the work on the course has been finished and if the weather and snow conditions are such that a proper competition can be assured.

2034.1.2.2 A repeated interruption of the competition ordered for the same reason(s) should lead the Jury to consider termination of the competition.

2034.2 Brief Interruption

Each member of the Jury is entitled to order a brief interruption of an competition. A gate judge may request a brief interruption.

2034.3 **Report**

In all such cases, a fully detailed report by the TD is to be made to the FIS and the organising national association. The TD report has to contain a well founded recommendation, whether the terminated competition is to be taken into consideration for FIS points or not.

2035 Termination of a Competition

2035.1 **By the Jury**

- if the competitors are significantly affected by external disturbing influences,
- if different conditions arise or the proper conduct of the competition seems no longer to be guaranteed.

2035.2 **Reports**

see art. 2034.3

2036 Appeal

Appeals can be made against the decision of the Jury (art 2057), and protests can be made against the decision of the Technical Delegate (art. 2051) for cancellation, interruption or termination of a competition and must be made to the FIS Office within 24 hours of the announcement of the decision in question.

2037 Not Permitted to Start / Sanction

A competitor will be subject to being sanctioned, which sanction may include not be permitted to start in any FIS International Snowboard competition who:

2037.1 wears obscene names and/or symbols on clothing and equipment (art. 206.7) or behaves in an unsportsmanlike manner (art. 205.5).

2037.2 violates the FIS rules in regard to equipment (art. 222) and commercial markings (art. 207).

2037.3 refuses to undertake a FIS required medical examination (art. 221.2)

2037.4 trains on a course closed for competitors (art. 2024.4)

2037.5 does not wear a helmet in any of the Snowboard Competitions that conforms to the FIS competition equipment specifications (see art. 2010.6).

2037.6 was eliminated from first run.

2037.7 If a competitor has actually started in a competition and is later determined by the Jury to have been in violation of these rules, the Jury must sanction the competitor.

2038 Penalties / Sanction

A penalty / sanction may be assessed by the Jury against a competitor where the competitor:

2038.1 violates the rules governing advertising on equipment (art. 207.1)

2038.2 alters the start number in a way which is not allowed (art. 2010.2)

2038.3 does not wear or carry the official start number.

2038.4 goes through a gate or practices turns parallel to those required by gates on a course.

2038.5 is not ready to start on time or makes a false start.

2038.6 continues the competition after committing a gate fault.

2038.7 receives outside help during a competition.

2038.8 would be deemed to be in violation of any items in art. 2037.

2039 Disqualifications /Sanctions

A disqualification / sanction may be assessed by the Jury against a competitor where the competitor:

2039.1 participates in the competition under false pretences.

2039.2 either jeopardizes the security of persons or property or actually causes injury or damage. Is determined to have caused interference to another competitor.

2039.3 trains on a course closed for competitors, alters the course in a manner forbidden according to the art. 2024.3 or acts contrary to the instructions of the Jury as to the execution of the training or the competition,

2039.4 does not wear an acceptable helmet pursuant to the rule or the official start number in training, at the inspection, in the competition or alters this start number in any way.

2039.5 appears late at start, makes a false start or violates the regulations for the execution of the start,

2039.6 fails to cross the gate lines with at least one foot buckled to the board.

2039.7 fails to cover the course on their board or to pass the finish in accordance with the art 2025.3

2039.8 accepts outside help in any form during the competition,

2039.9 fails to give way to an overtaking competitor at the first call thus interfereing with his run, does not apply in Snowboard Cross Final.

2039.10 unjustifiably requests a provisional re-run, which is later shown to be unsubstantiated,

2040 Appeals Commission

2040.1 See art. 225

2050 Protests

2051 Types of Protests

2051.1 Against admittance of competitors or their competition equipment,

2051.2 Against the course or its condition,

2051.3 Against another competitor or against an official during the competition,

2051.4 Against disqualifications,

2051.5 Against timekeeping or score calculations,

2051.6 Against instructions of the Jury.

2052 Submission of Protests

The various protests are to be submitted as follows:

2052.1 Protests according to the art. 2051.1–2051.6 at the location designated on the official notice board or at a place announced at a team captains' meeting.

2052.2 Protest according to the art. 2034 with the FIS.

2052.3 A Jury may only accept a protest if it is based upon physical evidence.

2052.4 A Jury is only permitted to re-evaluate it’s previous opinions where new physical evidence exits that relates to the original jury opinion.

2052.5 All Jury decisions are final, except those that may be protested or appealable under the rules contained herein.

2053 Protest Deadlines

2053.1 Against the admittance of a competitor:

– before the draw.

2053.2 Against the course or its condition:

– not later than 60 minutes before the beginning of the competition.

2053.3 Against another competitor or competitor's equipment or against an official because of irregular behaviour during the competition:

– within 15 minutes after the last competitor has passed the finish.
– for Snowboard Cross Finals and PGS Finals before the next heat begins

2053.4 Against disqualification:

– within 15 minutes after the posting or announcement of the disqualification.

2053.5 Against the timekeeping:

– within 15 minutes after the posting of the unofficial result list.

2053.6 Against the instructions of the Jury:

– immediately and no later than the deadlines for submittal of protests according to the art. 2053.4.

2053.7 Protests Concerning False Calculation and Clerical Errors

A complaint, based not on an alleged breach of the rules on the part of an official or a competitor, but on an alleged error in calculating the results, shall be considered, if sent by registered letter through the competitor's association at any time within one month of the date of the competition. If the mistake shall be proven, a corrected list of results shall be published and any prizes redistributed.

2054 Form of Protests

2054.1 Protests are to be submitted in writing.

2054.2 As exceptions, protests according to the art. 2051 .3, 2051.4 and 2051.5 can be made verbally (art. 2027.2.2).

2054.3 Protests must be substantiated in detail. Proof must be submitted and any pieces of evidence must be included.

2054.4 The sum of 100.-- Swiss Francs or the equivalent in another valid currency or such sum as announced by the Jury must be deposited with the submittal of the protest. This deposit will be returned if the protest is upheld, otherwise it goes to the FIS for development activities.

2054.5 A protest may be withdrawn by the protesting party before the publication of a decision by the Jury. In this case, the money deposit must be returned.
A withdrawal of the protest is, however, no longer possible when the Jury or a member of the Jury takes, for reason of time, an intermediate decision, e.g. a provisional decision.

2054.6 Protests not submitted on time or submitted without the protest fee are not to be considered.

2055 Authorisation

The following are authorised to submit protests (written or verbal according to the rules):

- National Associations
- Trainers
- Team Captains
- Competitors (SBX)

2056 Settlement of Protests by the Jury

2056.1 The Jury meets to deal with the protests at a predetermined place and time as announced by the Jury.

2056.2 For protest(s) concerning gate passage, the gate judge and, if needed, the gate judge of the adjacent gate combinations or any other involved officials, the competitor in question and the protesting team captain or trainer shall be invited to attend the Jury meeting. Moreover, any additional evidence such as videotape, photos, films should be reviewed and considered.

2056.3 Only the Jury members are to be present for the vote. The TD chairs the proceedings. Minutes of the Jury meetings are to be kept and signed by all voting members of the Jury. The decision requires a majority of all voting members of the Jury, not just of those present. In case of a tie, the TD's vote is decisive.

The rules on which the decision is to be based shall be applied and interpreted in such a way that the integrity of the discipline is guaranteed.

2056.4 The decision is to be made public immediately after the Jury meeting by posting the decision on the official notice board with the publication time stated. In Snowboard Cross the decision maybe announced orally.

2057 Right of Appeal

2057.1 The Appeal

2057.1.1 Can be made:

- against the decisions of the Jury regarding monetary fines as per art. 224.11
- against the decision of the Jury to terminate a competition (art. 2035)
- against the recommendation of the Jury that a terminated competition should count for FIS points
- against the official result. This appeal has to be directed exclusively against an obvious and proved calculation mistake.

2057.1.2 Appeals must be submitted to the FIS Office.

2057.1.3 Time Limits

2036.1.3.1 Decisions of a competition jury are appealable to the respective Appeals Commission within 48 hours.

2057.1.3.2 The official results may be appealed to the Council via the FIS Office within 30 days for matters that are outside the competence of the jury.

2057.1.4 The decisions concerning appeals are taken by:

- the Appeals Commission
- the FIS Court.

2057.2 Postponing Effect

The evidence submitted (protest, appeal) may not cause a postponement of the appeal.

2057.3 Submission

All appeals must be in writing to be substantiated. Proof and evidence are to be included. Appeals submitted too late must be declined by the FIS.

2058 Homologation

All FIS Alpine Snowboard competitions have to take place on homologated courses. In special cases exceptions and deviations of the technical data and requirements can be approved by FIS or Competition Jury. (Art.

202.1.2.3 is not valid for Snowboard Halfpipe, Snowboard Cross and Snowboard Slopestyle.)

2070 Gate Judging

2070.1 Every gate judge receives a gate judge card with the following information

2070.1.1 Name of the gate judge

2070.1.2 Number(s) of the gate(s)

2070.1.3 Designation of the run (1st or 2nd / Qualification or Final)

2070.2 If a competitor does not pass a gate (or a gate dye mark) correctly according to art. 2070.4 the gate judge must mark the following immediately on the gate Judges card in the columns provided:

2070.2.1 The (bib) start number of the competitor.

2070.2.2 If the gate judge is responsible for more than one gate, then the gate number where the fault was made.

2070.2.3 The letter F (Fault).

2070.2.4 A drawing of the fault committed (sketch map – absolutely required).

2070.3 The gate judge must also watch that the competitor accepts no outside help (e.g. in the case of a fall). The slightest outside help will subject a competitor to being sanctioned. A fault of this nature must likewise be entered on the gate Judges card.

2070.4 Gate Passage

2070.4.1 A gate has been passed correctly when the competitor has at least the front foot fixed in the bindings on the board and the entire board crosses the gate line. In case of a fall, the competitor must pass through the turning gate line.

2070.4.2 The gate line in triangular banner Slalom, Parallel Slalom, Giant Slalom, Parallel Giant Slalom and Snowboard Cross is the extension of the line past the turning pole which connects the two points at the base of the banner.

2070.4.3 In the event that a competitor removes a pole from it's vertical position before the competitor's board and both feet have passed the gate line, the board and feet still must pass the original gate line (dye marking in the snow). In the event that a gate pole or stubbie is missing the competitor is obligated to turn around the original placement mark to be considered as having passed the gate correctly.

2070.4.4 Interdiction to Continue after a Gate Fault

If a competitor misses a gate and does not go back to pass it correctly, they no longer have the right to pass through further gates.

If a competitor fails to comply with this prohibition, they can be sanctioned by the Jury, which sanction may include disqualification and / or a monetary fine.

It will be presumed that a competitor was aware of his fault if he passed two or more gates incorrectly and obviously deviated from one of the possible correct passages gate lines.

2071 Gate Judges

2070.1 Every gate judge receives a check card with the following notations

2070.1.1 Name of the gate judge

2070.1.2 Number(s) of the gate(s)

2070.1.3 Designation of the run (1st or 2nd / Qualification or Final)

2071.1 Each gate judge must have a thorough knowledge of the competition rules and must follow instructions of the Jury.

2071.2 It can happen that despite close observation of the competitions, a competent gate judge does not recognise, a fault committed by a competitor or judges a fault in error.
When an adjacent gate judge, a member of the Jury or an official video controller makes a report concerning a competitor which differs from the notes of the gate judge in question, the Jury will freely interpret these notes in view of a possible sanctioning of a competitor or of a decision concerning a protest.

2071.3 The decision handed down by the gate judge must be clear and non partisan. His conduct must be calm, watchful and prudent. In case of doubt, the gate judge should hold to the principle, “give the benefit of the doubt to the competitor”.

2071.4 The gate judge must declare a fault only when he is convinced that a fault has been committed. In case of a protest, he must be able to explain clearly and definitively how the fault was committed.

2071.4.1 If the gate judge is in doubt whether a fault has occurred, he can consult the adjacent gate judge in order to confirm their notes. He can even request via a member of the Jury that the competition be briefly interrupted, so that the tracks on the course may be checked.

2071.4.2 The opinions of the public cannot be allowed to influence their judgment. Likewise he may not accept the opinions of witnesses, even though they may be experienced ones. Gate judges must form their own opinion.

2071.5 In slalom, parallel slalom, giant slalom, parallel giant slalom and Snowboard Cross the responsibility of the gate judge begins with the approaching of the competitor to the first gate he controls and ends when the competitor has passed through the last gate under their jurisdiction.

2072 Responsibility to the Competitor

2072.1 A competitor may in the case of an error or a fall, question the gate judge. The gate judge, where possible, must inform a competitor if he has committed a fault that would lead to a sanction / disqualification.

2072.2 In either case with a clear, decisive voice, the gate judge answers the competitor's question or informs him with one of the following words:

2072.2.1 »Go!» if the competitor should expect no sanction / disqualification, since the gate judge has determined that the gate passage was correct;

2072.2.2 »Back!» if the competitor may expect a sanction / disqualification.

2072.3 In principle the gate judge speaks these words in the language of the host country. The competitor should learn these expressions and it might be useful to announce them at a team captains' meeting.

2072.3.1 The competitors themselves are fully responsible for their actions and in this respect they cannot hold the gate judge liable.

2073 Immediate Announcement of Sanctions / Disqualifying Faults

2073.1 Particularly in slalom, giant slalom, Snowboard Cross (or in parallel competitions) the gate judge can immediately signal a disqualifying fault.

2073.2 The immediate indication of a disqualifying fault can be made in the following ways:

2073.2.1 In good visibility by raising a flag of a particular color.

2073.2.2 In bad visibility or fog, by a sound signal.

2073.2.3 By other means as provided by the organisers and approved by the Jury.

2073.3 The immediate announcement does not relieve the gate judge from recording all incidents on his gate judge card.

2073.4 The gate judge is required to make himself available to the Jury and provide information to the jury members as requested.

2074 Duties of the Gate Judge at Completion of each run

2074.1 In accordance with the instructions given by the Jury, the Chief Gate Judge (or his assistant) collects all the gate judge cards. He then passes them on to the Referee.

2074.2 At the conclusion of the 1st run, the Chief Gate Judge distributes the gate judge cards for the 2nd run.

2075 Duties of the Gate Judge at the Conclusion of the Competition

2075.1 Each gate judge who has recorded a disqualifying / sanction fault or who has been witness to an incident leading to a provisional re-run must be available to the Jury until after the settlement of any protests.

2075.2 It is the responsibility of the Technical Delegate to dismiss a gate judge who is waiting to be called by the Jury.

2076 Supplemental Duties of the Gate Judge

2076.1 After the necessary entries have been made in their gate judge card, the gate judge must shift immediately to his other duties. Most frequently he must do the following

2076.1.1 Replace gate poles vertically (a leaning pole can aid or hinder a competitor).

2076.1.2 Replace knocked out poles in their exact positions, the position is marked by the dye in the snow.

2076.1.3 Torn or missing flags should, wherever, possible be replaced. The flags must always be placed at the bottom of the poles.

2076.1.4 Replace broken gate poles according to colour (blue or red), the pieces of broken poles must be stored in a way that will not endanger competitors or spectators.

2076.1.5 Maintain and repair his section of the course.

2076.1.6 Keep the course clear.

2076.1.7 Remove or try to repair any markings made on the course by competitors or third parties.

2076.2 If no control personnel have been designated for his section of the course, the gate judge must take care that all persons (spectators, photographers, other competitors, etc.) maintain sufficient distance from the competition course, so that competitor(s) will not be hindered in any way during heir run.

2076.2.1 The gate judge, in accordance with orders from the Jury must direct accredited persons to the most favorable places where they can do their work and maintain course security without hindering the competitors.

2076.3 The gate judge must watch that the instructions issued by the Jury are adhered to (training opportunities, approved kinds of training, inspections, time schedules etc.).

2076.4 If a competitor is hindered during his run, he must immediately leave the competition course and report this to the nearest gate judge. The gate judge must enter the circumstances of the incident on his gate judge card and have this available for the Jury at the end of the 1st or 2nd run. The gate judge must request the competitor in question to report immediately to the Referee or another Jury member.

2077 Location of the Gate Judge

2077.1 The gate judge must choose or be placed in an isolated secure location. They must be placed so that they can properly observe the terrain or the gates and course sections which they oversee, near enough to be able to take prompt action, but distant enough not to hinder security or the competitors. The gate poles and gates must be clearly visible to the competitor at all times.

2077.2 The organisers are obligated to provide the gate judges with supplies for carrying out their assigned duties. Clothing and identification bibs worn by gate judges should not be of such a color as to be confused with a gate

flag. It is recommended that for identification purposes gate judges should be issued and wear bibs.

2078 Number of Gate Judges

2078.1 The organiser is responsible for having a sufficient number of competent gate judges available. The organiser may have them assembled, if necessary, for final instructions in the presence of the Chief Gate Judge. If needed, the TD can participate in this session.

2078.2 The organiser must inform the Jury of the number of gate Judges available for the training and particularly for competition.

2079 Support of the Gate Judges

2079.1 The gate judge should be in their position well before the start of the competition. Their work could last several hours and may be subject to varying atmospheric conditions. It is advisable for the organisers to provide, if possible, the gate judges with protective clothing .

2079.2 The organiser should supply a number of replacement gate judges who could replace gate judges during a competition (or for the second run) should there appear to be any need for replacement.

2079.3 The organiser should endeavor to provide the gate judges with some form of nourishment at their positions.

2079.4 At particularly difficult places where poles are often knocked down or broken, it is advisable that an assistant be assigned to help the gate judge.

2079.5 The equipment necessary for the proper fulfilment of the gate judge's functions must be anticipated and put at heir disposal. In particular:

2079.5.1 A special plastic cover for the gate judge card to protect it against snow and water.

2079.5.2 A pencil, if possible attached to the cover by a string along with extra pencils and a few sheets of blank paper to note any incidents.

2079.5.3 The necessary tools to work on keeping the course in proper condition: shovel, rake, crow bar, drill, wedges, etc.

2079.5.4 Enough replacement poles of the right colours. These replacement poles must be stored and placed far enough from the course so as to not confuse the competitors. The replacement poles should be planted obliquely in the snow, pointed ends down so as not to be a security issue and, if possible, with a banner or flag already attached.

2079.5.5 In the case of Snowboard Cross all section control gate judges must be equipped with radios to ensure communication to the Chief of Finish during the entire competition.

2080 Video Control

When the organiser has the technical installation for an official video control, the Jury will appoint an official video controller. The duties of the Vid-

eo Controller are to observe the competitors passage on the course. For SBX and Parallel events, the official video controller can make final decisions about disqualifications / sanctions.

2085 Gate flags

2085.1 Triangular gate flags (banners / panels) may be used with the following sizes. (Slight variations from the following dimensions will be acceptable).

	PSL/SL	PGS/GS/SBX/SBS
Base length:	100 cm	130 cm
Height long side:	80 cm	110 cm
Height short side:	45 cm	45 cm

2085.2 At all competition levels it is allowed to use PGS/GS gate flags for PSL/SL.

On OWG, WSC, WC, YOG and WJC events PGS size gate flags should be used for any PAR and SBX competitions.

2085.3 The gate flags have to be placed at right angle (90°) to the fall line at the bottom of the gate. The gate flags are to be fastened at the bottom of the gate.

2085.4 The gate flags must be the same color as the stubby pole and long outside pole (red or blue).

2085.5 The gate flag must be of wind-permeable material.

2085.6 Advertising on gate flags should not reduce wind permeability or the release mechanism of the flags.

2089 Poles

All poles used in the Alpine disciplines and Snowboard Cross are subdivided into rigid poles and flex poles.

2089.1 Rigid Poles

Round, uniform poles with a diameter between a minimum of 20 mm and a maximum of 32 mm and without joints are allowed as rigid poles. They must be of such a length that, when set, they project at least 1.80 m out of the snow and they must be made of a non-splintering material (polycarbonate plastic or material with similar properties).

2089.2 Flex Poles

Flex-poles are fitted with a spring loaded hinge. They must conform to the FIS specifications.

2089.2.1 Stubby Poles

Stubby flex poles are flex poles or flex material with a length of not more than *45* cm above the bottom of hinge to the top end of the pole and padded or hollow on the top.

- Soft padding (approximately) 35 cm
- Base length (approximately) 25 cm

2089.3 **Use of Flex Poles**

Flex-poles must be used for all Alpine Snowboard competitions in the International Ski Calendar. In Giant Slalom a rigid pole may be used for the outside pole of the gate. For SBX and SBS both types can be used.

2089.3.1 *Slalom and Parallel Slalom*

The slalom poles are colored red or blue and must carry a triangular banner of the matching color. The turning pole must be a stubbie flex pole with a screw in bottom. The outside pole is a normal flex-pole.

2089.3.2 *Giant Slalom and Parallel Giant Slalom*

In these events, the gate is made up of one slalom pole and one stubbie pole with a triangular banner. The inside turning pole must be a stubbie flex pole. The outside pole can be a flex-pole or a solid one (in windy conditions).

2089.3.4 *Snowboard Cross*

In this event, the gate is made up of one slalom pole and one stubbie flex pole with a triangular banner. The inside turning pole must be a stubbie flex pole. The outside pole can be a flex-pole or a solid one (in windy conditions).

2090 Competitors Equipment

2090.1 **Snowboards**

Only Snowboards can be used in competitions. The boards minimal width is restricted as follows:

Gliding surface length.	Minimal width:
up to 135 cm	14 cm
more than 135 cm	16 cm

2090.2 **Bindings**

The bindings must be fixed diagonally on the long axis of the board. The boots cannot overlap each other.

2090.2.1 Plate Systems that connect both bindings are not allowed in SBX (individual plate systems are allowed on each binding)

2090.3 Retention devices, leashes

Safety leashes are optional unless required by the organiser or the ski area.

2090.4 **Balance and Speed control**

The competitors are not allowed to wear anything on the hands besides gloves or to use any kind of devices to additionally support their balance, reduce or accelerate their speed, like poles or sticks etc. Back support may be worn by competitors so long as such equipment does not offer an aerodynamic advantage.

Particular Rules for the different Disciplines

2100 SLALOM

2101 Technical Data

2101.1 Vertical Drop

2101.1.1 Courses for all races: must be a minimum of 120 meters and a maximum of 180 meters in vertical drop. The same course may be used for men and ladies.

2101.2 Length

2101.2.1 The course should have a length on the ground of a minimum of 400 meters and a maximum of 600 meters. The length of the course must be measured with either a measuring tape, wheel or GPS and has to be published on the start list and the results.

2101.3 Width

2101.3.1 The course must be at least 30 m wide, if two runs are set on the same slope. In special cases the inspector or Jury can authorize exceptions for short parts of the course. If the 2nd run is reset on the first track the minimum width is 20 m.

2101.4 Gates

2101.4.1 A slalom gate consists of one stubby flex pole (turning pole) and one long slalom flex pole (outside pole) which are connected with a triangular gate flag (see also art. 2085 and 2089).

2101.4.2 Consecutive gates must alternate in color.

2101.4.3 The distance between turning poles must be between 10 and 14 meters. The distance between turning poles of a banana in a combination must be between 6 and 8 meters.

2101.4.4 The triangular gate flags have to be placed at right angles (90°) to the fall line at the bottom of the gate. The triangular gate flags are to be fastened at the bottom of the gate.

2101.5 Number of gates

Minimum: 35 gates
Maximum: 55 gates

2102 The Courses

2102.1 General Characteristics of the Course

2102.1.1 The ideal slalom course, taking into consideration the drop and the gradient specified above, must include a series of turns designed to allow the competitors to combine maximum speed with neat execution and precision of turns. Course should be symmetrical and not favor goofy or regular competitors.

2102.1.2 The slalom should permit the rapid completion of all turns. The course should not require acrobatics incompatible with normal technique. It should be a technically clever composition of figures suited to the terrain, linked by single and multiple gates, allowing a fluent run, but testing the widest variety of Snowboard technique, including changes of direction with different radius. Gates should never be set only down the fall-line, but so that some full turns are required, interspersed with traverses

2102.1.3 Preparation of the Course

Slalom competitions must be raced on a hard prepared snow surface. If snow falls during the competition, the Chief of Course must ensure that it is packed or, if possible, removed from the course.

2103 Course Setting

2103.1 Course Setters

2103.1.1 Inspection of the Slalom Slope

This inspection must be carried out by the Course Setter before they sets the course. The slalom should correspond to the average ability of the first 30 competitors.

2103.3 Setting

In setting a slalom the following principles should be observed:

- Avoidance of monotonous series of standardized combinations of gates
- Gates, which impose on competitors sudden or sharp braking, should be avoided, as they spoil the fluency of the run without increasing the difficulties a modern slalom should have.
- It is advisable before difficult combinations of gates to set at least one gate which allows the competitor to ride through the difficult combination under control.
- It is not advisable to set difficult figures either right at the beginning or end of the course. The last gates should be rather fast, so that the competitor passes the finish at a good speed.
- The last gate should not be too near to the finish, inorder to maintain the security of the competitors and timekeepers. It should direct competitors to the middle of the finish line.
- The slalom poles should be drilled or rammed in by the Chief of Course or his designated assistants immediately after they have been set, so that the course setter can supervise the operation.

2103.4 Checking the Slalom Course

The Jury must check that the course is ready for inspection and / or competition once the course setter has set it, paying special attention that:

- The slalom poles are firmly rammed in.
- The gates are in the right color order.
- The position of the poles is marked.
- The numbers are in the right order on the outside poles.
- The poles are high enough above the snow.
- The two slalom courses are far enough from each other to avoid mis leading the competitors.
- The fencing of each course is far enough from the slalom poles.
- Obstacles at the edge of the course are either removed or neutralized.
- The last gate before the finish directs the competitors to the middle of the finish.
- The reserve poles are correctly placed not to mislead the competitors.
- Start and finish are in accordance with art. 2022 and art. 2025.

2104 Inspection of the Course

2104.1 The course must be in final competition conditions from the time the competitors' inspection starts and the competitors must not be disturbed during the inspection by workers on the course. The Jury decides the method of the inspection. Competitors must carry their start numbers. They may not ride down the prepared course or through the gates. They are not permitted to enter the course on foot without being attached to their board. Competitors are not allowed to "shadow ride" the course. Competitors are not allowed to touch (hold) the gates during inspection. First offense is penalized by a warning sanction and the, second offense can include a disqualification sanction from the competition.

2104.2 It is absolutely essential to have a prepared practice (warm-up) slope available for competitors near the competition venue.

2105 Start

2105.1 Start Intervals

The start takes place at irregular intervals in slalom. The Chief of Timing and Calculation or his special assistant tells the starter when each competitor should start. A competitor on course needs not to be through the finish line before the next competitor can start.

2105.2 Starting Order

2105.2.1 In the first run according to the start numbers. Starting numbers are distributed according to the ranking lists or by a manual random draw.

2105.2.2 For the second run see art. 2031.7.

2105.3 Start Signal

As soon as the starter has received the order for the next start, hey gives the competitor he warning “Attention, Achtung, Ready” and a few seconds later the start signal “Go! – Partez! – Los!”

The start time is valid if it occurs within the following limits: 5 seconds before and 5 seconds after the official start time. A competitor who does not start within that space of time will be sanctioned / disqualified.

2105.3.1 A competitor who has not appeared at the start 1 minute after being called by the official, will be sanctioned / disqualified unless they were late due to "force majeure". Advanced start times caused by the non-arrival of proceeding competitors have to be taken into account. The Start Referee may, however, approve a delay which, in his opinion, is due to “force majeure”. In doubtful cases he may allow in concert with the Jury the competitor a provisional start.

2105.3.2 Push off posts will be installed on the starting installation for all events. The specifications will adjusted to the needs of the specific events.

2106 Execution of the Slalom

2106.1 Two runs

A Slalom must always be decided by two runs on two different courses. Both courses must be used one after the other, in the order decided by the Jury. Division of the competitors into two groups starting simultaneously on both courses is not allowed. Whenever possible, both runs should be held on the same day.

2106.2 Limitations in the Second Run

The top 15 female and the top 25 male finishers of the first run are qualified for the second run. At Continental Cup and lower level competitions the Jury may allow 45 men and 25 ladies to start in the second run if time permits. This must be announced no less than 1 hour before the start of the first run.
The top 15 ladies and the top 15 men will start in the reversed order of their first run’s result. The remaining competitors will start in order of their results of the first run.

2106.3 Video and Film Control

At all International Ski Calendar races, a video or film control is recommended.

2107 Competition Clothing

Slalom competition suits must be two piece – pants and separate top. Form fitting speed or downhill suits are not permitted. Non protruding body protection and padding is recommended.
Protective equipment i.e. back protection must be worn on the body. No straps, fastening devices or other methods can be used to tighten the suit material closer to the body. Shin guards are excluded from this rule.

Protective equipment i.e. back protection must be worn on the body. No straps, fastening devices or other methods can be used to tighten the suit material closer to the body. Shin guards are excluded from this rule.

2200 GIANT SLALOM

2201 Technical Data

2201.1 Vertical Drop

2201.1.1 Courses must have a minimum vertical drop of 200 meters and a maximum vertical drop of 400 meters. The same course may be used for men and ladies.

2201.2 Length

2201.2.1 The length of the course must be measured with either a measuring tape, wheel or GPS and has to be published on the start list and the results.

2201.3 Width

2201.3.1 The course must be at least 30 meters wide. If two runs are set on the same slope (ladies and men) the course must be at least 40 meters wide. In special cases the inspector or Jury can authorize exceptions for short parts of the course.

2201.4 Gates

2201.4.1 A giant slalom gate consists of one stubby flex pole (turning pole) and one long slalom pole (outside pole) which are connected with a triangular gate flag (see also art. 2085 and 2089).

2201.4.2 Consecutive gates must alternate in color except banana gates which must be the same color gates and flags.

2201.4.3 The distance between the nearest poles of two successive gates must not be less than 10 meters. The gates must be set so that the competitors can distinguish them clearly and quickly even at high speed. The banner of a gate should be set at right angles to the racing line.

2201.4.4 The triangular gate flags have to be placed at right angles (90°) to the fall line at the bottom of the gate. The triangular gate flags are to be fastened at the bottom of the gate.

2201.5 Number of gates

The Giant Slalom has to be set as follows:
It is recommended to set with a distance of between 20–27 meters between turning gates in Giant Slalom (Exception: Banana Gates). The results list should show the number # of turns and number # of gates. Example: 25 (turns) / 30 (gates).

2202 The Courses

2202.1 General Characteristics of the Courses

The terrain should preferably be undulating and hilly. The course must be at least 40 m wide.
The inspector authorised to homologate the course decides whether this minimum width is adequate and if necessary can order it to be widened. In exceptional cases as determined by the inspector or TD the course may be less than 40 m wide.

2202.2 Preparation of the Course

The track must be closed to the public at least 20 (twenty) hours before the competition. The track must be as flat as possible from one side to the other. The snow must be compacted to provide a hard competition surface. The use of artificial means of preparation is permitted (salt, water, etc.). In critical places the Organising Committee may be require to install security (mattresses, pads, nets etc.) as prescribed in the homologation report or as requested by the Jury.

2203 Course Setting

2203.1 Setting

In setting a giant slalom the following principles should be observed:

2203.1.1 The first run should be set the day before the competition. Both runs can be set on the same course but the second run must be re-set.

2203.1.2 The skillful use of the terrain when setting a giant slalom is, in most cases, even more important than for a slalom, since figures play a less important role owing to the prescribed width of the gates and the greater distances between them. It is therefore better to set mainly single gates, while exploiting the terrain to the utmost. Figures can be set, but mainly on uninteresting terrain.

2203.1.3 A Giant Slalom should present a variety of long, medium and small turns. The competitor should be free to choose his own line between the gates, which must not be set down the fall-line of the slope. The full width of a hill should be used wherever possible. Courses should be set “symmetrically” so as not to favor goofy or regular competitors.

2204 Inspection of the Course

2204.1 The course will remain closed for training on the day of competition. The course and gates must be in final condition at least one hour before the start of competition inspection.
The competitors are allowed to study the course after its final setting, by slowly sliding down alongside the course or side slipping through the course as directed by the Jury. Boarding through gates, or practicing turns parallel with those required by gates on the course, will lead to sanctions or disqualification. Competitors must carry visible their start numbers.

Competitors are not allowed to touch (hold) the gates during inspection. First offence is a warning sanction, second offense can include a disqualification sanction.

2204.2 It is absolutely essential to have a prepared practice (warm-up) slope near the competition venue.

2205 Start

2205.1 Start area

Push off posts will be installed on the starting installation for all competitions. The specifications will adjusted to the needs of the specific events.

2205.2 Starting Order

In the first run according to the start numbers. Starting numbers are distributed according to the ranking lists, or by a manual random draw (art. 2031 and art. 2032).

2205.3 Limitation for the second runs

The top 15 female and the top 25 male finishers from the first run are qualified for the second run. At Continental Cup and lower level competitions the jury may however allow 45 men and 25 ladies to start in the second run if time permits. This must be announced no less than 1 hour before the start of the first run. At Continental Cup and lower level competitions the jury may allow 45 men and 25 ladies to start in the second run if time permits. This must be announced no less than 1 hour before the start of the first run.

The top 15 ladies respectively the top 15 men will start in reverse order of their first run result. The remaining competitors will start in order of their position in the first run (see also 2031.7).

2206 Execution of the Giant Slalom

A giant slalom must always be decided by two runs. The second run may be held on the same slope, but the gates must be reset. Whenever possible, both runs should be held on the same day.

2206.1 Video and Film Control

At all International Ski Calendar races, a video or film control is recommended.

2207 Competiton Clothing

Giant Slalom competition suits must be two piece – pants and separate top. Form fitting speed or downhill suits are not permitted. Non protruding body protection and padding is recommended. Protective equipment i.e. back protection must be worn on the body. No straps, fastening devices or other methods can be used to tighten the suit material closer to the body. Shin guards are excluded from this rule

2400 Triple Slalom Event, (TSL)

2401 Definition

A Triple-S is a competition where three competitors ride simultaneously side by side down three parallel courses. The setting of the courses, the configuration of the terrain and the preparation of the snow are to be as identical as possible.

2402 Technical Data

For Course Specifications TSL see also 2502 for Parallel events

2402.1 Technical Data Triple-S

For the Triple - S Slalom courses are used. The vertical drop of the course must be between 80 and 120 meters with a minimum of 18 gates. It is recommended to set around 25 gates in TSL with a horizontal distance (turning pole to turning pole) of between 10-14 meters.
The course should have a length on the ground of a minimum of 250 meters and a maximum of 450 meters – recommended length is approximately 350 meters. In general the courses should be between 17° to 22° in average steepness for TSL and a minimum width of 40 meters.

2402.3 Gates

2402.3.1 see 2502.3.1 for Parallel events

2402.3.2 see 2502.3.3 for Parallel events

2403 Choice and Preparation of the Course

2403.1 Choose a slope wide enough to permit three courses, preferably slightly concave (permitting a view of the whole course from any point). The terrain variations must be the same across the surface of the slope. The course layouts must have the same profile and the same difficulties.

2403.2 Over the full width of the chosen slope, the snow must be consistently hard, similar to course preparation for slalom, so that it is possible to offer equal competition conditions on all three courses.

2403.3 There must be a lift available to the course to ensure that the races are run smoothly and rapidly.

2403.4 The course must be entirely closed off by barriers. It is recommended to fence off reserved places intended for trainers, competitors and servicemen.

2404 The Courses

2404.1 When the three courses are set, the left course (looking from the top) will be set with red poles and red triangular gate flags, the middle course (looking from the top) will be set with blue poles and blue triangular gate flags and the right course (looking from the top) will be set with yellow poles and yellow triangular gate flags. If yellow poles and yellow flags are not available the right course (looking down) maybe set with red poles and red flags.

2404.2 The same course setter establishes the courses and makes sure they are identical and parallel. He must ensure that the course flow is smooth and that there is variety in the curves (very pronounced curves) and that the course causes rhythm changes. In no case should this event resemble a long straight run from top to bottom.
It is permitted to set double and triple combinations.
The recommended number of gates is approximately 23 - 30.

2404.4 Shortly before the finish line, after the last gate, the separation between the three tracks must be well defined so that they direct each competitor towards the finish line. The course setter must place the last gate in such a manner that the competitors are guided towards the center of each finish line.

2404.5 Distance Between the Three Courses
The equidistance between three corresponding course markers (from turning pole to turning pole) must be for:8 to 10 m
The first gate (all three courses) should be set the same distance apart as the start gates.

2405 Start

2405.1 Start Ramp

See 2505.1 for Parallel events

2405.2 Start Gates

The gates have to open simultaneously for all three runs and a competitor must not be able to push the gates open.

2405.3 False Starts

Disqualification will take place:
- When a competitor manipulates the starting gates
- When a competitor's board (body counts if a western style start gate is used) passes the starting line (vertical plane) before the final starting signal has been given (audible and/or visible)

2405.4 Malfunction of the start gate

If one, two or three starting machine gates have clearly been blocked because of technical malfunction, without the competitor touching the gate before the starting signal was given, the start must be repeated.

2405.5 Start command

Before the starter gives the command – “Go" or a single audible signal, he must first ensure that the competitors are ready by asking: “red course ready, blue course ready, yellow course ready, attention”.
“Riders ready” only can be used in connection with an audible command (series of short beeps followed by one louder starting beep when doors open).

2406 Finish, see article 2506 for Parallel events

2407 Course Setting, see article 2507 for Parallel events

2408 Timing

2408.1 Qualification

The running time of each competitor will be registered with three independently homologated timing systems (see also art. 2020.2, art. 2020.3).

2408.2 Finals

The running time of each competitor will be registered with three independently homologated timing systems (see also art. 2020.2, art. 2020.3). The use of a photo finish camera for higher level events should be compulsory.

2409 Execution of a Triple Slalom (TSL) event

2409.1 Qualification format for the Final

2409.1.1 Qualifying System

The three courses are set from the beginning. These courses are the same or similar to the finals courses.
This Qualification system consists of two runs:
In the Qualification run, all competitors are sorted according to their FIS points or Cup standings ranking. The competitors are seeded to the different courses according their ranking.
Bib number 1, 6, 7, 12, 13, 18, 19, 24, 25, etc on the red course, Bib number 2, 5, 8, 11, 14, 17, 20, 23, 26, etc on the blue course, Bib number 3, 4, 9, 10, 15, 16, 21, 22, 27, etc on the yellow course. A random draw will be made for the top 5 riders on each course. Each competitor has two timed run on the same course.
The best time one (1) run out of two timed runs determines the qualification ranking
The top 9 ranked women and men on the red, the top 9 ranked women and men on blue course and the top 9 ranked women and men on yellow course (27 women and 27 men) advance to the finals.

<u>Ranking:</u>
The competitors are ranked according to the best run out of two qualification runs.
Place 1 – 3, all 1st places of the different courses. Best time in the qualification will be 1st place, second best time 2nd place, third best time will be on 3rd place.

Place 4 – 6, all 2nd places of the different course, ranking according for 1st places.
Place 7 - till the end, according procedure above.

If there is a tie on the best time of the athletes, the tie will first be broken by the better second qualification time. If they are still tied the tie will be broken using the highest current World Cup Standings (at World Cup events) or current FIS points (at FIS/COC/WSC and OWG level events). If they are still tied all will receive the same rank but the competitor with the higher bib number will be ordered first. The exception is if they are tied for the 9th place (see 2509.1.2.3)

2409.1.2. *Tie-Breaking for place 9th*

In case of a tie for place 9 on one of the courses there shall be another run for each of the competitors involved on the respective course (same course for both). This run will take place immediately after the qualifications. The start order will be drawn at the start.

2409.2 Finals

2409.2.1 *Pairings for Finals*

9 runs per gender are formed as follows using the results of the Qualifications:

1 Round	
1	Place 1 - Place 18 – Place 27
2	Place 2 - Place 17 – Place 26
3	Place 3 - Place 16 - Place 25
4	Place 4 - Place 15 – Place 24
5	Place 5 - Place 14 – Place 23
6	Place 6 - Place 13 – Place 22
7	Place 7 - Place 12 – Place 21
8	Place 8 - Place 11 – Place 20
9.	Place 9 – Place 10 – Place 19

2. Round	
10	Winner 1 – Second 2 – Second 3
11	Winner 2 – Second 1 – Second 4
12	Winner 3 – Second 5 - Second 6
13	Winner 4 – Winner 9 - Second 7
14	Winner 5 – Winner 8 - Second 9
15	Winner 6 – Winner 7 - Second 8

3. Round	
16	Second 10 – Second 13 – Second 15
17	Second 11 – Second 12 – Second 14

4. Round	
18	Winner 10 – Winner 15 – Second place 16/17 best time in round 3
19	Winner 11 – Winner 14 – Winner 17
20	Winner 12 – Winner 13 - Winner 16

5.Round Finals	
21 for place 7 - 9	Third 18 – Third 19 – Third 20
22 for place 4 - 6	Second 18 – Second 19 – Second 20
23 for place 1 - 3	Winner 18 – Winner 19 - Winner 20

2409.2.2 Starting order

For each pairs the competitor which is listed first or respectively on top of the pairing will do his first run on the red course. The second listed athlete will do his run on the blue course. Following the order in the table, from top to bottom, all groups competition in succession.

2409.2.3 A Triple-S final consists of:

- Round 1, 27 athletes
- Round 2, 18 athletes
- Round 3, 6 athletes
- Round 4, 9 athletes
- Round 5, 9 athletes

2409.2.3.1 Round 1

The winners and the second placed athletes are going to round 2

2409.2.3.2 Round 2

The winners of round 2 are going to round 4. The second placed athletes are going to round 3.

2409.2.3.3 Round 3

The winners of round 3 are going to round 4. The best timed second placed athlete of this round goes to round 4.

2409.2.3.4 Round 4

The winners of round 4 are going to the big final (place 1- 3) the second placed athletes of this round are going to small final (place 4 – 6) the third ranked athletes are going to placing final (place 7-9).

2409.2.3.5 Round 5 Finals

The winner of the big final will be ranked 1st . The second of the big final will be ranked 2nd. The third of the big final will be ranked 3rd.
The winner of the small final will be ranked 4th . The second of the small final will be ranked 5th.The third of the small final will be ranked 6th.
The winner of the Placing final will be ranked 7th . The second of the placing final will be ranked 8th.The third of the placing final will be ranked 9th.

2409.2.4 Places 10 to 27 are determined by the ranking of the round where they've got eliminated.
2nd places are better ranked than third places. For the ranking in the respective groups the time of the round where they got eliminated will be taken in consideration. F.ex. all third place athletes of round 2 will be ranked on place 13th to place 18th according the run time of round 2.

2409.2.5 Did not start (DNS) in Final rounds
If a competitor does not start in the final rounds, ~~they~~ he will be automatically ranked in the last position of the respective round. If two or more competitors do not start, the (DNS) competitors will be ranked on the last places according to their qualification times or the time of the last round where they have been started. (and so on with three (3) or more DNS competitors).

2409.3 Inspection of the courses

2409.3.1 The competitors are allowed a minimum of 10 minutes to inspect the three courses (qualification and finals). The method of inspection is determined by the Jury.

2410 Control of the Races, see article 2510 for Parallel events

2411 Disqualifications / Sanctions

2411 .1 Causes for disqualifications are the following:
- false start (art. 2505.3)
- disturbing opponent, voluntarily or not at the final rounds
- incorrect gate passage
- turn not executed on the outside of a gate
- not finishing the run with at least one foot fixed to the board.

2411 .2 If a rider disturbs his opponent during the qualification run, the disturbed rider may get a re-run. The run of rider who disturbs the opponent will count finally

2411.2.1 If a competitor is disturbed at the final rounds by an opponent there will be no re-run. If two competitors are disturbed, there will be a re-run with these two athletes.

2411.2.2 In case two competitors do not finish, the competitor that passes the most gates will be ranked on second place of this round. If all 3 competitors do not finish, the run will be started new. If a competitor misses a gate, it is forbidden to re-enter the course.

2412 Final ranking

The competitors will be ranked according their position, determined by the place and time in the respective round, from place 1 – 27. All other athletes will be ranked according their best qualification time. There will be no tie breaking in the final ranking. Tied competitors will receive the same place and get the same points. The athlete with the higher bib number will be listed first

2413 Competiton Clothing

Triple-S competition suits must be two piece – pants and separate top. Form fitting speed or downhill suits are not permitted. Non protruding body protection and padding is recommended. Protective equipment i.e. back protection must be worn on the body. No straps, fastening devices or other

methods can be used to tighten the suit material closer to the body. Shin guards are excluded from this rule

2500 PARALLEL EVENTS

2501 Definition

A parallel is a competition where two competitors ride simultaneously side by side down two parallel courses. The setting of the courses, the configuration of the terrain and the preparation of the snow are to be as identical as possible.

2502 Technical Data

2502.1 Technical Data Parallel Slalom

For Parallel Slalom (PSL) the vertical drop of the course must be between 80 and 120 meters with a minimum of 18 gates. It is recommended to set around 25 gates in PSL with a horizontal distance (turning pole to turning pole) of between 10–14 meters.
The course should have a length on the ground of a minimum of 250 meters and a maximum of 450 meters – recommended length is approximately 350 meters. In general the courses should be 16 (+/- 2,0 °) in average steepness for PSL with a minimum width of 30 meters.
Course length and vertical drop should be proportional to each other.

2502.2 Technical Data Parallel Giant Slalom

For Parallel Giant Slalom (PGS) the vertical drop of the course must be between 120 and 200 meters with a minimum of 18 gates. It is recommended to set around 25 gates in PGS with a horizontal distance (turning pole to turning pole) of between 20–27 meters.
The course should have a length on the ground of a minimum of 400 meters and a maximum of 700 meters – recommended length is approximately 550 meters. In general the courses should be 16 (+/- 2,0 °) in average steepness for PGS with a minimum width of 40 meters.
Course length and vertical drop should be proportional to each other.

2502.3 Gates

2502.3.1 A PSL/PGS gate consists of one stubby flex pole (turning pole) and one long slalom pole (outside pole) which are connected with a triangular gate flag (see also art. 2085 and 2089).

2502.3.2 The distance between the nearest poles of two successive gates (banana gates only in PGS) must not be less than 10 meters and set with the same color gates and flags. The gates must be set so that the competitors can distinguish them clearly and quickly even at high speed. The banner of a gate should be set at right angles to the racing line.

2502.3.3 The triangular gate flags have to be placed at right angles (90°) to the fall line at the bottom of the gate. The triangular gate flags are to be fastened at the bottom of the gate.

Code	Parallel Events Criteria	Measurement
CL (m)	Course Length (proportional to VD)	
	PGS Parallel Giant Slalom	400,0 m - 700,0 m
	PSL Parallel Slalom	250,0 m - 450,0 m
VD (m)	Vertical Drop (proportional to CL)	
	PGS Parallel Giant Slalom	120,0 m - 200,0 m
	PSL Parallel Slalom	80,0 m - 120,0 m
CA (°)	Course Angle (average)	16,0° (+/- 2,0°)
	CL and VD should be proportional to each other	
	f.ex. Long course / high VD, Short course / low VD	
SW (m)	Slope Width	
	PGS Parallel Giant Slalom	min. 40,0 m
	PSL Parallel Slalom	min. 30,0 m
	Pro-jumps are possible	
	Exceptions are possible for in-city and ramp competi-tions	
	Start Criterias	
SA (m)	Start Area	Length 10,0 m
		Width 30,0 m
SP (m)	Start Platform	Length min. 6,0 m
	Width: depending on the startgate	Width 12,0 m (+/- 4,0 m)
	Inclination to get speed	
SD (m)	Distance between start gates	min. 6,0 m
	Recommended: width of course set	
	Course Setting	
CD	Distance between courses	
	PGS Parallel Giant Slalom	9,0 m - 12,0 m
	PSL Parallel Slalom	8,0 m - 10,0 m
GD	Distance between Gates	
	PGS Parallel Giant Slalom	20,0 m - 27,0 m
	PSL Parallel Slalom	10,0 m - 14,0 m
	Finish Criterias	
FL (m)	Finish Line (width per course)	min. 8,0 m
FA (m)	Finish Area Length	60,0 m (at 0,0 °)
FW (m)	Finish Area Width	min. 30,0 m
	Competition Level	
Level A	OWG, WSC, WJC, WC, YOG	
Level B	COC, UVS	
Level C	NC, FIS, EYOF, JUN	

2503 Choice and Preparation of the Course

2503.1 Choose a slope wide enough to permit two or more courses, preferably slightly concave (permitting a view of the whole course from any point). The terrain variations must be the same across the surface of the slope. The course layouts must have the same profile and the same difficulties.

2503.2 Over the full width of the chosen slope, the snow must be consistently hard, similar to course preparation for slalom, so that it is possible to offer equal competition conditions on both courses.

2503.3 There must be a lift available to the course to ensure that the races are run smoothly and rapidly.

2503.4 The course must be entirely closed off by barriers. It is recommended to fence off reserved places intended for trainers, competitors and servicemen.

2504 The Courses

2504.1 When the two courses are set, the left course (looking from the top) will be set with red poles and red triangular gate flags and the right course (looking from the top) will be set with blue poles and blue triangular gate flags.

2504.2 The same course setter establishes the courses and makes sure they are identical and parallel. He must ensure that the course flow is smooth and that there is variety in the curves (very pronounced curves) and that the course causes rhythm changes. In no case should this event resemble a long straight run from top to bottom.
It is permitted to set double and triple combinations.
The recommended number of gates is approximately 23 – 30 for PSL and 18 – 25 for PGS.

2504.3 Shortly before the finish line, after the last gate, the separation between the two tracks must be well defined so that they direct each competitor towards the finish line. The course setter must place the last gate in such a manner that the competitors are guided towards the center of each finish line.

2504.4 *Distance between the two Courses*
The equidistance between two corresponding course markers (from turning pole to turning pole) must be for: PSL 8 to 10 m
PGS 9 to 12 m.
The first gate (red and blue course) should be set the same distance apart as the start gates.

2505 Start

2505.1 Start Ramp
The Start Ramp shall be prepared in such a way that the competitors can stand relaxed on the starting line and can quickly reach full speed after leaving the start. Push off posts will be installed on the starting installation for all events. The specifications will adjusted to the needs of the specific events.

2505.2 Start Gates

Two different procedures to start with different start gates are possible:

- Simultaneously
  the gates have to open simultaneously for both runs and a competitor must not be able to push the gates open.
- Delayed
  the gates have to open simultaneously in the first run. In the second run the start gates open with the time difference of the first run. Competitor must not be able to push the gates open.

2505.3 False Starts

Disqualification will take place:
When a competitor manipulates the starting gates

When a competitor's board (entire body counts if a western style start gate is used) passes the starting line (vertical plane) before the final starting signal has been given (audible and/or visible)

2505.4 Malfunction of the start gate

If one or both starting machine gates have clearly been blocked because of technical malfunction, without the competitor touching the gate before the starting signal was given, the start must be repeated.

2505.5 Start command

Before the starter gives the command – "Go" or a single audible signal, he must first ensure that the competitors are ready by asking: "red course ready, blue course ready, "yellow course ready" attention".
"Riders ready" only can be used in connection with an audible command (series of short beeps followed by one louder starting beep when doors open).

2506 Finish

2506.1 The finish areas must be symmetrical. The line of the finish must be parallel with the line of the starts (see also art. 2025).

2506.2 Each finish line is marked by two/three vertical banners or inflatables in vertical style. Each of these must be at least 8 m wide. The finish lines are separated by a vertical banner or inflatable with a maximum width of approximate one meter.

2506.3 It is necessary to set up visually separate finish approaches and exits.

2507 Course Setting

2507.1 Course setters

The course setter is designated by the Jury of the competition (if he is not chosen by the FIS). Before setting the course, he must conduct an inspection and study of the course in the presence of the Jury and those responsible for the course (the chief of competition and the chief of course).

2507.2 *Setting*

- Gates, which impose on competitors a sudden sharp braking action, should be avoided, as they spoil the fluid aspect of the run without increasing the difficulties of a modern course.
- It is advisable before difficult combinations of gates to set at least one gate which allows the competitor to ride through the difficult combination under control.
- It is not advisable to set difficult figures either right at the beginning or end of the course. The last gates should be rather fast, so that the competitor passes the finish at a direct good speed.
- The last gate should not be too near to the finish to avoid danger to competitors and timekeepers. The last gate should direct competitors to the middle of the finish line.
- The slalom poles should be drilled or rammed in by the Chief of Course or his assistants immediately after they have been set, so that the course setter can supervise the operation.

2507.3 *Checking the Courses*

The Jury must check that the course is ready for racing once the course setter has set it, paying special attention that:

- That all poles are firmly rammed in.
- The gates are in the right color order.
- The position of the poles is marked.
- The numbers are in the right order on the outside poles.
- The poles are high enough above the snow.
- The gate flags are properly fixed.
- The security fencing and other security installations are acceptable.
- The last gate before the finish directs the competitors to the middle of the finish.
- The reserve poles are correctly placed not to mislead the competitors.
- Start and finish are in accordance with art. 2022 and art. 2025.

2508 Timing and Data

The Organiser must provide a Timing and Data System which is able to fulfill following: use existing FIS Lists and CoC Standing lists, as well as finding out which ones the riders best points the Data System must provide the possibility to calculate start lists, results from qualification and elimination runs, as well as final results including the CoC points and FIS points achieved.

2508.1 Qualification

The running time of each competitor will be registered with two independently homologated timing systems (see also art. 2020.2, art. 2020.3).

2508.2 Finals

As the start is simultaneous, only the difference in time between the competitors at the finish will be registered with two independent homologated timing systems. The first competitor that breaks one of the signals starts the chronometer and receives the time "zero", the following competitor (2nd) stops successively the clocks (chronometers) and receives the time difference in 1/100-seconds to the first competitor.

2509 Execution of Parallel Events

2509.1 Qualification formats for the Parallel Final

2509.1.1 Separate Qualifying run

2509.1.1.1 One Run Qualifying

A separate qualifying run has to be set. This run must be similar to the Parallel courses, i.e. number of gates, fall line, and inclination. All competitors get one run on this course. The top 16 men and ladies, will qualify for the parallel finals -in case there are less than 50 competitors, only 8 will take part in the parallel finals.

In FIS- and COC-level competitions a second qualification run is allowed (both times to be added).

2509.1.1.2 Two runs Qualifying

A separate qualifying run will be set (one course for ladies one for men – dependent upon the number of competitors the Jury may decide to utilize only one course). Whenever possible both runs should be held on the same day. This run must be similar to the Parallel courses, i.e. number of gates, fall line, and inclination. All competitors get one run on this course – the top 8 timed ladies and 8 men are qualified directly to the finals. Places 9-24 for the ladies and places 9-32 for the men have a second run on the same course but in reverse start order (place 9 starts first, place 24/32 starts last). Again the top 8 ladies and 8 men (only by the time from the second run) are qualified for the finals.

2509.1.1.3 Tie-Breaking in separate Qualification

In case of a tie for place 8 in the first qualifying run or place 16 in the second qualifying run there shall be another run for each of the competitors involved on the qualification course. This run will take place immediately after the qualifications. The start order will be drawn at the start.

2509.1.1.4 The number of competitors qualified for the finals depends on the number of participants in the qualification runs:

- if there are 50 or more participants in the qualifications,
- 16 competitors will be qualified for the finals
- if there are less than 50 participants in the qualifications,
- 8 competitors will be qualified for the finals.
- If there are less than 50 Men and Ladies starters the Jury, if time permits, may allow 16 Men and Ladies to compete in the finals. This must be announced a minimum of one hour before the start of qualifications.

2509.1.2 Parallel Qualifying run

2509.1.2.1 Parallel Qualifying System

The course is set parallel from the beginning. These courses are the same or similar to the parallel finals courses.

This Qualification system consists of two runs that whenever possible should be held on the same day:

<u>Qualification run (1st run):</u>

In the Qualification run, all competitors are sorted according to their FIS points ranking (except a random draw for the top 16). Each competitor has

one time run – odd numbers (1,3,5,...) on red course, even numbers (2,4,6,...) on blue course.

The top 16 ranked ladies and men on the red and the top 16 ranked ladies and men on blue course (32 ladies and 32 men) advance to the Elimination round.

Elimination run (2nd run - 32 ladies and 32 men):

Course exchange: The top 16 ladies and men from the red course qualification run on the blue course. The top 16 ladies and men from the blue course qualification run on the red course. Run 1 from the qualification and run 2 from the Elimination will be added together ("one red run and one blue run"). The top timed 16 athletes per gender advances to the finals.

The start order will be the reversed ranking order of the first qualification run. Place 16 goes first, place 15... place 1. If there is a tie at place 16 in the first qualification run all tied competitors are allowed to start in the elimination run.

2509.1.2.2 Tie-Breaking in Qualification

If two or more competitors with two qualification runs are tied, the ties will be broken by the best run of two. If they are still tied the tie will be broken using the highest current World Cup Standings (at World Cup competitions) or current FIS points (at WSC and FIS/COC level competitions). If they are still tied all will receive the same rank but the competitor with the higher bib number will be listed first. The exception is if they are tied for the 16th place (see 2509.1.2.3). (exception for 16th, place not valid for OWG).

2509.1.2.3 Tie-Breaking for place 16th

In case of a tie for place 16 there shall be another run for each of the competitors involved on the red course (same course for both). This run will take place immediately after the qualifications. The start order will be drawn at the start. (Rule 2509.1.2.3 is not valid for the OWG)

2509.1.2.4 Ranking:

The competitors who participate in both qualification and elimination run will be ranked according to their total time of two runs. The remaining competitors will be ranked according to their results of the first qualification run.

Ties for competitors which are out of the competition (do not advance to Elimination or Finals) will remain as final results and listed with the same rank already on the partial result lists.

2509.2 Parallel Finals

2509.2.1 Parings for Parallel Finals

8 resp. pairs are formed as follows using the results of the Qualifications:

Groups	Ladies and Men	
	Place 1 - Place 16 Place 8 - Place 9 Place 5 - Place 12 Place 4 - Place 13 Place 3 - Place 14 Place 6 - Place 11 Place 7 - Place 10 Place 2 - Place 15	

2509.2.2 Starting order

For each pair the competitor which is listed first or respectively on top of the pairing will do his first run on the red course. Following the order in the table, from top to bottom, all groups competition in succession. For the second run the competitors change courses. All runs in the parallel final are done using this system.

2509.2.3 A parallel final consist of:

- 1/8-finals
- 1/4-finals
- 1/2-finals
- small and big finals

2509.2.3.1 1/8-finals

The winners of the 1/8-finals heats qualify to the 1/4-finals.

2509.2.3.2 1/4-finals

The winners of the 1/4-finals heats qualify to the 1/2-finals.

2509.2.3.3 1/2-finals

The winners of the 1/2-finals heats qualify to the big final. The losers of the 1/2-finals heats qualify to the small final

2509.2.3.4 Small and Big Finals

The winner of the big final will be ranked 1st. The loser of the big final will be ranked 2nd.
The winner of the small final will be ranked 3rd. The loser of the small final will be ranked 4th.

2509.2.3.5 If the Parallel Qualifying System (2509.1.2) for qualification is used, a Final with only 8 men and 4 ladies is allowed.

The Jury needs to announce this at the Team Captains meeting before the competition

2509.2.4 Places 5 to 8 and places 9 to 16 are determined by the times of the qualification run(s). In any case a competitor which has qualified for a certain group will remain in this group even if his qualification time was slower

than one or more of the qualification times for competitors eliminated in a lower group.
e.g.: Once a competitor is qualified for inclusion in the top 8 the competitor will remain in the top 8.

2509.2.5 The losers of the elimination rounds 7–10 competition their first run for the 3rd and 4th positions before the finalists competition their first run, then the losers of the third elimination round run their second run and then the finalists run their final competition.

2509.2.6 *Two run format for parallel finals*

Each pair of competitors has to make two runs. The competitors change courses for the second run. The time difference between the two competitors at the finish line will be registered.
After the second run the time differences of the two runs will be added. The competitor with the lower time difference of the two runs will advance to the next round. The maximum time difference per run is the calculated penalty time, max. 1.5 sec.
If the time difference of both runs is tied, the winner of the second run will advance to the next round.
(If a delayed start gate is used and if two competitors are tied crossing the finish line of the second run, the competitor who lost the first run will be the winner).

A competitor who does not finish or is disqualified in the first run, starts the second run with a 4 % (max. 1,5 sec.) penalty (see art. 2512).

If competitors are tied in each of both runs, the competitor with the fastest qualification time advances to the next round.
In the case where both competitors have the same qualification time (=combined time of qualification run and elimination run), the tie is broken by the best run of 2.
If they are still tied the tie will be broken using the highest current World Cup Standings (at World Cup competitions) or current FIS points (at OWG, WSC and FIS/COC level competitions).

A competitor who does not start (DNS) the first run receives the penalty time. When both competitors do not start in the first run, the competitor who wins the second run advances automatically. When both competitors do not start in the second run, the competitor who won the first run, advances automatically. Additionally, when one competitor is a DNS and the other competitor in a pair is a DSQ, the competitor who did not start will receive the penalty for the first run, in the second run the competitor who started (but DSQ´d) will advance.

2509.2.7 *Single run format for parallel finals*

The 8 pairs are formed as in rule 2509.2.1
Each pair of competitors has to make only one run.

a) Qualification with combined qualification time.
   After each heat the competitor with the faster qualification time (= combined time of qualification run and elimination run) can chose either the red or blue course. If both competitors are disqualified at the same gate or are tied by the real time the competitor with the fastest qualification time advances to the next round.

In the case where both competitors have the same qualification time, the tie is broken by the best run of both qualification runs. If there is still a tie then the competitor with the higher bib number advances to the next round.

b) Qualification with “best of two” qualification runs
After each heat the competitor with the better qualification time can chose either the red or blue course.
If both competitors are disqualified at the same gate or are tied by the real time, the competitor with the fastest qualification time advances to the next round.
If there is still a tie then the competitor with the higher bib number will advance to the next round.

2509.2.8 *Did not start (DNS) in Parallel Finals*

If a competitor does not start in the eighth or quarter final, they will be automatically ranked in the 16th (eighth final) or 8th (quarter final) position. If two or more competitors do not start, the (DNS) competitors will be ranked on (15/16th) and (7th/8th) place according to their qualification times (and so on with three (3) or more DNS competitors).
If a competitor does not start in the first run in the small or big final the other competitor must start only once.

2509.3 Inspection of the courses

2509.3.1 The competitors are allowed a minimum of 10 minutes to inspect the parallel courses (qualification and finals). The method of inspection is determined by the Jury.
Competitors are not allowed to touch (hold) the gates during inspection. First offense will be a warning sanction, second offense may result in a disqualification sanction from the competition.

2510 Control of the Races

The gate Judges are situated on both exterior sides of the courses. Each gate judge may be supplied with a flag which corresponds to the color of the course they are controlling (either blue or red). This flag is to be used immediately to notify the Jury of a potential disqualification / sanction in his section of the course. An official (judge) appointed by the Jury may be located approximately half way down the course with a yellow flag where immediate judging of a gate judge's sanction / disqualification is done by raising the yellow flag in the direction of the course where the disqualification has been indicated. The raising of the yellow flag confirms the disqualification of the competitor.

2511 Disqualifications / Sanctions

2511.1 Causes for disqualifications are the following:

- false start (art. 2505.3)
- disturbing opponent, voluntarily or not at the final runs When a competitor disturbs his opponent during the qualification and elimination run, the disturb competitor may receive a rerun. The run of the competitor who disturbs the opponent will count finally..
- incorrect gate passage

– turn not executed on the outside of a gate
– not finishing the run with at least one foot fixed to the board.

2511.2 The competitor who is disqualified or does not finish the first run of a round will start in the second run with a penalty time.

2511.2.1 The competitor who is disqualified or does not finish / abandons in the second run is eliminated.

2511.2.2 In case both competitors do not finish, the competitor that passes the most gates:
first run: wins the first run
second run: advance to the next round

2512 Penalty Time

The Penalty Time will be calculated using the best time of the qualifications for both ladies and men. A 4 % penalty of this time, with a maximum of 1.5 seconds, will be used in the parallel finals.

In all cases the maximum time difference for the first run of each pairing can never be higher than the penalty time. i.e. the actual time difference is 3 seconds, the penalty time is 1.5 seconds, then the second run will be started with a handicap of 1.5 seconds for the loosing competitor of the first round.
If both competitors are tied after the second run by their respective penalty times the competitor who wins the second run advances to the next round.
If both competitors are disqualified in the second run at the same gate, the competitor who won the first run advances to the next round.

2513 Competiton Clothing

Parallel competition suits must be two piece – pants and separate top. Form fitting speed or downhill suits are not permitted. Non protruding body protection and padding is recommended. Protective equipment i.e. back protection must be worn on the body. No straps, fastening devices or other methods can be used to tighten the suit material closer to the body. Shin guards are excluded from this rule.

2514 Parallel Team Event

2515 Technical Data

The same rules apply for vertical drop, length/inclination, width and the use of gates as for a regular Parallel event (Rule 2502.1 – 2502.2)

2516 Courses

The same rules apply for general characteristics of the courses and course preparation as for a regular Parallel event (Rule 2502 – 2503)

2517 Course setting

The same rules apply for course setting as for a regular Parallel event (Rule 2504)

2518 Inspection

The same rules apply for course inspection as for a regular Parallel event (Rule 2509.3)

2519 Execution of a Parallel Team

2519.1 Qualification

The most current World Cup or COC Cup Standing List or FIS points list (whichever is higher) will be used to determine the participating nations teams. The list is cut off at the top 60 men and top 30 women in any case. The list is sorted by Nation and ranked highest to lowest within each nation. The points are combined for all nations pairs of athletes from top to bottom. The nations teams are ranked by points and teams are chosen for entry by moving down the list choosing the highest ranked team from each nation first, then starting at the top of the list again to choose the second (if any) ranked team from each nation, repeating as necessary, until 8 teams for women and 16 teams for men have been reached.

2519.2 Seeding

Teams will be ranked according to team points for purposes of seeding into standard World Cup Parallel brackets.

2519.3 Teams field

Once the nation teams qualification and seeding is determined, each nation can field any eligible athlete (*) into those teams, although each athlete is only eligible to compete on one team. Nations must declare which athletes will comprise each team at the seed meeting for the competition start. Nations determine by themselves which teammate will run 1st and 2nd. Similar to regular Parallel events the course is determined by each nation team seed. * Minimum requirements for WC are top 60 WC Standing List for men and top 30 WC Standing List for women. Furthermore all participants have to be entered as a part of their nations regular quota for Parallel.

2519.4 Competition

In a Parallel Team event the first competitor from each team wears a transponder on their front leg below the knee and above the ankle. The first competitors from each team will start with the traditional Parallel start cadence is given with both gates opening at the same time. As soon as these competitors leave the start the gates are closed and their teammates line up again. The courses will be switched for the 2nd teammate. (1st athlete goes on red, 2nd athlete has to go on blue) When the first competitor from a team crosses the finish line the transponder sends a signal to the start gate that opens just the individual start gate for their teammate. The first team who`s 2nd teammate crosses the finish line will advance to the next round.

2519.5 Gate Judges

The same rules apply for the use of gate judges as like in a regular Parallel event (Rule 2705.5)

2519.6 **Competition Clothing**

The same rules apply for competition clothing as like in a regular Parallel event (Rule 2705.6)

2520 Start

The same rules apply for start ramp, start gates and start lanes as like in a regular Parallel event (Rule 2707.1-2707.2) as well as for start command, false start or malfunction of the start gate (Rule 2707.4-2707.5)

2521 Protest

The same rules apply for Protests as like in a regular Parallel event (Rule 2709-2709.2)

2522 Did not start (DNS) in Parallel Finals

If a competitor does not start in the eighth or quarter final, they will be automatically ranked in the 16th (eighth final) or 8th (quarter final) position. If two or more competitors do not start, the (DNS) competitors will be ranked on (15/16th) and (7th/8th) place according to their qualification times (and so on with three (3) or more DNS competitors). If a competitor does not start in the first run in the small or big final the other competitor must start only once.

2523 Inspection of the courses

The competitors are allowed a minimum of 10 minutes to inspect the parallel courses (qualification and finals). The method of inspection is determined by the Jury.
Competitors are not allowed to touch (hold) the gates during inspection.
First offense will be a warning sanction, second offense may result in a disqualification sanction from the competition.

2524 Control of the Races

The gate Judges are situated on both exterior sides of the courses. Each gate judge may be supplied with a flag which corresponds to the color of the course they are controlling (either blue or red). This flag is to be used immediately to notify the Jury of a potential disqualification / sanction in his section of the course. An official (judge) appointed by the Jury may be located approximately half way down the course with a yellow flag where immediate judging of a gate judge's sanction / disqualification is done by raising the yellow flag in the direction of the course where the disqualification has been indicated. The raising of the yellow flag confirms the disqualification of the competitor.

2525 Disqualifications / Sanctions

2525.1 **Causes for disqualifications are the following:**

– false start (art. 2505.3)
– disturbing opponent, voluntarily or not
– incorrect gate passage
– turn not executed on the outside of a gate

– not finishing the run with at least one foot fixed to the board.

2525.1.1 The team which is disqualified or does not finish / abandons in the second run is eliminated.

2525.1.2 In case both teams do not finish, the competitor that passes the most gates: first run: wins the first run, the gates will open for the second run according penalty time rule 2512 second run: advance to the next round

2526 Final Ranking according Parallel Events ranking 2509.2

Two run Parallel Final

2526.1 DNS, DSQ, DNF in SBX Team Finals

If a team does not start in the round of 16 or 8 they will be automatically be ranked in the 16th or 8th position. If two or more teams do not start, the DNS teams will be ranked 16/15th or 8/7th according to their seeding position and so on with 3 or more DNS teams. Order of placing: DNF/DSQ (sports disqualification/sanctions) to be ranked first, DSQ (intentional contact, etc) to be ranked 2nd, and DNS to be ranked third.

2600 SNOWBOARD HALFPIPE

2601 Technical Data

2601.1 Definition

The Halfpipe is a channel constructed in the snow.

2601.2 Specifications

Code	Halfpipe Criteria	Measurement
S (ft)	Size:	
	Level A	22 foot
	Level B	18 foot
	Level C	15 foot
L (m)	Length (rideable length)	
	22 foot	min 150,0 m
		recommended 170,0 m
	18 foot	min 120,0 m
		recommended 150,0 m
	15 foot	min 100,0 m
		recommended 120,0 m
H (m)	Height, from bottom of pipe to coping	
	22 foot	6,7 m
	18 foot	5,3 m
	15 foot	3,5 m
V (m)	Vert, top of the wall	0,2 m: 82 - 83 degree
I (°)	Inclination, centre line of pipe	
	22 foot	min 17,0°
		recommended 18°
	18 foot	min 16°
		recommended 17°
	15 foot	min 14°
		recommended 15°
W (m)	Width, from coping to coping	
	22 foot	min 19,0 m
		recommended 19,0- 22,0 m
	18 foot	min 17,0 m
		recommended 17,0 - 19,0 m
	15 foot	min 15,0 m
		recommended 15,0 - 17,0 m
	Competition Level	
Level A	OWG, WSC, WJC, WC, YOG	
Level B	COC, UVS	
Level C	NC, FIS, EYOF, JUN	

2602 The Halfpipe site

2602.1 The Halfpipe site must conform to the technical data/specifications (art.2601.2).
The Halfpipe site must be finished and ready for training at least one day before the start of the competition.

2602.2 All Olympic Winter Games, World Championship and World Junior Snowboard Championship and FIS World Cup Halfpipes must conform to the recommended and approved specifications and must have a grooming machine specifically designed for Halfpipe preparation. Training periods must be observed with two (2) days of scheduled training being provided before the competition. The Jury may reduce the training period under special conditions.

2602.3 Only maneuvers deemed to be executed within the Halfpipe venue will be scored.

2603 Training

Training shall be at the discretion of the Jury and will be announced at the first Team Captains meeting. (See Article 2602.2)

2604 Competition formats

2604.1 Single Format (Finals: one out of two)

Qualification 1st run	Ladies Men	All Participate All Participate	1–3 Qualify 1–6 Qualify
Qualification 2nd run (start order is reverse of rank from Q1)	Ladies Men	4–15 from 1st Q Participate 7–25 from 1st Q Participate	1–3 Qualify 1–6 Qualify
Finals 1st Run *(start order is revers of Q2 and then Q1 rank)*	Ladies Men	6 Participate 12 Participate	
Finals 2nd Run (start order is revers of Final Run 1st)	Ladies Men	6 Participate 12 Participate	
Final Rank as follows	Ladies	1–6 7–15 16.....	Best run of Final Run 1 or 2 Result of Q Run 2 Result of Q run 1
	Men	1–12 13–25 26.....	Best run of Final Run 1 or 2 Result of Q Run 2 Result of Q Run 1

2604.1.1 Single Format (Finals: one out of two, all for 2nd qualification)

Qualification 1st run	Ladies Men	All Participate All Participate	1–3 Qualify 1–6 Qualify
Qualification 2nd run (start order is reverse of rank from Q1)	Ladies Men	4–all from 1st Q Participate 7–all from 1st Q Participate	1–3 Qualify 1–6 Qualify
Finals 1st Run *(start order is revers of Q2 and then Q1 rank)*	Ladies Men	6 Participate 12 Participate	
Finals 2nd Run (start order is revers of Final Run 1st)	Ladies Men	6 Participate 12 Participate	
Finals 3rd Run (start order is revers of Final Run 2st)	Ladies Men	6 Participate 12 Participate	
Final Rank as follows	Ladies	1–6 7– …….	Best run of Final Run 1 or 2 Result of Q Run 2
	Men	1–12 13–	Best run of Final Run 1or 2 Result of Q Run 2

First run: both competitors with an unbreakable tie at 6 (men) or 3 (ladies) advance to the finals. One less competitor advances from the second run. Second run: both competitors with an unbreakable tie at 12 (men) or 6 (ladies) advance to the finals. There will be one more competitor in the finals.

2604.2 Single Format (Finals: two out of three)

Qualification 1st run	Ladies Men	All Participate All Participate	1–3 Qualify 1–6 Qualify
Qualification 2nd run (start order is reverse of rank from Q1)	Ladies Men	4–15 from 1st Q Participate 7–25 from 1st Q Participate	1–3 Qualify 1–6 Qualify
Finals 1st Run *(start order is revers of Q2 and then Q1 rank)*	Ladies Men	6 Participate 12 Participate	
Finals 2nd Run (start order is revers of Final Run 1st)	Ladies Men	6 Participate 12 Participate	
Finals 3rd Run (start order is revers of Final Run 2st)	Ladies Men	6 Participate 12 Participate	
Final Rank as follows	Ladies	1–6 7–15 16.....	Best two runs of Final Run 1,2 or 3 Result of Q Run 2 Result of Q run 1
	Men	1–12 13–25 26.....	Best two runs of Final Run 1,2 or 3 Result of Q Run 2 Result of Q Run 1

2604.2.1 *Single Format (Finals: two out of three, all for 2nd qualification)*

Qualification 1st run	Women Men	All Participate All Participate	1 – 3 Qualify 1 – 6 Qualify
Qualification 2nd run (start order is reverse of rank from Q1)	Women Men	4–all from 1st Q Participate 7–all from 1st Q Participate	1 – 3 Qualify 1 – 6 Qualify
Finals 1st Run *(start order is revers of Q2 and then Q1 rank)*	Women Men	6 Participate 12 Participate	
Finals 2nd Run (start order is revers of Final Run 1st)	Women Men	6 Participate 12 Participate	
Finals 3rd Run (start order is revers of Final Run 2st)	Women Men	6 Participate 12 Participate	
Final Rank as follows	Women	1–6 7–	Best two runs of Final Run 1,2 or 3 Result of Q Run 2
	Men	1–12 131–	Best two runs of Final Run 1,2 or 3 Result of Q Run 2

First run: both competitors with an unbreakable tie at 6 (men) or 3 (ladies) advance to the finals. One less competitor advances from the second run. Second run: both competitors with an unbreakable tie at 12 (men) or 6 (ladies) advance to the finals. There will be one more competitor in the finals.

2604.3 Heat Format

2604.3.1 *Qualification*

Competitors will be grouped into heats of:
Men: 20-30 per heat, Ladies 15-25 per heat.

The seeding will be done as follows:

- Number of heats will be decided by the Jury before the Team Captains Meeting, based on time and number of entered participants in the competition.
- If a semi-final will be used it will be decided by the Jury before the Team Captains Meeting, based on time and number of entered participants in the competition.
  Competitors will be ranked according to their highest ranking on current FIS WC, CoC or FIS points list in Halfpipe. (If competitors are tied the higher points in the second category will decide their position. If they are still tied their position will be decided by draw.)
  In FIS WC competitions the competitors can be ranked using the World Snowboard Points List instead. Which list will be utilized has to be an-

nounced prior to the Team Captains (Draw) Meeting.

- If there will be two heats, the competitors will be divided with even and odd ranking:
  - Heat 1: Ranking 1, 3, 5, 7 etc.Heat 2: Ranking 2, 4, 6, 8 etc.
  - If there will be three heats, each third competitor will be in each heat from the ranking:
  - Heat 1: Ranking 1, 4, 7 etc.Heat 2: Ranking 2, 5, 8 etc.
    Heat 3: Ranking 3, 6, 9 etc.
- Every heat will have a scheduled warm-up of between 15-40 minutes (time to be decided by the Jury), directly followed by the two qualification runs with the best run to count.

2604.3.2 *Qualification direct to the Finals will be as follows if no Semi-Final is held:*

Men:

With two heats:	Top six (6) ranked competitors from each heat advance
With three heats:	Top four (4) competitors from each heat advance.
With four heats:	Top three (3) competitors for each heat advance

Ladies:

With two heats:	Top three (3) ranked competitors from each heat advance.
With three heats:	Top two (2) ranked competitors from each heat advance.

2604.3.3 Heat competition format with XX competitors advances to Final
(Only for FIS level competitions + Continental Cups)

The Jury may conduct heats for qualifications with the athletes advancing from each heat plus the next scores from the overall qualifying day not already qualified. Number of specific athletes is relative to the finals field size as determined by the Jury.

2604.3.4. **Finals: (6 ladies and 12 men)**

Start order for Halfpipe finals using heat formats will be:
Same start order for final run 1 and Final run 2 based on results from qualification
Start order for finals will be: In case of two (2) heats the competitors will be seeded according to their results in the qualifications. The first ranked competitors of each heat will start as 11 and 12 based on their score from qualifications highest score last. The second ranked from each heat will start as 9 and 10 based on their scores from qualifications highest score last etc.

In case of three (3) heats, the first ranked competitors 1 of each heat will start as 10, 11 and 12 based on their score from qualifications. The second ranked from each heat will start as 7, 8 and 9 based on their score from qualifications highest score last etc.

2604.3.5 *Number of Runs for Qualification and Finals*

In special circumstances the jury can decide to execute qualification, semi-finals and / or finals in one run.

Start order for finals will be: In case of two (2) heats the competitors will be seeded according to their results in the qualifications. The first ranked competitors of each heat will start as 11 and 12 based on their score from qualifications highest score last. The second ranked from each heat will start as 9 and 10 based on their scores from qualifications highest score last etc.

In case of three (3) heats, the first ranked competitors of each heat will start as 10, 11 and 12 based on their score from qualifications. The second ranked from each heat will start as 7, 8 and 9 based on their score from qualifications highest score last etc.

Final ranking will be as follows:

Ladies	1- 6	Best single run out of Final run(s) 1 or 2
	7 - end	Best single run out of Qualification run(s) 1 or 2
Men	1 - 12	Best single run out of Final run(s) 1 or 2
	13 - end	Best run out of Qualification run(s) 1 or 2

2604.3.6 *Number of Runs for Qualification and Finals*

In special circumstances the jury can decide to execute qualification, semi-finals and / or finals in one run.

2604.4. Double-up Format (only for Qualification)

The Judges will be divided into two (2) different judging panels with one (1) Head Judge. Each of the two (2) panels will consist of 3 Judges. The Judges will judge the competition based upon an Overall Impression basis. The competition Format is the Heat System like described in 2604.7..
Competitors of all Heats are training and competing at the same time. Judge Panel one scores both runs from Heat 1/3, Judge Panel 2 scores both runs from Heat 2/4.

Qualifications: The starting field will be divided and grouped into two (2) heat sections for seeding.

2604.5 Jam-Session (Only for FIS level competitions + only for Finals)

12 men and 6 ladies will be in Finals.
Two groups of three Judges (A-B), all judging Overall Impression. Each competitor will ride for ~~a~~ total of one (1) hour or such time as determined by the Competition Jury. The 2 best total panel scores out of each competitors runs will be added together to determine the final result.

2604.6 Semi-Final Format

After utilizing one (1) of the qualification formats an additional Semi-Final run can be added by the Jury to further break down the competitor finals field size. The use of a Semi-Final format must be announced by the Jury at the team Captain Meeting held prior to the start of competition.

Recommended: Semi-Final field sizes between 15–25 competitors. Each competitor will receive one (1) run with each judge utilizing an Overall Impression judging format. The top ranked 5–10 competitors will advance to the finals.

2604.7 Heat Competition Format with Semi Final

Before the Team Captains meeting, the Jury (Head Judge, Technical Delegate and Chief or Competition) with the Race Director will decide which format will be used.

2604.7.1 Qualification:

Competitors will be grouped into heats of: Men: 20–30 per heat, Ladies 15–25 per heat

2604.7.2 The Seeding will be done as follows:

- Number of heats will be decided by the Jury before the Team Captains meeting, based upon time and entered participants in the competition.
- If a semi-final will be used it will be decided by the Jury before the Team Captains meeting based on time and entered participants in the competition.
  Competitors will be ranked according to their highest ranking on the current WC, CoC or FIS points list in Halfpipe. (If competitors are tied the higher points in the second category points list will decide their position. If they are still tied their position will be decided by a draw).
  In FIS WC competitions the competitors can be ranked using the World Snowboard Points List instead. Which list will be utilized has to be announced prior to the Team Captains (Draw) Meeting.
- If there are be two (2) heats, the competitors will be divided with even and odd ranking
- See 2604.3.1 for seeding examples and procedures

2604.7.3 Qualification directly to Finals will be as follows if Semi-Finals are utilized

Men

With two (2) heats: top three (3) ranked competitors from each heat (3+3=6)
With three (3) heats: top two (2) ranked competitors from each heat (2+2+2=6)
With four (4) heats: top two (2) ranked competitors from each (2+2+2+2=8)

Ladies

With two (2) heats: top two (2) ranked competitors from each heat (2+2=4)
With three heats: top one (1) ranked competitor from each heat (1+1+1=3)

2604.7.4 Semi-Final Qualifier to Finals will be as follows:

Men

With two (2) heats: Rank: 4th - 9th competitors from each heat (6+6=12)
With three (3) heats: Rank 3rd - 6th competitors from each heat (4+4+4=12)
With four (4) heats: Rank 3rd – 5th competitors from each heat (3+3+3+3=12)

Ladies
With two (2) heats: Rank 3rd–5th competitors from each heat (3+3=6) With three (3) heats: Rank 2nd–3rd competitors from each heat (2+2+2=6)

Competitors will receive two (2) more runs and the following will advance to the Finals.

Men
With one (1) + two (2) + three (3) heats where 6 competitors already have advanced to finals from Qualification: Top ranked competitors: 1st–6th advance to the Finals
With four (4) heats where 8 competitors have already advanced to Finals from Qualification: Top ranked competitors: 1st – 4th advance to Finals

Ladies
Top ranked competitors: 1st–3rd advance to the Finals

2605 Execution of a Halfpipe

The qualification run(s) is/are part of the Halfpipe competition.
The official results of the qualification run shall determine the qualified competitors for the finals. The number of competitors to qualify for the finals (maximum 24 men / 12 ladies) must be announced at the Team Captains Meeting held before competition commences.

Only the finals shall determine the final ranking for the qualified competitors
The official results will include:
– the ranking list from the qualification run(s)
– the final ranking of the qualified competitors from the finals.
The competition format can be alter between the knockout format and the single format. The decision is taken by the Jury and must be announced at the Team Captains meeting.

If a competitor leaves the start (after the Head Judge has signified that the Judges are ready and the Starter gives the competitor a signal to start) the run will count and be Judges as such (even if the competitor stops before the first hit – no rerun or restart will be allowed.

A competitor who is disqualified (DSQ) in qualification round 1 is not allowed and has no right to start in qualification round 2.

2606 Seeding

Competitors ranked 1-16 (men and ladies) will be randomly drawn in the first seed and competitors ranked 17 through the end will be randomly drawn for the second seed.
In the Heat format, seeding will be done differently (see art. 2604.3).

2607 Competitors Equipment

2607.1 *Bibs*

The shape and size of the start numbers may not be changed on penalty of disqualification / sanction. All bibs must be worn in the proper position at all times during warm-up, training, competition and awards.

2607.2 *Helmets*

Helmets are mandatory for all FIS Snowboard events during inspection, training and competition. All competitors and forerunners must wear helmets manufactured for snowboarding /or ski racing allowing clear vision (see art. 2010.6). It is strongly recommended that competitors consider utilization of back protection.

2608 Public Address System

2608.1 Music is used in pipe competitions. The sound system must be powerful enough for the competitor to hear the music clearly and without distortion while on any part of the pipe. The sound technician is responsible for stock tapes during the competition.

2609 Judges Stand

2609.1 The minimum size of the scaffolding area must be 5 meters by 2,5 meters. The judges viewing area should be constructed to provide ample room for the appropriate number of officials and to provide room for viewing and the proper amenities for the operation of the competition. The Judges stand must be at the bottom of the Halfpipe.

The Judges area should be fenced and closed off to competitors as well as spectators.

2610 Start and Finish officials

2610.1 The Starter

The Starter is responsible for the warning signal, the start command and that the competitors are wearing their bibs and helmets. The Starter must be in radio contact with the Head Judge.

2610.2 The Finish Official

The Finish Official is in charge of the finish area. They are responsible to ensure that there is an exit for all competitors and there is spectator control.

2611 Start

The start area must be closed off to everyone except the starting competitor, accompanied by one coach and the start official (Starter) (see art. 2022).

2611.1 **Start Signal**

Start signals for the competition will be given by the Starter (see art. 2022.4.3).

2611.2 **Drop-in area**

The drop in area gives the competitors the opportunity to enter the Halfpipe with proper speed, momentum and is not used to attempt a maneuver.

2612 Finish

The finish area should be flat in nature and large enough to allow the competitor to come to a controlled stop. The finish area should be fenced off and controlled. Fences utilized should be laid out so as to proved maximum visibility for officials, media and spectators. The exit gate must be set up so that competitors are required to remove their board before leaving the finish area (see also art. 2025).

2612.1 **Finish line**

The finish line should be marked by a painting colored line across the bottom of the pipe and up the walls to the lip. The placement of the finish line shall be under the control of the Head Judge. The finish line is the last point where a competitor can takes off and performs a trick that will count as part of the competitors score. Any tricks performed after the finish line must not be counted in the score.

2613 Judges (Competition Levels)

2613.1 **Level 3–4 Competitions (FIS and Nationals)**

One (1) Judge must be from a foreign nation

Level 2 Competitions (COC)

One (1) scoring Judge must be from a foreign nation and the Head Judge should be from a foreign nation.

Level 1 Competitions (WC, WJC, WJC and OWG)

All Judges must be from different nations (except the Head Judge and one scoring judge can be from the same nation) (see also FIS Snowboard Judges Manual).

2613.2 If due to “force majour” or other issues the FIS together with a competition Jury can make exceptions to the composition of the judging panel. In level 2, 3, or 4 competitions. In level 1 competitions only the FIS can authorize exceptions.

2614 Halfpipe Judging

2614.1 For each Halfpipe competition, the Head Judge and 5 international Judges will be present during the entire competition including preparation.

2614.2 Judges must score competitors during the Halfpipe competitions in accordance with the FIS Judging Criteria.

2614.3 Use of score cards by Judges to mark competitor scores should include information such as: bib number(s), and Judges will also keep a memory board to record notations on competitor runs i.e (tricks, falls, scores etc.)

2614.4 Discussions by Judges concerning competitors scores should be minimal in nature unless initiated by the Head Judge.

2614.5 No competitor, team representative, or spectator will be allowed to approach the Judges stand or speak with Judges during the competition.

2614.6 Any protest or problem arising from the judging will be dealt with by the Head Judge and the Competition Jury.

2614.7 Judges may not be assigned to competitions in which a family member is participating (children, brother, sister, husband, wife).

2614.8 Three (3) – six (6) Judges shall independently evaluate the competitor's performance based upon the Judges criteria if there are 6 scoring Judges the high and low scores shall be discarded and the remaining scores will be averaged. If there are 3 – 5 scoring Judges, all scores will count.

2615 Judges/Head Judge responsibilities and duties

2615.1 Judges responsibilities and duties

2615.1.1 To adjudicate and rank every competitor fairly, without bias, without regard to former impressions, and without regard to the competitor’s national affiliation, competition, color or creed.

2615.1.2 All Judges shall articulate all potential conflicts of interest to the Head Judge prior to accepting an assignment.

2615.1.3 The Judges while in their professional capacity shall refrain from discussing personal viewpoints of the judging to team captains, competitors, and spectators before, during and after the course of the competition.

2615.1.4 A judge shall be discreet and reasonable in all discussions.

2615.1.5 A judge shall not predict outcomes in advance.

2615.1.6 A judge shall accept criticism calmly and maintain composure in all situations.

2615.1.7 A judge shall not in any way communicate the conduct of any judge in a disparaging manner. Any criticism of a judge’s performance or behavior shall be directed to the competition Head Judge.

2615.1.8 All Judges shall be skilled in identifying the various maneuvers that the competitors perform.

2615.1.9 Judges shall attend all Judges briefings and post-competition sessions, team captain meetings, and be available to the Head Judge.

2615.1.10 All Judges need to be able to judge in an effective and timely manner.

2615.1.11 To follow the FIS judging criteria in all aspects.

2615.2 Head Judge responsibilities and duties

2615.2.1 To help coordinate the Judges' accommodations, per diem and related transportation.

2615.2.2 To attend the team captain's meeting the day before the contest and conduct the Judges briefings and post competition analysis with the Judges.

2615.2.3 To attend all necessary course inspections with the TD, the Chief of Competition / Chief of Pipe, and available team captains.

2615.2.4 Brief Judges secretaries and ready administrative materials for judging (supplies, scorecards, comfort items).

2615.2.5 To accept all properly executed protests.

2615.2.6 To insure the appropriate behavior of the Judges at all times during the competition.

2615.2.7 To lead all discussions during training and forerunning for the purpose of calibration.

2615.2.8 Determines which judge will be used for specific categories and overseas changes in assignments if deemed appropriate.

2615.2.9 Supervision and control scoring procedures, including dialogue concerning divergent scores.

2615.2.10 Announcing to the starter when Judges are ready for competitors and to articulate to the Judges the number of the next competitor.

2615.2.11 Responsible for the total control of the Judges stand and the activities that take place upon it.

2615.2.12 Responsible for the calculation and the checking of all score.

2615.2.13 To check the accuracy of all tie breaking procedures.

2615.2.14 To act as a substitute judge in emergencies.

2615.2.15 To inspect as a member of the Jury the judge's stand for purposes of approving its location, facilities, layout, and line of sight. The inspection by the Jury should occur at least one day before the day of competition.

2615.2.16 To be responsible as a member of the Jury and with the other Jury members together with the Chief of Halfpipe for the oversight of the Halfpipe construction and maintenance during practice and competition.

2615.2.17 To be the final authority on all judging issues at the competition, and to accept all responsibility for any irregularity in the service provided by the Judges to the competition.

2615.2.18 To be part of the Jury with the Technical Delegate, and the Chief of Competition/Chief of Pipe.

2616 Snowboard Halfpipe Scoring System

2616.1 Each judge must use a 100 point system for example 2, 6, 87, 93 etc. .
Each judge can give a maximum of 100 points for each competitor
The score of the Judges will be averaged for each competitor run truncated after the second decimal and XX,XX out of 100 will be displayed as the total score for that particular run.

2616.2 Each judge will judge Overall Impressions.

2616.3 All scores must be posted after each run.

2616.4 Tie breaking

2616.4.1 Single Run (Qualification)

If a tie exists, the competitor with the two highest counting scores in the tied run shall be ranked first. If they are still tied, the comparison of the highest three scores in the tied run shall determine who is ranked first. If they are still tied, the competitor with the higher respective cup standing (e.g. EC/NAC/WC) will be ranked first. In the case of competitions, where there is no cup standing the competitor with the higher ranking on the FIS points list will be ranked first.

2616.4.2 Two Run Combined (Qualification)

If a tie exists in a two run combined score, the competitor with the highest individual scored run shall be ranked first. If they are still tied, the competitor with the three highest counting scores of the tied run will be ranked first. If they are still tied the comparison of the two (2) highest counting Judges scores of the other final run will determine who is ranked first. If they are still tied, the highest three (3) counting Judges scores of the other final run will determine who is ranked first. If they are still tied, the competitor with the higher respective cup standing (e.g. EC/NAC/WC) will be ranked first. In the case of competitions, where there is no cup standing the competitor with the higher ranking on the FIS points list will be ranked first. .

2616.4.3 Best of two Runs (Qualification and Semifinals)

If two (2) or more competitors obtain the same score in the best run of two, the tie will be broken by comparison of the two (2) highest counting scores in the best run. If they are still tied, the highest three (3) counting Judges scores in the best run will ranked first. If they are still tied, the competitor who obtained the highest total score in the other run will be ranked first. If they are still tied, the comparison of the two (2) highest counting Judges scores of the other final run will determine who is ranked first. If they are still tied, the highest three (3) counting Judges scores of the other final run will determine who is ranked first. If they are still tied, the competitor with the higher respective cup standing (e.g. EC/NAC/WC) will be ranked first. In the case of competitions where there is no cup standing the competitor with the higher ranking on the FIS points list will be listed first.

2616.4.4 *Qualification without Semifinals*

Ties on last position to qualify for finals, the tie will be broken according to rule 2616.4.3.

2616.4.5 *Qualification with Semifinals*

If a tie exists on the last position to go to semifinals the tie will not be broken. Ties on last position to qualify for finals, the tie will be broken according to rule 2616.4.3

All tied riders go directly to the finals. In such a case the number of qualified riders for the semifinals will be accordingly reduced (e.g. heat 1 place 3 and 4 are tied and both are going to finals, only place 5-9 goes to semifinals)

Out of the semifinals the number of riders that qualify for the final will be accordingly reduced.

2616.4.6 *Ties after finals (during final run) – Ties on the official result list.*

When two or more competitors have the same score they will receive the same rank (points) but the competitor with the higher start number will be listed first on the official result list.

Ties for competitors which are out of the competition (do not advance to Semifinals or Finals) will remain as final results and listed with the same rank already on the partial result lists (e.g. Qualification Results, Semifinals Results)

Ties occurring out of different heats will not be broken.

2617 Judging Criteria

2617.1 Overall Impression (OI)3 – 5 Judges counting scores

All judges will score the run by evaluating the run from start to finish with an overall precision. The judges evaluate the precise nature of the run in relation to maneuvers attempted, both individually and as a sequence. The overall composition of the run is very important as the judges evaluate the sequences of tricks, the amount of risk in the routine, and how the rider uses the pipe. The judges take falls, mistakes and stops into consideration and can deduct up to 25 % of the points of the run/judge for each fall/stop. (See deduction scale: 2617.2)

Judges must have a good trick knowledge. Without understanding the trick, it must be very hard to finalize a result.

As an overall impression judge you must consider

(These are not in any particular order)

- Amplitude:
- Greater amplitude increases the risk of the trick.
- Difficulty:
- There is more than just the number of rotations that affects the difficulty. Judges consider:
- Switch take offs or landings
- Frontside or Backside rotations,
- Take offs, on heel or toe,
- Different grabs
- Blind landings
- Hard combinations and the sequence of tricks

- Different rotation axis (Longitudinal/Lateral Axis, Vertical Axis)
- Alley oop

Preforming grabs can change the difficulty of the trick. Boning or tweaking can increase the difficulty and also where you grab on the board and what hand during different rotations.

When preformed with amplitude and good execution, straight airs can be highly rewarded

Execution:

Control should be maintained during the whole run, from start to finish. The riding should be done with good stability and fluidity. Each individual trick should be performed with full control. When an athlete decides to perform a trick, he should reach the position chosen and show that this is the position he wants. In rotations flips and different hybrids, the rotation should be done in one manoeuvre and control should be held, demonstrated in one unique movement with an equal rotational rhythm from beginning to the end. "The trick should look easy".

If the intention of a grab is done, the grab should be made on the board and not anywhere else. (boot grab, Binding grabs etc…) Preformed grab/grabs are very important in all kind of manoeuvres and a missed or weak grab will influence the judges score radical.

Take offs and landings should be performed on the higher part of the half-pipe. Before landing, tricks must have been completed in preparation for landing.

Variety:

When the athlete preforms the run, variety must be a key factor. Mixing different tricks into a good run. Straight airs, alley oops, air to fakies and spinning different ways:

Backside/ Frontside, Left/Right, Longitudinal/Lateral Axis, Take offs and landings should be a mix of switch and normal. Grabbing the board with different grabs on different spins.

Pipe Use:

The run should be performed from start to finish. Judges count the run until he has crossed the finish line.
Take offs and landings should be performed on the higher part of the half-pipe.

Progression:

By rewarding progression we help to push the sport forward.
Introducing new tricks that have not been performed before

Risk taking:

To preform difficult tricks earlier in the run .
We want to see the athletes to push their run to its maximum but not beyond.

Combinations:

To have difficult trick combinations in a row in the halfpipe instead of separating them with easier tricks

Consideration:

For a judge to “know” how difficult tricks and combos are, judges need to have communication with athletes and coaches to see their opinion. This item should be discussed with coaches at official coaches meetings during the season. Not at each competition. Difficulty is very individual and athletes, judges and coaches may disagree with each other when discussing difficulty scales. But judges must have a clear opinion when working on a competition what is easy and what is difficult.

2617.2 Deductions for falls will be as follows:

1 – 10	Small mistakes including flat landings, deck landings, sliding, light hand touches and other instabilities.
11 - 20	Medium mistakes including stop full, extended hand drags, heavy hand touches, light butt checks and reverts.
21 – 25	Major mistakes including heavy butt checks, body checks and complete bails.

The deduction by the Judges is taken from the score that would have been given with a correct completed landing on the tricks.
For example a competitor, considered to be not under control could be awarded 45 points by a Judge for the run and receive a 20 point deduction for a major landing fault, thus giving the competitor a score of 25.

2617.3 Special Procedures: Halfpipe

Stops

If a competitor stops in the Halfpipe for more than 10 seconds, the competitor will be scored to that point and the run will be considered terminated. The competitor should then exit the course as soon as possible.

2700 SNOWBOARD CROSS (SBX)

2701 Technical Data

Code	Snowboard Cross Course	Measurement
CL (m)	Course Length	650,0 m - 1200,0 m
	Level A	1050,0 m (+/- 150,0 m)
	Level B	min 750,0 m
	Level C	min 650,0 m
CA (°)	Course Angle (average)	12,0° (+/- 2,0°)
VD (m)	Vertical Drop	min 130,0 m max 250,0 m
	Level A	215,0 m (+/- 35,0 m)
	Level B	min 165,0 m
	Level C	min 130,0 m
SW (m)	Slope Width	40,0 m
TW (m)	Track Width	6,0 m - 16,0 m
	Depending on format and level of competition	
	Start Criterias	
SA (m)	Start Area	Length 10,0 m Width 30,0 m
SP (m)	Start Platform Width depending on the start gate	Length min. 6,0 m Width 12,0 m (+/- 4,0 m)
SL (m)	Start Length (from start to first turn)	
	Level A	120,0 m
	Level B	100,0 m
	Level C	80,0 m
SI (°)	Start Inclination (to first bank)	6,0° - 8,0°
	Finish Criterias	
FL (m)	Finish Line (width)	15,0 m (+/- 5,0 m)
FA (m)	Finish Area Length	60,0 m (at 0,0 °)
FW (m)	Finish Area Width	min. 30,0 m
	Competition Level	
Level A	OWG, WSC, WJC, WC, YOG	
Level B	COC, UVS	
Level C	NC, FIS, EYOF, JUN	

2701.1 Vertical Drop

2701.1.1 Courses for all SBX events: must have a minimum vertical drop of 130 meters and a maximum vertical drop of 25 meters. The same course may be used for both men and ladies events.

2701.2 Length / Inclination

2701.2.1 The length of the course must be measured with either a measuring tape, wheel or GPS and has to be published on the start list and the results.

2701.3 Width

2701.3.1 The SBX slope must be a minimum of 40 m wide. In special cases the inspector or Jury can authorize exceptions for short parts of the course.

2701.4 Gates

2701.4.1 A snowboard cross gate consists of one stubby flex pole (turning pole) and one long slalom pole (outside pole) which are connected with a triangular gate flag (see also art. 2085 and 2089).

2701.4.2 Consecutive gates must alternate in color except banana gates (which are considered to be one turn therefore one color) which must be the same color gates and flags.

2701.4.3 The gates must be set so that the competitors can distinguish between them clearly and quickly even at high speed. The triangular gate flag of a gate should be set at right angles to the racing line.

2701.4.4 In certain circumstances competitors may be required to pass between two gates of the same color (for example: corridors).

2702 Courses

2702.1 General characteristics of the courses.

The slope should preferably be of a medium pitch (not flat/not steep-ideally 12,0° +/- 2,0° with varied terrain. The SBX slope must be a minimum of 40m wide (as wider as better). Under certain conditions, for short sections (50m or less) the course width may be a minimum of 20 m. The most important part is from the start to the first turn (approximately 80 meters straight depending on competition level) – where it should be not to steep (see 2701, Technical Data) a long flat area with features to separate the riders before the first bank.

The ideal SBX slope will allow for the construction of all or some of the following terrain features:
Banks (crescent shaped), Double Banks, Single, Double, or Triple Jumps Rollers, Offset Rollers - (Single, double, triple, etc.), Step-up jumps, spines and double spines, Pro style jumps, Hip jumps, Table top jumps, Step-down jumps. Medium or long GS type turns can be included (but not generally recommended) only when building a feature is not possible.
Other terrain features can be built, but competitor security considerations must always be a priority. Gap jumps are not permitted under any circumstances and a Snowboard Cross should not contain a corner jump at the last feature. The course and features should be designed so that competitors are attempting to gain speed and not having to break before each feature.

2702.2 **Course preparation**

The track should be closed to the public at least 20 hours before training. Terrain features and jumps must be built with sufficient time so that the snow has been compacted to insure that they can be properly maintained during training and competition. The use of artificial means is permitted (salt, water, etc.).

2703 Course setting

2703.1 The setting of the gates must be done before the official inspection and training and should incorporate the skilful use of the terrain with the integration of terrain features and jumps into the setting. Minor adjustments in the setting may be necessary during the training to adjust the course for a smooth competition line. Any changes made during training should be announced in the start area so all competitors and Team Captains are aware of any such changes.

2703.2 The total number of terrain features and jumps should be at the discretion of the course designer but will incorporate as many different possibilities as practical. Blind jumps or terrain features where a competitor is unable to see the landing from the take-off should be avoided. The course should be designed so as to separate the competitors as quickly as possible after the start (i.e. 3–5 rolls or other terrain features between the start and the first turn). These terrain features should be placed in a straight line from the start to the first turn. Minimum distance of the straight section of the course between the start and the first turn should be approximately 80 meters. The start should be relatively flat (12–14°).

2704 Inspection/Training

The competitors are allowed to inspect the course by slowly sliding down through or alongside the course. Inspection times are at the discretion of the Competition Jury but should be a minimum of 15 minutes. Competitors must visibly wear their start numbers and their helmets.
At least one training run prior to the actual competition is mandatory normally the training session should be 1–2 hours in length and if possible should be held the day before the actual competition (under certain mitigating circumstances the competition Jury may decide other possibilities).

2705 Execution of a Snowboard Cross

2705.1 **Qualification**

2705.1.1 *Timed runs are used to qualify competitors for the finals.*
For FIS competitions an additional format with a seeding process for finals can be conducted, instead of timed runs (see rule 2705.1.4)

2705.1.2 There are Four (4) timed qualification formats.
a) Qualification – One Run: -- all competitors take one (1) timed run.

b) Qualification – Two Runs – all competitors take two (2) timed runs – the

best time one (1) run out of two runs timed runs determines the qualification ranking.

Competitors who did not start (DNS) finish (DNF) or were disqualified DSQ in qualification run one (1) can participate in qualification run two (2).

c) Qualification – Two timed Runs in "Cut Down System"
- From Qualification run 1, the top 50% of the final seeding bracket positions will be ranked by time. (e.g. brackets 48 men, 24 qualified after 1. run, 24 ladies, 12 qualified after 1. run)
- Only the athletes not qualified from qualification run 1 will take a 2nd qualification run.
- Start order 2nd qualification run will be the same start order of the 1st qualification run taken out the already qualified athletes.
- The best qualification run of the two counts for the remaining athletes

d) Jam Session (Formula 1) Qualification – unlimited runs all competitors have unlimited runs in a fixed time period – the best time one (1) run out of this timed runs determine the qualification ranking.
Start order: Seeding in each system, depending on number of starters.
Maximum 64 competitors per heat.

2705.1.2.1 For the 2nd qualification run (regular 2 Run Format with all to 2nd Run) the top 16 competitor - both men and ladies will start in reverse order compared to the 1st qualification run. Competitors with start numbers 17 and higher will keep the same start position for the 2nd qualification run.

2705.1.3 Ties in Qualification for Finalists

If two (2) or more competitors have the same best time, the tie will be broken by their total time of the two (2) qualification runs. If they are still tied the tie will be broken using the highest current World Cup Standing (at World Cup competitions) or current FIS points (at OWG, WSC and FIS/CoC level competitions). If they are still tied all the competitors will receive the same rank but the competitor with the higher bib number will be ordered first. The following tie-breaking rules do not apply to competitors who are tied for the qualification rank of (16th / 24th ladies or 32nd / 48th men place). If two or more competitors are tied for the 16th / 24th and 32nd / 48th places, all competitors will run as many run-offs as required until the ties are broken. In this run-off format both (or more) competitors run together. This rule does not count for OWG. During OWG the run-off will be an individual run. In case of a tie, lane choice will be decided by draw at the start.

2705.1.4 Seeded groups without timed runs

The competitors will be seeded according to their actual FIS Points standing.

2705.1.3.1 Ties in Qualification for Jam Session
If two (2) or more competitors have the same best time, the tie will be broken by their total time of the best two (2) qualification runs.

2705.1.3.2 Ties in Qualification with “cut down system”
If two (2) or more competitors have the same best time, the tie will be broken by their total time of the two (2) qualification runs. If they are still tied the tie will be broken using the highest current World Cup Standing (at World Cup competitions) or current FIS points (at OWG, WSC and FIS/CoC level competitions). If they are still tied all the competitors will receive the same rank but the competitor with the higher bib number will be ordered first.
If athletes are tied on the last position of qualification run one, all will be directly qualified for the finals. The starter field for the second qualification run will be reduced accordingly.
If athletes are tied on the last position of qualification run two (16th/24th ladies or 32nd/ 48 men place), all competitors will run as many run-offs as required until the ties are broken. In this run-off format both (or more) competitors run together.
This rule does not count for OWG. During OWG the run-off will be an individual run. In case of a tie, lane choice will be decided by draw at the start.

2705.2 Finals

2705.2.1 Finals are based on 48 men / 24 ladies / 6 riders per heat or 32 men / 16 ladies / 4 competitors per heat or such other numbers as determined by the Jury. In special circumstances 64 men and/or 32 ladies are allowed.

2705.2.2 SBX will be run according to a single knockout format.

2705.2.3 The first 3 competitors (6 riders per heat) or first two 2 competitors (4 competitors per heat) advance from round to round as determined by their place of finish in each heat. Place of finish is determined by the first part of the body or Snowboard that crosses the finish line. Whenever possible, a finish line camera (video or photo finish) should be available. In case of a tie, at the finish line, such tie(s) will be broken after reviewing if available the photo-finish presentation If a tie still exists, the competitors concerned will be ranked according to the fastest qualification time. In the case where the same qualification time exists (best time out of two runs), the tie will be broken by using the total time of both qualification runs. If a tie still exists, the competitor with the higher bib number (based upon qualifying time) will be scored as first.

2705.2.4 The competitors who do not advance in 1/8 finals heats will be grouped according to their placing in the heat and then ranked within that group according to their qualifying time... In any case a competitor who has qualified for a certain group (1/8 final, 1/4 final, etc.) will remain in this group and be ranked there. For example: Once a competitor is qualified for top 16 they will remain for scoring purposes in the top 16 group.

2705.2.5 If two (2) or more competitors do not finish or are disqualified (pushing, holding, missing a gate etc.) they will be ranked according to the length of

the course finished – determined by the number of gate negotiated. If two (2) or more competitors do not finish the course, stop or fall or were disqualified at the same gate, the qualification rank will be utilized to determine their position at the end of the heat.

2705.2.6 The finals for the competitors qualified as per rule 2705.1.4 will be conducted as follows: The first two 2 competitors per heat advance from round to round as determined by their place of finish in each heat.
Place of finish is determined by the first part of the body or Snowboard that crosses the finish line. Whenever possible, a finish line camera (video or photo finish) should be available.
In case of a tie, at the finish line, such tie(s) will be broken after reviewing if available the photo-finish presentation. If a tie still exists, the competitor with the higher bib number (based upon qualifying time) will be scored as first.

The competitors who do not advance in their heats will be grouped into a new heat bracket. The ones who got 3rd in their heat will compete against each other and the ones who got 4th correspondingly.
Competitors who placed 3rd or 4th in 1/16 Finals will compete for a placing in the Quarter Finals and the Finals (or small Finals) for the places 33-64.
The competitors who finished 3rd or 4th in 1/8 Finals will conduct a placing in the Semi Finals and the Finals (or small Finals) for the places 17-32.
Competitors who not got 3rd or 4th in the 1/4 Finals will compete for a placing in the Semi Finals and Finals (or small Finals) for the places 9-16.
If there are more than 64 competitors, the looser rounds are limited to a maximum of two additional rounds and after those rounds the competitors will be tied at their respective positions.

2705.3 Ranking for final results

The competitors who participate in the qualification will be ranked according to their qualification result.

Ties for competitors which are out of the competition (do not advance to Finals) will remain as final results and listed with the same rank already on the partial result lists (Qualification Result List)

2705.4 Bibs / competitors identification

2705.4.1 Numbered bibs with numbers on front, back and sleeves for better visibility by the course Judges should be utilized.

2705.4.2 The bib numbers for the qualification start from 17 or 33 (depending on the finals parings). The lower numbers are reserved for the finals.

2705.4.3 To aid in competitor identification (competitors 4–6) different coloured bibs, arm or leg bands may be used in addition to competition bibs. They should be placed on the front arm or leg for better visibility. If coloured bibs will be utilized (see art. 2707.2)

2705.5 Gate Judges

Between 4-8 Gate Judges (with control section gate Judges being provided radios connected with the Finish Referee and the rest of the Jury) on a

SBX is necessary. Control section gate judges must be familiar with the rules (Inspection, Training, Gate-DSQ´s, Contact etc.).

2705.6 Competition Clothing.

SBX competition suits must be two piece – pants and separate top. Form fitting speed or downhill suites are not permitted. Non protruding body protection and padding is recommended. Protective equipment i.e. back protection must be worn on the body. No straps, fastening devices or other methods can be used to tighten the suit material closer to the body.

2706 SBX Finals Parings

Pairings for the finals will be according to the following:

2706.1 FINALS

Ranking for 8 heats/4 per heat (32) MEN

Heat #	1st position	2nd position	3rd position	4th position
1	1	16	17	32
2	8	9	24	25
3	5	12	21	28
4	4	13	20	29
5	3	14	19	30
6	6	11	22	27
7	7	10	23	26
8	2	15	18	31

2706.2 Ranking for 4 heats/4 per heat (16) LADIES

Heat #	1st position	2nd position	3rd position	4th position
1	1	8	9	16
2	4	5	12	13
3	3	6	11	14
4	2	7	10	15

2706.3 Ranking for 8 heats/‘ per heat (48) MEN

Heat #	1st position	2nd position	3rd position	4th position	5th position	6th position
1	1	16	17	32	33	48
2	8	9	24	25	40	41
3	5	12	21	28	37	44
4	4	13	20	29	36	45
5	3	14	19	30	35	46
6	6	11	22	27	38	43
7	7	10	23	26	39	42
8	2	15	18	31	34	47

2706.4 **Ranking for 4 heats/6 per heat (24) LADIES**

Heat #	1st position	2nd position	3rd position	4th position	5th position	6th position
1	1	8	9	16	17	24
2	4	5	12	13	20	21
3	3	6	11	14	19	22
4	2	7	10	15	18	23

2706.5 **Ranking for competitors qualified as per rule 2705.1.4**

2707 Start

2707.1 *Start Ramp and Start Gates*

The start ramp shall be prepared in such a way that the competitors can stand relaxed on the starting line and can quickly leave the start. Push off posts must be installed – part of the start gate – for all competitions.
The specifications will be adjusted to the needs of the specific competitions. The four/six start boxes have to open simultaneously and it must be impossible for a competitor to open the gates himself. The starting block (behind the board) must be covered with Teflon to protect the board. The System should be mechanical controlled for reasons of reliability and portability. Therefore, electronic systems are not approved unless authorised by the FIS. All start deviced for FIS World Cup, World Championships and Olympic Winter Games need to be approved by the FIS.

The measurements should be as follows:

Width between the gates: 90–100 cm
(recommended 100 cm)
Height of the board: 30–40 cm
(recommended 40 cm)
Width between handles: 80–90 cm
(recommended 80 cm)

Length of the handles: 10 cm\
Width of handles: 3–4 cm
(recommended 4 cm)
Adjustablity “Handles”: Yes
Distance between the gates: 5–60 cm
(recommended 60 cm

2707.2 *Start lanes – Two Formats*

Each starting position is identified by colour and/or number. Looking down the course the positions are set from left to right.
Colours: red–green–blue–yellow (white black)
Numbers: 1 – 2 – 3 – 4 – (5 – 6)

Colours are determined by qualification ranking(time) in each heat:
1st ranked Qualification competitor – Red
2nd ranked Qualification competitor – Green

3rd ranked Qualification competitor – Blue
4th ranked Qualification competitor – Yellow
5th ranked Qualification competitor -White
6th ranked Qualification competitor -Black

2707.3 *Choice of Starting lane*

The choice of the starting lane, during each heat is based upon the qualification ranking (time). First ranked competitor from the qualifications can chose their lane, with the second fastest the next lane and so on.
A missed start is considered a disqualification / sanction. It is the competitors responsibility to arrive at the start in time to compete (see rule 2022).

2707.4 *Start Command*

Riders ready – attention" – randomly 1–4 seconds before the doors open (this 1-4 seconds is up to the starter).

2707.5 *False start or malfunction of the start gate*

Disqualification / Sanctions will take place:

–When a competitor manipulates the starting gates

–When a competitor's board passes the starting line (vertical plane) before starting signal has been given (opening of the door)

–When the starting gate has clearly been blocked because of technical malfunction before the start signal was given, the start must be repeated.

- When the starting gate is opened by one of the competitors and not by the starter because of a technical malfunction the start must be repeated.

2708 Contact

Intentional contact by pushing, pulling or other means which causes another competitor to slow down, fall or exit the course is not allowed and is an automatic disqualification sanction. Unavoidable "casual contact" may be acceptable. All contact infractions will be at the discretion of the course Judges and competition Jury.

2709 Protests

2709.1 Report of Protests

Disqualification / Sanctions will be announced and/or posted immediately after each heat at a designated area at the bottom and/or top of the course.
All protests must be reported to the Chief of Finish and or another Jury member or to a jury appointed person (which is announced at the Team Captains meeting) before the next heat begins. Protests received after this time will not be accepted. A competitor does not need to stop their run and/or raise their hand if they think that they have been interfered with by another competitor in order to have the right to protest Protests need not be in writing but all other ICR rules for protests will apply. The protest fee must be paid at or before the conclusion of the competition.

2709.2 Handling of Disqualifications / Sanctions caused by intentional contact

If a competitor is disqualified /sanctioned because of intentional contact, they will be automatically ranked as last in their heat. All other competitors, even if they are victims of this intentional contact, will be ranked as they came into the finish.

It is not allowed to do re-runs in SBX in cases of intentional contact(s). Re-runs will only be consider by the Jury in the case of force majeure or if the competitor(s) were interfered with by other persons or circumstance outside of that presented by fellow competitors in that heat.

2710 Final Ranking

2710.1 Six Person Format

Competitors 1 to 6 are ranked according to their place of finish in the final heat. Competitors 7-12 are ranked according to their place of finish in the consolation round. All remaining competitors' are ranked according to the round they go out in (e.g. quarter finals) Within the round they are ranked first by their placing (4th, 5th, 6th) and then by their qualification times within that group (example: all 4th place finishers in the quarter final would be ranked, according to their qualification times, ahead of all 5th places finishers; and all 5th place finishers would similarly be ranked ahead of all 6th place finishers)

2710.2 Four Person Format

Competitors 1 to 4 are ranked according to their place of finish in the final heat. Competitors 5 to 8 are ranked according to their place of finish in the consolation round. Within the round they are ranked first by their placing (3rd, 4th) and then by their qualification times within that group (example: all 3rd place finishers in the quarter final would be ranked, according to their qualification times, ahead of all 4th place finishers).

2710.3 DNS, DSQ, DNF in SBX Finals

If a competitor does not start in the round of 32 or the round of 16 they will be automatically ranked in the 32nd or 16th position. If two or more competitors do not start, the DNS competitors only will be ranked on $31/32^{nd}$ ($15/16^{th}$) place according to their qualification times and so on with 3 or more DNS competitors. Order of placing: DNF/DSQ (sports disqualification) to be ranked 4th place in the heat according the qualification time. If two competitors are DNF/DSQ, they will be ranked in the heat on $3^{rd}/4^{th}$ position according to the qualification time. DSQ (intentional contact, etc.) to be ranked second at the end of the 4th ranked athletes and DNS to be ranked last.

2711 Snowboard Cross Team (SBX Team)

2712 Technical Data

The same rules apply for vertical drop, length/inclination, width and the use of gates as for a regular SBX event (Rule 2701.1 – 2701.4.4)

2713 Courses

The same rules apply for general characteristics of the courses and course preparation as for a regular SBX event (Rule 2702.1-2702.2)

2714 Course setting

The same rules apply for course setting as for a regular SBX event (Rule 2703.1-2703.2)

2715 Inspection/Training

the competitors are allowed to inspect the course by slowly sliding down through or alongside the course. Inspection times are at the discretion of the Competition Jury but should be a minimum of 15 minutes. Competitors must visibly wear their start numbers and their helmets. At least one training run prior to the actual competition is mandatory but if possible warm up should last at least 30 minutes.

2716 Execution of a SBX Team

2716.1 Qualification

The most current World Cup Standing List or FIS points list (whichever is higher) will be used to determine the participating nations teams. The list is cut off at the top 60 men and top 30 women in any case. The list is sorted by Nation and ranked highest to lowest within each nation. The points are combined for all nation pairs of athletes from top to bottom.

The nations teams are ranked by points and teams are chosen for entry by moving down the list choosing the highest ranked team from each nation first, then starting at the top of the list again to choose the second (if any) ranked team from each nation, repeating as necessary, until 8 teams for women and 16 teams for men have been reached.

2716.2 Seeding

Teams will be ranked according to team points for purposes of seeding into standard World Cup SBX brackets.

2716.3 Teams field

Once the nation teams qualification and seeding is determined, each nation can field any eligible athlete (*) into those teams, although each athlete is only eligible to compete on one team. Nations must declare which athletes will comprise each team at the seed meeting for the competition start. Nations determine by themselves which teammate will run 1st and 2nd. Similar to regular SBX, lane choice is determined by each nation team seed, within each heat. Teams will declare which teammate will run 1st after the teams have declared lane choice. Lane choice will be declared in the following order; seed 1, seed 2, seed 3, seed 4, and then teammate running order will be declared in the following order; seed 4, seed 3, seed 2, seed 1.

* Minimum requirements are top 60 WC Standing List for men and top 30 WC Standing List for women. Furthermore all participants have to be entered as a part of their nation's regular quota for SBX..

2716.4 Competition

In a SBX Team event the first competitor from each team wears a transponder on their front leg below the knee and above the ankle. All of the first competitors from each team line up in the start and the traditional SBX start cadence is given with all gates opening at the same time. As soon as these competitors leave the start the gates are closed and their teammates line up again. When the first competitor from a team crosses the finish line the transponder sends a signal to the start gate that opens just the individual start gate for their teammate. In the case that the 1st teammate does not finish (DNF) the 2nd teammates gate will not open. The first two teams who`s 2nd teammate crosses the finish line will advance to the next round.

2716.5 Bibs / Competitors identification

2716.5.1 Numbered bibs with numbers on front, back and sleeves for better visibility by the course judges should be utilized.

2716.5.2 To aid in competitor identification different coloured bibs have to be used. Nation outfits are allowed but these outfits clearly need to distinguish the various riders/teams. If coloured bibs will be utilized the following colours have to be used: red – green – blue - yellow . –white -black

2716.6 Gate Judges

The same rules apply for the use of gate judges as like in a regular SBX event (Rule 2705.5)

2716.7 Competition Clothing

The same rules apply for competition clothing as like in a regular SBX event (Rule 2705.6)

2717 Start

The same rules apply for start ramp, start gates and start lanes as like in a regular SBX event (Rule 2707.1-2707.2) as well as for start command, false start or malfunction of the start gate (Rule 2707.4-2707.5)

2717.1 Choice of start lane

The choice of the start lane, during each heat is based upon the seeding position. Higher seeded teams can choose their lane first. A missed start is considered a disqualification / sanction. It is the competitors responsibility to arrive at the start in time to compete (see rule 2022)

2717.2 Start Stop

In the case of a crash while the 1st teammates are on the course, where the crashed competitor(s) remain in an unsafe position on course, it may be necessary to stop a heat before the gates of the 2nd teammates open. In this instance the results of only the 1st teammates will stand for that

heat. In the case where there is only one finisher, then the one team who`s 1st teammate finished advances. Once the course has been safely cleared the other 3 teams 2nd teammates will compete with all gates opening at the same time to see which team advances 2nd. A team which has been disqualified cannot continue to participate. A start stop during a SBX team event can only be given by the Race Director who should therefore have clear visibility of the whole course.

2718 Contact

The same rules apply for contact as like in a regular SBX event (Rule 2708)

2719 Protest

The same rules apply for Protests as like in a regular SBX event (Rule 2709-2709.2)

2720 Final Ranking

2720.1 Four person format

Teams 1-4 are ranked according to their place of finish in the final heat. Teams 5-8 are ranked according to their place of finish in the consolation round. All remaining teams are ranked according to their seeding position.

2720.2 DNS, DSQ, DNF in SBX Team Finals

If a team does not start in the round of 16 or 8 they will be automatically be ranked in the 16th or 8th position. If two or more teams do not start, the DNS teams will be ranked 16/15th or 8/7th according to their seeding position and so on with 3 or more DNS teams.
Order of placing: DNF/DSQ (sports disqualification/sanctions) to be ranked first, DSQ (intentional contact, etc.) to be ranked 2nd, and DNS to be ranked third.

2800 Big Air

2801 Technical Data

Code	Big Air Criteria	Measurement
	Start Criterias	
SA (m)	Start Area	Length min. 5,0 m
DW (m)	Drop-in Ramp Width	min. 5,0 m
DP (m)	Drop-in Platform Length	min. 5,0 m
DL (m)	Drop-in Ramp Length	min. 30,0 m
DI (°)	Drop-in Ramp Inclination	min. 20,0 °
DF (m)	Drop-in Ramp Flat, light transition	5,0 - 10,0 m
	area before jump	
	Jump Criterias	
JH (m)	Height of Jump. (bottom part of the	min. 2,0 m
	flat to the top of kicker)	
JT (°)	Take-off Angle of Jump	min. 25,0°
JW (m)	Width of Jump	min. 5,0 m
	Landing Criterias	
LF (m)	Take-off to Landing	min. 10,0 m
	for Level A	min. 15,0 m
LI (°)	Landing Inclination	
	according to take-off	min. 28,0°
LW (m)	Landing Width	min. 20,0 m
LL (m)	Landing Length	min. 35,0 m
	Finish Criterias	
FA (m)	Finish Area Length	30,0 m (min. 20,0m)
FW (m)	Finish Area Width	30,0 m (min. 20,0m)
	Competition Level	
Level A	OWG, WSC, WJC, WC, YOG	
Level B	COC, UVS	
Level C	NC, FIS, EYOF, JUN	

2802 Big Air Site

2802.1 The Big Air site must conform to the applicable FIS technical data (see art. 2801).

2802.2 The Big Air site must be finished and ready for training at least one day before the start of competition. The drop in allows the competitor(s) to adjust their speed for the jump and the landing should have sufficient angle to accommodate both flips and spins.

2802.3 Only maneuvers on the official kicker will be scored, no maneuvers above or below the official kicker will be scored.

2803 Training

Training for the Big Air is mandatory. There will be a starter at training to regulate the flow of the competitor's. Training times will be communicated by the Jury (TD or Chief of Competition) during the first Team Captains meeting.

2804 Competition Format

2804.1 Standard Format

Qualification 1st run:	Men/ Ladies	All Participate	1–6 Qualify to finals 1–3 Qualify to finals
Qualification 2nd run: (start order is reverse of rank from Q1)	Men/ Ladies	7–25 or 7–all 5–20 or 5–all from 1st Q Participate	1–6 Qualify to finals 1–34 Qualify to finals
Finals 1st Run (start order is revers of Q2 and then Q1 rank)	Men/ Ladies	12 Participate 6 Participate	
Finals 2nd Run	Men/ Ladies	12 Participate 6 Participate	
Finals 3rd Run	Men/ Ladies	12 Participate 6 Participate	
Final Rank as follows	Men/ Ladies	1–12 1– 6 13–25 / 7–20 26..... / 21……	Best 2 runs out of 3 Qualification nr 2 Qualification nr 1

2804.2 Qualifications - Elimination rounds

The qualifications will be organised the same day of the finals.
The starting order (ladies or men first) shall be communicated during the first TC meeting. The qualification shall be organised in 2 runs as follows:

- 1st round: All competitors shall start. Out of the first round the top five (5) men s and the top three (3) ladies scores shall advance to the finals.
- 2nd round: Out of the second round all remaining competitors shall start and the top five (5) men and the top three (3) ladies scores shall qualify for the finals.

2804.3 Finals

2804.3.1 Best 2 runs out of 3 Judged Runs

In the finals the twelve (12) men and the six (6) ladies finalists will have the opportunity to take three runs. Only the two highest individual scores will count. The winner will be determined by the competitor with the two highest combined scores of the three judged runs.

2804.3.2 *Best 1 run out of 2*

A best one (1) out of two (2) run final is also permitted. In this case the 2nd final run should start in reverse order of the results of the 1st final run, subject to the determination of the Jury.

2804.4 Heat Format

2804.4.1 *Qualification:*

Competitors will be grouped into heats of:
Men: 5–35 per heat, Ladies: 5–25 per heat.

2804.4.2 *The seeding will be done as follows:*

- Number of heats will be decided by the Jury before the TC meeting, based on time and the number of entered participants in the competition.
- Competitors will be ranked according to their highest ranking on the current FIS WC, CoC points list or FIS points list in Big Air. (If competitors are tied the higher points in the second category will decide their position. If they are still tied their position will be decided by draw). In FIS WC competitions the competitors can be ranked using the World Snowboard Points List instead. Which list will be utilized has to be announced prior to the Team Captains (Draw) Meeting.
- If a two heat format is used, the competitors will be divided into groups of even and odd ranking as illustrated below:
  Heat 1: Ranking 1, 3, 5, 7 etc. Heat 2: Ranking 2, 4, 6, 8 etc.
- If a three heat format is used, the competitors will be divided into groups of even and odd ranking as illustrated below:
  Heat 1: Ranking 1, 4, 7 etc. Heat 2: Ranking 2, 5, 8 etc.
  Heat 3: Ranking 3, 6, 9 etc.
- Each heat will receive a warm-up period of 15-30 minutes (Subject to determination by the Jury). The two (2) qualification jumps will directly follow the applicable warm-up period with the best jump to count.

2804.4.3 *Qualification to Final will be as follows:*

Men / Ladies

With a two heats format: minimum top six (6) men and minimum top three (3) ladies ranked competitors from each heat will advance to the finals.
With a three heats format: minimum top four (4) men and top two (2) ladies ranked competitors from each heat will advance to the finals.

2804.4.4 Finals: **(minimum 12 Men / minimum 6 Ladies – best 2 runs out of 3)**

In the finals, minimum twelve (12) men and minimum six (6) ladies will have the opportunity to take two or three jumps. Only the two highest individual scores will count if three jumps are performed. If only two jumps are performed, highest individual score will count.

Start order for final jump 1:
In case of two (2) heats the competitors will be seeded according to their results in the qualifications. Ranked 1st of each heat will start as last and second last in Finals based on their qualification scores. Ranked 2nd from

each heat will start as third last and fourth last based on their qualification scores etc.

In case of three (3) heats the competitors will be seeded according to their results in the qualification. Ranked 1st from each heat will start at last, second last and third last based on their qualification scores. Ranked 2nd from each heat will start as fourth, fifth and sixth last based on their qualification scores.

Start order for final jump 2:
The start order for final jump 2 is the same as final jump 1.

Start order for final jump 3:
The number of athletes that will take a third jump can be varied according to Jury decision prior to the event.
Start order will be the same order as final jump 1 and 2.

Ranking:
The final score of each competitor will be the two highest scores from of the 3 jumps performed. These two jumps must be different. If only two jumps are performed the highest individual score will count

Different jumps are defined as follows:
- a different direction of approach to the jump i.e. regular / normal stance or switch stance.
- a different direction to take off i.e. Frontside or Backside
- Straight front flips / straight back flips

2804.5 Knockout Competition Format:

2804.5.1 Qualification:
Competitors will be grouped into heats of: Men: 15–30 per heat

2804.5.2 The seeding will be done as follows: (see art. 2804.4.2)
- Number of heats will be decided by the Jury before the Team Captains meeting, based on time and entered participants on the competition.
- Competitors will be ranked according to their highest ranking on the current FIS WC, CoC points list or FIS points list in Big Air. (If competitors are tied the higher points in the second category will decide their position. If they are still tied their position will be decided by draw.) In FIS WC competitions the competitors can be ranked using the World Snowboard Points List instead. Which list will be utilized has to be announced prior to the Team Captains (Draw) Meeting.
- If there are two heats, the competitors will be divided within even and odd rankings:
- Heat 1: Ranking 1, 3, 5, 7 etc.Heat 2: Ranking 2, 4, 6, 8 etc.
- If there are three heats, each third competitor will be placed in each heat from the rankings:
  Heat 1: Ranking 1, 4, 7 etc. Heat 2: Ranking 2, 5, 8 etc.
  Heat 3: Ranking 3, 6, 9 etc.

– Every heat will receive a warm-up period of from 15-30 minutes (decided by the Jury), to be directly followed by the two (2) qualification jumps with the best scored jump of the two (2) to count.

2804.5.3 *Qualification to Final will be as follows:*

Men

With two heats: top eight ranked competitors from each heat.
With three heats: top five ranked competitors from each heat + the top one following highest scored competitors from all the remaining competitors.

Finals: (16 men – head to head)

Pairing for Head to Head final

Pair 1: Place 1 – Place 16
Pair 2: Place 8 – Place 9
Pair 3: Place 5 – Place 12
Pair 4: Place 4 – Place 13
Pair 5: Place 3 – Place 14
Pair 6: Place 6 – Place 11
Pair 7: Place 7 – Place 10
Pair 8: Place 2 – Place 15

2804.5.4 *A head to Head final consist of:*

– 1/8-finals
– 1/4-finals
– 1/2-finals
– small and big finals

– **1/8-finals**

The winners of the 1/8-finals pairs qualify to the 1/4-finals

– **1/4-finals**

The winners of the 1/4-finals pairs qualify to the 1/2-finals

– **1/2-finals**

The winners of the 1/2-finals pairs qualify to the big final
The losers of the 1/2-finals pairs qualify to the small final

– **Small and Big Finals**

The winner of the big final will be ranked 1st
The loser of the big final will be ranked 2nd
The winner of the small final will be ranked 3rd
The loser of the small final will be ranked 4th

– Two jumps / best jump to count
– Winner goes further
– Highest score from Qualifications will start as No. 2 throughout the finals
– Rank 1–2: Ranking from Big Final
– Rank 3–4: Ranking from Small Final

– Rank 5–8: Ranking from Qualification results
– Rank 9–16: Ranking from Qualification results

2804.5.5 The competitor can only perform a maximum of two (2) of the same tricks during the knock-out format in finals (maximum of four (4) winning jumps).

If a competitor performs the same trick more than two (2) times during the finals the second highest trick will be counted. If it still is the same trick as earlier performed, the jump will receive a JNS, JNS – Jump Not Scored.

Finals: (minimum 12 men / minimum 6 Ladies – best 2 runs out of 3)
Different jumps are defined as follows:
– A different direction of approach to the jump i.e. Regular/normal stance or switch stance.
– A different direction of take off i.e. Frontside or Backside
– Straight front flips / straight back flips.

2804.6 Knockout Competition Format with Semi-Final

2804.6.1 Qualification:

Competitors will be grouped into heats of:	Men	15 - 30 per heat
	Ladies	15 - 25 per heat

2804.6.2 The seeding will be done in the following manner:
– The number and size of heats will be decided by the Jury before the Team Captains meeting based upon time and entered number of participants in the competition.
– If a semi-final format will be used such decision will be made by the Jury before the Team Captains meeting, based on the time and entered number of participants in the competition.
– Competitors will be ranked according to their highest ranking on the current CoC points list or FIS points in Big Air.
If competitors are tied the higher points in the second category will decide their position. If they are still tied their position will be decided by draw. For FIS WC Level, competitors will be ranked using the World Snowboard Points List.
– If there will be two heats, the competitors will be divided within even and odd rankings:
– Heat 1: Ranking 1,3,5,7 etc. Heat 2: 2,4,6,8 etc.
– If there will be three heats, each third competitor will be placed in each heat from the rankings.
– Heat 1: Ranking 1,4,7 etc. Heat 2: 1,5,8 etc. Heat 3: 3,6,9 etc.
– Every heat will receive a warm-up period of from 15-30 minutes (decided by the Jury) to be directly followed by the two (2) qualification jumps with the best jump of the two (2) to count.

2804.6.3 *Qualification directly to Final will be as follows:*

Men

With two heats: top 4 ranked competitors from each heat (4+4=8)
With three heats: top 3 ranked competitors from each heat (3+3+3=9)

Ladies

With one heats: top 4 ranked competitors (4)
With two heats: top 2 ranked competitors from each heat (2+2+4)

2804.6.4 *Semi-final qualifier to Final will be as follows:*

Men

th two heats: Ranking 5–12 from each heat (8+8=16)
With three heats: Ranking 4–8 from each heat (5+5+5=15)

Ladies

With one heat: Ranking 5–13 from that heat (8)
With two heats: Ranking 3–6 from each heat (4+4=8)

Competitors will receive two more jumps and the best one will count and the following competitors will advance to the finals

Men

With two heats: Top ranked competitors 1–8
With three heats: Top ranked competitors 1–7

Ladies

With one heat: Top ranked competitors 1–4
With two heats: Top ranked competitors 1–4

2804.6.5 *Finals:*

Men

(16 men – head to head)
Parings for Head to Head final:
Pair 1: Place 1 – Place 16
Pair 2: Place 8 – Place 9
Pair 3: Place 5 – Place 12
Pair 4: Place 4 – Place 13
Pair 5: Place 3 – Place 14
Pair 6: Place 6 – Place 11
Pair 7: Place 7 – Place 10
Pair 8: Place 2 – Place 15

Ladies

(8 ladies – head to head)
Parings for Head to Head final:
Pair 1: Place 1 – Place 8
Pair 2: Place 4 – Place 5
Pair 3: Place 3 – Place 6
Pair 4: Place 2 – Place 7

2804.6.6 *A Head to Head final consist of:*

– 1/8-finals
– 1/4-finals
– 1/2-finals
– small and big finals

– 1/8-finals

The winners of the 1/8-finals Pairs qualify to the 1/4-finals.

– 1/4-finals

The winners of the 1/4-finals Pairs qualify to the 1/2-finals.

– 1/2-finals

The winners of the 1/2-finals Pairs qualify to the big final.
The losers of the 1/2-finals Pairs qualify to the small final

– Small and Big Finals

The winner of the big final will be ranked 1st.
The loser of the big final will be ranked 2nd.
The winner of the small final will be ranked 3rd.
The loser of the small final will be ranked 4th.

– Two jumps / best jump to count.
– Winner goes further.
– Highest score from Qualification will start as nr 2 throughout the finals
– Rank 1–2: Ranking from Big Final
– Rank 3–4: Ranking from Small Final
– Rank 5–8: Ranking from Qualification result
– Rank 9–16: Ranking from Qualification result

Big Air Competition format **Men**

Rider	1/8 final	Quarter F	Semi F	Small final	Final	Prize Giving
	Pair 1					
1						
16		QF 1				
	Pair 2					
8						
9			Semi 1			
	Pair 3					
5						
12		QF 2				
	Pair 4					
4						
13				Small Final	Final	
	Pair 5					
3						
14		QF 3				
	Pair 6					
6						
11			Semi 2			
	Pair 7					
7						
10		QF 4				
	Pair 8					
2						
15						

Two jumps / best count

Rank 1–2	Big Final
Rank 3–4	Small Final
Rank 5–8	Determined from Qual Result
Rank 9–16	Determined from Qual Result

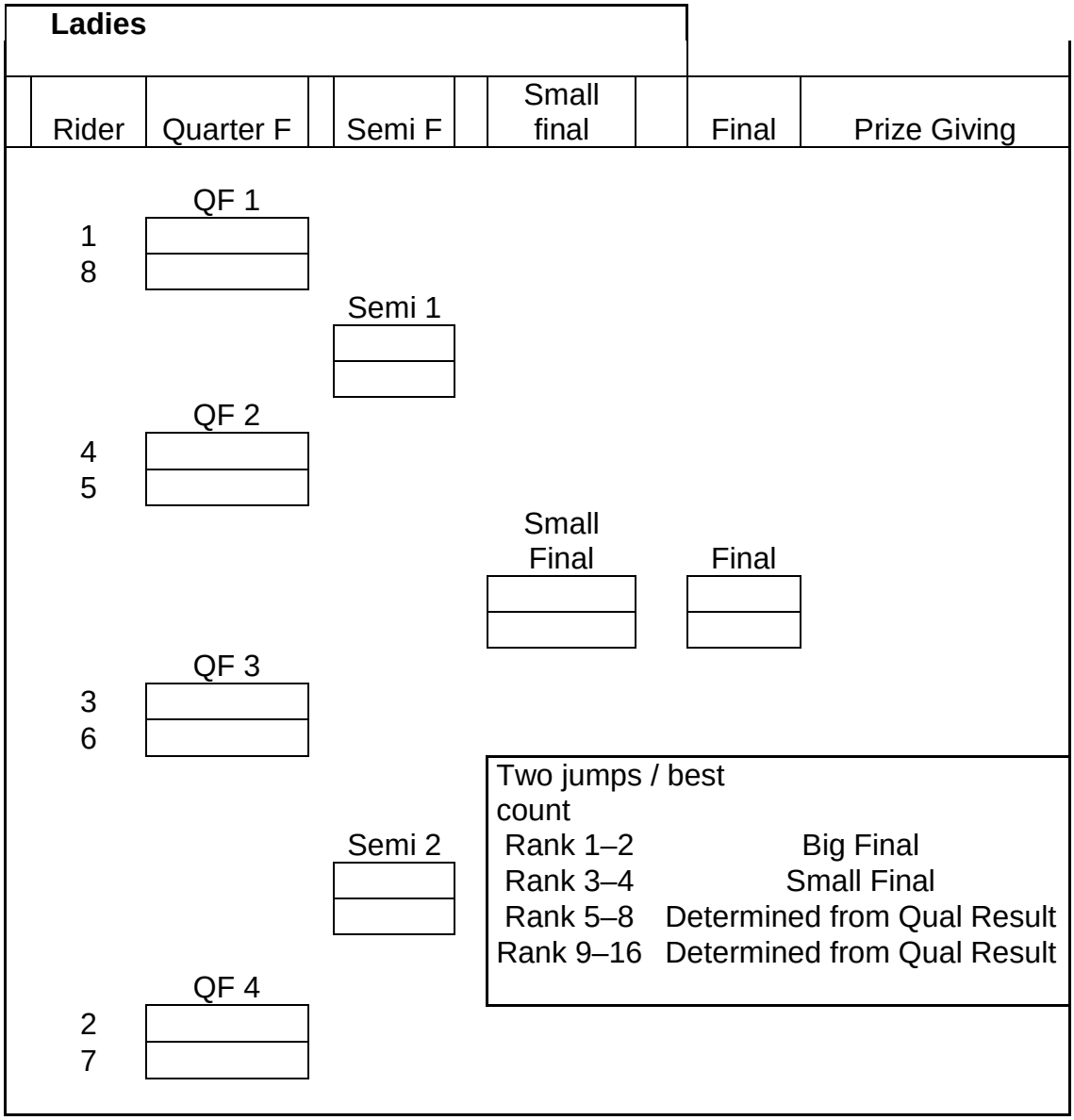

2805 Execution of a Big Air

All runs are scored in the Big Air contest unless marked as JNS “Jump Not Scored”. Since the limited field size impacts final standings the entire field of ten men and six ladies will be ranked. All other competitors will be ranked according to their highest score of the two elimination round jumps.

2806 Competitors Equipment

2806.1 Bibs

As per FIS specifications.

2806.2 Helmets

As per FIS specifications and requirements (see art. 2010.6)

2807 Public Address System

2807.1 Music will be used at Big Air events. The sound system must be powerful enough for the competitors to have the opportunity to hear the music while at the top of the Big Air course.

2807.2 The Chief of Sound is responsible for the tapes or CD's during the competition.

2808 Judges Stand

2808.1 The recommended specifications for the Judges Stand are 5-10 meters by 2-3 meters. The Judges viewing area should be constructed so as to provide ample room for the appropriate number of officials, to provide room for viewing and all proper amenities for the operation of the competition.

2809 Big Air Judging

2809.1 For each Big Air Event: Three (3) – six (6) judges shall independently evaluate the competitors performance based upon the judges criteria. If there are 6 scoring judges the high and low scores shall be discarded and the remaining scores will be counted. If there are 3 / 5 scoring Judges, all scores will count.

2809.2 Judges must determine scores during the Big Air events in accordance with the FIS Big Air Judging Criteria. They must be available to the Head Judge during preparation and throughout the competition.

2809.3 Judges can use score cards to mark scores by bib numbers and will keep a memory board to note the tricks, falls and other specifics scoring elements.

2809.4 No discussions are allowed concerning competitors scores unless initiated by the Head Judge.

2809.5 No competitor, team representative, or spectator will be allowed to approach the Judges stand or speak with the Judges during the competition.

2809.6 Any protest or problem arising from the judging will be dealt with by the Head Judge and the competition jury.

2809.7 Judges may not be assigned to competitions in which a family member is participating (grandparents, parents, children, brother, sister, husband, wife).

2809.8 The Judges Responsibilities and Duties

The main areas of the Judges responsibilities and duties are outlined in the Halfpipe section (art. 2615.1). The responsibilities and duties for the Big Air Judges are the same in principal as that which exists for Halfpipe and Slopestyle Judges.

2809.9 The Head Judges Responsibilities and Duties

The main areas of the Head judge responsibilities and duties are outlined in the Halfpipe section (art. 2615.2). The responsibilities and duties for the

Big Air Head Judge are the same in principal as that which exist for Half-pipe and Slopestyle Head Judges.

2810 Big Air Scoring System

2810.1 Each judge must use a 100 point system e.g: 2, 6, 87, 93 etc. .
Each judge can give a maximum of 100 points for each competitor. The scores of the Judges will be averaged for each competitor run, truncated after the second decimal and XX,XX out of 100 will be displayed as the total score for that particular run.

2810.2 All scores must be posted after each run.

2810.3 Tie breaking

If a tie exists, the competitor with the comparison of the two highest counting scores in the tied run shall be determined the winner. If they are still tied the comparison of the highest three scores in the tied run shall determine the winner. If they are still tied they will remain tied and the rider with higher bib will be ordered first.
Ties for competitors which are out of the competition (do not advance to Semifinals or Finals) will remain as final results and listed with the same rank already on the partial result lists (e.g. Qualification Results, Semifinals Results).
Ties occurring out of different heats will not be broken.

2810.3.1 Elimination Heats

If ties still exist after 2810.3, this will be done:
Heat 1: Competitors tied for 6th/4th place men and 3rd/2nd place ladies respectively will be qualified for the finals. When a tie such as this occurs the number of qualified competitors from Heat 2 will be reduced accordingly to allow 12 men and 6 ladies in the finals.
Heat 2: Ties in round two will be broken by the highest round 1 score. If still tied, the competitors ranked on the same final qualifying place will advance to the finals thus increasing the number of competitors in the finals.

2810.3.2 Finals (combined best two out of three jumps)

For a three run final the competitor with the highest single score (of the two combined scores used for the final ranking) will be the winner. If both of these are tied then the competitor with the highest non-combined score (3rd score) will be the winner. If a tie still remains, both competitors will remain tied and receive the same ranking.

2811 Judging Criteria

2811.1Overall impression (3-5 judges counting scores)
The judges take falls and other mistakes into consideration and can deduct up to 30 % of the points of the run/judge for each fall/stop. (See deduction scale: 2811.2)
Judges must have a good trick knowledge. Without understanding the trick, it must be very hard to finalize a result.
As an overall impression judge you must consider:

(These are not in any particular order)

Amplitude:
In Big Air, Amplitude is not just going “BIG” but landing the trick on the decided “sweet spot”. To have too much amplitude or to little amplitude in Big Air is dangerous and must also be considered by the judges. Showing good amplitude is by “popping” of the kicker and having a good trajectory in the air, not to flat. Exception is if you buttering of the kicker on purpose. Greater amplitude increases the risk of the trick.

Difficulty:
There is more than just the number of rotations that effects difficulty.

Judges consider:

- Switch take offs or landings,
- Frontside or Backside rotations,
- Take offs, on heel or toe,
- Different grabs
- Blind landings.
- Big or small kickers (if there is multiple choices)

Preforming grabs can change the difficulty of the trick. Boning or tweaking can increase the difficulty and also where you grab on the board and what hand during different rotations.

Execution:
Control should be maintained during the whole trick, from take-off to landings. The trick should be done with good stability and fluidity. The trick should be performed with full control. When an athlete decides to perform a trick, he should reach the position chosen and show that this is the position he wants. In rotations flips and different hybrids, the rotation should be done in one manoeuvre and control should be held, demonstrated in one unique movement with an equal rotational rhythm from beginning to the end. “The trick should look easy”.
If the intention of a grab is done, the grab should be made on the board. (not boot grab, Binding grabs etc…) Preformed grab/grabs are very important in all kind of manoeuvres and a missed or weak grab will influence the judges score radical.

Progression:
To have progression in our judge’s criteria’s, we push the sport forward. Try making tricks that nobody else is doing……

Landing:
Landing is the final part of the trick and a very important part. Landing must be done with full control and trick must have been completed. (See deduction scale: 2811.2)

Consideration

For a judge to “know” how hard tricks are, judges need to have a communication with athletes and coaches to see their opinion. This item should be discussed with coaches at official coaches meetings during the season. Not at each competition. Difficulty is very individual and athletes, judges and coaches may disagree with each other when discussing difficulty scales. But judges must have a clear opinion when working on a competition what is easy and what is hard.

2811.3 Deduction Scale

1 - 9	point for minor fault: hand rag
10 - 19	points for medium fault: two hands down, reversing the trick due to instability
20 - 29	points for major fault: body contact with the snow
30	points for huge faults: the board is not the first thing to touch the snow

A deduction by the Judges is taken from the score that would have been given with a correct completed landing.

For example a competitor, considered to be not under control in the air, could be awarded 45 points by a Judge for the trick and receive a 25 point deduction for a major landing fault, thus giving the competitor a score of 20.

Special Rules

2900 Competitions under Artificial Light

2900.1 The running of competitions under artificial lights is permitted.

2900.2 The lighting must meet the following specifications:

2900.2.1 The light level anywhere on the course may not be less than 80 lux, measured parallel to the surface. The lighting should be as uniform as possible.

In case the competition will be broadcasted on Television the level of lighting has to be checked with the responsible person for the television production. Special arrangements may need to be made.

2900.2.2 Lighting must be placed so that the light does not alter the topography of the slope. The light must show the competitor the exact picture of the terrain and must not alter the depth perception and exactness.

2900.2.3 Care should be taken that the lights cast only a minimal amount of the competitor's shadow into the racing line and should not blind the competitor by lighting glare.

2900.2.4 Obstacles and buildings in the immediate vicinity of the course must be clearly lighted.

2900.3 The TD together with the Jury must check ahead of time that the lighting conforms to the rules. The organisers shall provide the TD and Jury with light meters having cosine correction.

2900.4 The TD must submit a supplementary report on the quality of the lighting.

2900.5 The course setter must set the course on the section of the competition venue which provides the opportunity for the best lighting.

3000 SNOWBOARD SLOPESTYLE

3001 The Slopestyle

The competition will be held on a course with a variety of hits, jumps, rails, tables, big-airs, etc. with two or more lines that the competitors may choose to perform.

3002 Technical Data

Code	Slopestyle Criteria	Measurement
VD (m)	Vertical drop	
	Level A	min. 150,0 m
	Level B	min. 80,0 m
	Level C	min. 50,0 m
I (°)	Inclination, average	12,0° or steeper
SW (m)	Slope Width	30,0 m
TF (n°)	Type of features, all Levels	min. 2
SC (n°)	Sections, one or more features at the same location of the slope One judged hit can be evaluated	min.
	Level A	6
	Level B	4
	Level C	3
JP (n°)	Min. number of jump sections	
	Level A	3
	Level B	2
	Level C	1
	Start Criterias	
SA (m)	Start Area	Length 10,0 m
		Width 30,0 m
DW (m)	Drop-in Ramp Width	12,0 m +/- 4,0 m
DL (m)	Drop-in Ramp Length	min 6,0 m
	Finish Criterias	
FA (m)	Finish Area, length according to the construction and the speed of the last feature.	
FW (m)	Finish Area Width	min. 30,0 m
	Competition Level	
Level A	OWG, WSC, WJC, WC, YOG	
Level B	COC, UVS	
Level C	NC, FIS, EYOF, JUN	

3002.1 General characteristics of the course

The average slope inclination should be approximately 12 degrees. The slope should have a regular pitch, without marked variations of the inclination.

The Slopestyle course must be a minimum of 30 meters wide. The course must be a minimum of 100 and a maximum of 200 meters in vertical drop.

3002.2 Slopestyle course description

The Slopestyle course shall contain a variety of type of features (table top jumps, fun boxes, quarter pipes, waves/jumps, rails and ridges, or other feature types). It shall have different sections, with one or more features at the same location of the slope with at least one judged hit that can be evaluated. The course should have a minimum of) two (2) different features types and a minimum number of jumps and judged hits in total, according to the competition level, as below.

Competition Level	Min number of Jumps	Min number of Judged Hits
Level A	3	6
Level B	2	4
Level C	1	3

The course should not favour regular or goofy foot competitors while providing the competitors the opportunity to display their freestyle skills and talents. The distance between the features should allow a smooth transition and performance. The course should be designed to require a minimum run time of 20+ seconds. The features and the overall course should be designed in such a manner so as to allow usage by both men and ladies competitors.

The ideal Slopestyle course should be technically challenging, with a wide variety and balance of features in diverse combinations.

3002.3 Start and finish area

The start area must be flat and wide enough for competitors to prepare for the competition and for coaches, staff and media teams to work. The finish area must be width enough to provide the competitors a secure termination of their performance. The entire course should be visible from the finish area.

3002.4 Exceptions

Exceptions can be done for indoor or in-city events (indoor style or in-city style).

3002.5 Security considerations

Other features can be built but security consideration must always be a priority. There should be a minimum of two rescue/ first aid personnel at the start area at all times during practice and competition.

3003 Competition equipment

3003.1 Bibs

Bibs are distributed by the Organising Committee and may not be changed in shape or size. Freestyle bibs should be used. All bibs must be worn in the proper position at all session concerning the competition (inspection, training, qualification, finals and prize giving ceremony.

3003.2 Helmets

As per FIS Specifications and usage (see art. 2010.6)

3004 Execution of the Slopestyle

The qualification run(s) is/are part of the slopestyle competition.

The official results of the qualification run shall determine the qualified competitors for the finals. The number of competitors to qualify for the finals (maximum 24 men / 12 ladies) must be announced at the Team Captains Meeting held before competition commences.

Only the finals shall determine the final ranking for the qualified competitors

The official results will include:

− the ranking list from the qualification run(s)

− the final ranking of the qualified competitors from the finals.

The competition format can be alter between the heat format and the single format. The decision is taken by the Jury and must be announced at the Team Captains meeting.

If a competitor leaves the start (after the Head Judge has signified that the Judges are ready and the Starter gives the competitor a signal to start) the run will count and be judged as such (even if the competitor stops before the first hit – no rerun or restart will be allowed.

A competitor who is disqualified (DSQ) in qualification round 1 is not allowed and has no right to start in qualification round 2.

3004.1 Inspection / Training

The competitors are allowed to inspect the course by sliding down the course (without riding the features). Inspection times are at the discretion of the competition Jury. Competitors must wear their start numbers and helmets at all times during inspection, training and competition.

At least one (1) training run is mandatory prior to the actual competition. Training is recommended for a duration allowing all competitors to ride through the course a minimum of two (2) times). The Training, if possible, should be held the day before the actual event takes place (under certain circumstances the Competition Jury may decide on other possibilites).

3004.1.1 *Ranking:*

The competitors who participate in the qualification will be ranked according to their qualification result.

Ties for competitors which are out of the competition (do not advance to Semifinals or Finals) will remain as final results and listed with the same rank already on the partial result lists (e.g. Qualification Results, Semifinal Results)

3004.2 Competition Formats

3004.2.1 *Seeding*

Competitors ranked on the current FIS Points List 1-16 (men and ladies) will be randomly drawn in the first seed group and competitors ranked 17th through the end of the field will be randomly drawn for the second seed group during the team captains meeting.

In case, there are no competitors with FIS points on the start list, the entire field will be randomly drawn.

3004.2.2 *Single Format (Finals: one out of two and all for 2nd qualification)*
See Rule 2604.1 and Rule 26.04.1.1

3004.2.3 *Heat Format*
See Rule 2604.3

3004.2.4 *Double-up format*
See Rule 2604.4

3004.2.5 *Semi-Final Format*
See Rule 2604.6

3004.2.6 H*eat Competition Format with Semi Final*
See Rule 2604.7

3004.2.7 *Heat Competition Format with XX advancing to Final*
See Rule 2604.3

3004.3 Final (if not any of above formats are used for Finals)

3004. 3.1 *Finals: Open Session*

The finals can be an open session with a random running start order. All competitors have a time limit (recommended 1 hour) to use the course as many times as they want within that time limit. All runs will be scored during the open session. Only the highest score of each competitor will count toward the final ranking. Ties will be broken by the next highest score of the competitor. Utilization and duration of the open session format will be determined by the competition Jury and will be announced during the Team Captains meeting.

3004.5 Competition Jury

The Competition Jury for the Slopestyle consists of the following:

- Technical Delegate
- Chief of Competition
- Head Judge

3005 Public address system

Music will be used at Slopestyle events. The sound system to be used must be powerful and depending on the length of the course it should be possible for the competitors to hear the music clearly and without distortion while on any part of the course.

The Chief of Sound is responsible for adequate music.

3006 Judges Stand and Video Judging

3006.1 Judges Stand

The minimum size of the scaffolding area must be 5 meters by 2.5 meters. The Judges viewing area should be constructed so as to provide ample room for the appropriate number of officials and to provide room for viewing and all necessary amenities for the operation of the competition. The Judges stand needs to be elevated to give the best possible view of the complete Slopestyle course. If this is not possible, then a second judging stand will need to be constructed and the judging crew will need to be increased so as to view the entire course.

3006.2 Video judging

In upper level FIS competitions (OWG, WSC, WC, JOWG, JWSC) there will be video judging. Therefore minimum 2 big screens in the judges stand and feed from TV production is required, that covers the entire course with consistence, adequate technical images (athletes entire run including in-run, rails, airtime, landing, similar pictures etc.)

3007 Slopestyle Judging

3007.1 Number of Judges

Three (3)-six (6) Judges shall independently evaluate the competitors performance based upon the Judges criteria. If there are 6 scoring Judges, the high and low scores shall be discarded and the remaining scores will be counted. If there are 3 – 5 scoring Judges, all scores will count.

In the case where two (2) Judging stands are required, due to course length and viewing, the number of Judges can be increased to six (6), three (3) on each Judging stand plus the Head Judge. See Section 3006.

The total of the scores from each Judging panel will be average for final competitor's score.

3007.2 Overall impression

All judges will score the run by evaluating the run from start to finish with an overall precision. The judges evaluate the precise nature of the run in relation to maneuvers attempted, both individually and as a sequence. The overall composition of the run is very important as the judges evaluate the sequences of tricks, the amount of risk in the routine, and how the rider uses the course. The judges take falls, mistakes and stops into consideration and can deduct up to 20 % of the points of the run/judge for each fall/stop. (See deduction scale: 3007.4)
Judges must have a good trick knowledge. Without understanding the trick, it must be very hard to finalize a result.

As an overall impression judge you must consider:

(These are not in any particular order)

Amplitude:
For Slopestyle, amplitude is not just going “BIG” on the kickers but landing the tricks on kickers at the decided “sweet spot”. To have too much or too little amplitude on kickers is dangerous and must also be considered by the judges. Showing good amplitude on kickers is by “popping” of the kicker and having a good trajectory in the air, not too flat. Exception is if you buttering of the kicker on purpose.
Amplitude can also be considered by the “energy” on rails or other features in the Slopestyle course.
Greater amplitude increases the risk of the trick.

Difficulty:
There is more than just the number of rotations that affects the difficulty.

Judges consider:

- Switch take offs or landings
- Frontside or Backside rotations
- Take offs, on heel or toe
- Different grabs
- Blind landings
- Big or small kickers
- Hard combinations and the sequence of tricks
- Different rotation axis (Longitudinal/Lateral Axis, Vertical Axis)
- On or off the rails, how? Easy or Hard way, Nr of Rotations, Easy boxes or hard kink rails,

Preforming grabs can change the difficulty of the trick. Boning or tweaking can increase the difficulty and also where you grab on the board and what hand during different rotations.

Execution:

Control should be maintained during the whole run, from start to finish. The riding should be done with good stability and fluidity. Each individual trick should be performed with full control. When an athlete decides to perform a trick, he should reach the position chosen and show that this is the position he wants. In rotations flips and different hybrids, the rotation should be done in one manoeuvre and control should be held, demonstrated in one unique movement with an equal rotational rhythm from beginning to the end. "The trick should look easy".

If the intention of a grab is done, the grab should be made on the board and not anywhere else. (boot grab, Binding grabs etc…) Preformed grab/grabs are very important in all kind of manoeuvres and a missed or weak grab will influence the judges score radical.

Variety:

When the athlete preforms the run, variety must be a key factor. Mixing different tricks into a good run. Spinning different ways:

Backside/ Frontside, Left/Right, Longitudinal/Lateral Axis, Take offs and landings should be a mix of switch and normal. Grabbing the board with different grabs on different spins.

Progression:

To have progression in our judge's criteria's, we push the sport forward. Try making tricks that nobody else is doing……

Combinations/Flow:

Combination has a close overlap with Variety, to have good hard trick combinations between all different features in the slopestyle. The composition of the tricks must fit to be able to use the course in a proper manner.

Consideration

For a judge to "know" how hard tricks and combos are, judges need to have a communication with athletes and coaches to see their opinion. Difficulty is very individual and athletes, judges and coaches may disagree with each other when discussing difficulty scales. This item should be discussed with coaches at official coaches meetings during the season. Not at each competition. But judges must have a clear opinion when working on a competition what is easy and what is hard.

Preforming grabs can also change the difficulty degree of the trick. Boning or tweaking can increase the difficulty and also where you grab on the board and what hand during different rotations.

3007.4 Deductions

1 – 5	Minor mistake as : instable body during landings, possible small hand touch, using hands for stability and other instabilities.
6 – 15	Medium mistakes as: reverts light touch downs, heavy hand touches, body contact with snow.
16 – 20	Major mistakes as hard touch downs, falls, complete falls.

The deduction by the Judges is taken from the score that would have been given with a correct completed landing on the tricks.
For example a competitor, considered to be not under control could be awarded 45 points by a Judge for the run and receive a 20 point deduction for a major landing fault, thus giving the competitor a score of 25.

3007.5 General Criteria

Discussions by the Judges concerning competitor scores should be minimal in nature unless initiated by the Head Judge.

- No competitor, team representative or spectator may approach the judge's stand or speak with the Judges during the entire competition.
- Any protest or problem arising from the judging will be dealt with by the Head Judge and the competition Jury.

3008 Slopestyle Scoring System

3008.1 Point System

Each judge must use a 100 point system e.g. 2, 6, 87, 93 etc.

Each Judge can give a maximum of 100 points for each competitor. The scores of the Judges will be averaged for each competitor run, truncated after the second decimal and XX,XX out of 100 will be displayed as the total score for that particular run.

IPC ALPINE SKIING

International
Paralympic Committee

Alpine Skiing Classification Rules and Regulations

August 2015

IPC ALPINE SKIING

Official IPC Alpine Skiing Supplier

LISKI
SPORT EQUIPMENT

www.IPC-AlpineSkiing.org

@IPCAlpine

ParalympicSport.TV

/IPCAlpineSkiing

IPC ALPINE SKIING

IPC Alpine Skiing Classification Rules and Regulations

August 2015

International Paralympic Committee

Adenauerallee 212-214 Tel. +49 228 2097-200
53113 Bonn, Germany Fax +49 228 2097-209

www.ipc-alpineskiing.org
ipcalpineskiing@paralympic.org

IPC ALPINE SKIING

Table of contents

Table of contents 1

Purpose and organisation of these Rules 3

1 Article one - Scope and application 5

2 Article two – Classification personnel 7

3 Article three - Classification panels 10

4 Article four - Athlete evaluation 11

Athlete evaluation process 11

Athlete evaluation requirements 11

Failure to attend athlete evaluation 12

Suspension of athlete evaluation 13

Observation assessment 14

Observation assessment and first appearance 15

Changes of Sport Class following first appearance 15

5 Article five - Sport Class and Sport Class Status 16

Sport Class 16

Sport Class Status 16

Fixed Review Date 18

Changes to Sport Class criteria 18

Errors regarding Sport Class Status 19

Medical Review: Application to undergo athlete evaluation 19

Provision involving Multiple Sport Classes 20

Recognition of Sport Classes for athletes with visual impairment of other sports 20

6 Article Six - Rules regarding athletes who are Not Eligible 21

7 Article Seven - Protests 22

Protests submissions 22

Resolving a Protest 23

Protests under exceptional circumstances 25

Provisions where no Protest Panel is available 25
8 Article eight – Appeals 27
9 Article nine – Intentional Misrepresentation 28
Misrepresentation during athlete evaluation 28
Misrepresentation after allocation of Confirmed Sport Class 28
Assisting Intentional Misrepresentation 28
10 Glossary of defined terms 29
Appendix one: Eligibility criteria and sport classes for athletes with physical impairment competing in alpine skiing 34
1 Introduction 34
2 Eligibility criteria 34
3 Assessment methods 35
Muscle Strength testing (Oxford Scale) 36
Spasticity Grading (Ashworth Scale) 36
Board test for trunk function 37
Upper limb assessment 40
Lower limb assessment 40
4 Sport Class Profiles 42
Standing Sport Classes LW 1 to LW 9 42
Sitting Sport Classes LW 10 to LW 12 49
Appendix two: Eligibility criteria and sport classes for athletes with visual impairment 52
1 Introduction 52
2 Eligibility criteria 52
3 Assessment methods 53
4 Sport Classes Profiles for athletes with visual impairment 54

IPC ALPINE SKIING

Purpose and organisation of these Rules

Purpose

These Classification Rules (referred to generally as "the Rules") provide a framework within which the process of "classification" may take place. The term "classification" refers to a structure for competition the aim of which is to ensure that an athlete's impairment is relevant to sport performance, and to ensure that Athletes compete equitably with each other. The purpose of classification is to minimise the impact of eligible impairment types on the outcome of competition, so that athletes who succeed in competition are those with best anthropometry, physiology and psychology and who have enhanced them to best effect.

Organisation

Articles

Article one	Article one explains that these Rules apply to persons who compete or are otherwise involved in the sport of IPC Alpine Skiing, and how the Rules should be interpreted.
Article two	Article two explains that qualified personnel referred to in these Rules as "classifiers" conduct athlete evaluation, with other key "classification personnel" being involved.
Article three	Article three explains how classifiers will conduct athlete evaluation as part of a classification panel.
Article four	Article four explains that the process of classification is carried out by way of athlete evaluation under these Rules, and details the specific processes and protocols to be followed during athlete evaluation.
Article five	Article five explains that classification is undertaken so that athletes can be designated a Sport Class (which groups athletes together in competition) and allocated a Sport Class Status (which indicates when athletes should be evaluated and how their Sport Class may be challenged).
Article six	Article six explains that one outcome of athlete evaluation may be that an athlete is found not to be eligible to compete in the sport of IPC Alpine Skiing, and the implications that arise if this is the case.
Article seven	Article seven explains that an Athlete or other party may dispute the

allocation of a Sport Class, and the process by which these disputes should be resolved.

Article eight — Article eight explains that the procedure by which a Sport Class is allocated is subject to a limited form of challenge, and how these challenges should be made.

Article nine — Article nine explains that if an athlete or other party attempts to subvert the athlete evaluation process, there will be consequences.

Glossary — The glossary to these Rules contains a list of the defined terms used in these Rules.

Appendices

Appendix one — Appendix one deals with Sport Classes for Athletes with physical impairment, and sets out the minimum disability criteria and assessment methodologies that apply in order for an athlete with physical impairment to be eligible to compete in alpine skiing events.

Appendix two — Appendix two deals with Sport Classes for athletes with visual impairment, and sets out the minimum disability criteria and assessment methodologies that apply in order for an athlete with visual impairment to be eligible to compete in the sport of IPC Alpine Skiing.

1 Article one - Scope and application

1.1 These Rules are an integral part of the IPC Alpine Skiing Rules and Regulations and are intended to implement the provisions of the IPC Classification Code for the sport of IPC Alpine Skiing.

1.2 These Rules shall apply to -

1.2.1 All athletes and athlete support personnel who are registered and/ or licensed with IPC Alpine Skiing and Snowboard as defined in the IPC Alpine Skiing Rules and Regulations;

1.2.2 All athletes and athlete support personnel participating in such capacity in events and competitions recognised by IPC Alpine Skiing and Snowboard or any of its members or affiliate organisations or licensees;

1.3 It is the personal responsibility of athletes, athlete support personnel and classification personnel to acquaint themselves with all of the requirements of these Rules, the IPC Classification Code (see IPC Handbook, Section 2, Chapter 1.3) and the other sections of the IPC Handbook that apply to classification, including the IPC Position Statement on Background and Scientific Rationale for Classification in Paralympic Sport (see IPC Handbook, Section 2, Chapter 4.4)

International classification

1.4 Athlete evaluation that is conducted in full compliance with these Rules is referred to as international classification. IPC Alpine Skiing and Snowboard will only recognize Sport Class and Sport Class Status if allocated by way of international classification.

1.5 IPC Alpine Skiing and Snowboard will provide athletes with an opportunity to undertake international classification by appointing classifiers certified pursuant to article two to conduct athlete evaluation at recognized competitions, and by providing reasonable notice of such international classification opportunities to athletes and national bodies.

1.6 An athlete will only be permitted to undergo international classification if he or she

1.6.1 is registered and/ or licensed with IPC Alpine Skiing and Snowboard pursuant to the relevant provisions in the IPC Alpine Skiing Rules and Regulations, and

1.6.2 has been entered in a recognised competition where international classification is to take place.

Interpretation, commencement and amendment

1.7 These Rules shall be interpreted and applied at all times in a manner that is consistent with the IPC Classification Code.

1.8 These Rules shall come into full force and effect on the effective date as specified by IPC Alpine Skiing and Snowboard.

1.9 Amendments to these Rules shall be approved and shall come into effect in the manner prescribed by IPC Alpine Skiing and Snowboard. IPC Alpine Skiing and Snowboard may at any time amend, update or otherwise alter the text, meaning and effect of the appendices independently of these Rules.

2 Article two – Classification personnel

2.1 Classification personnel are fundamental to the effective implementation of these Rules. This article two explains how IPC Alpine Skiing and Snowboard classification personnel assist in the delivery of classification under these Rules.

Classification Personnel

2.2 IPC Alpine Skiing and Snowboard should appoint the following classification personnel, each of whom will have a key role in the administration, organisation and execution of classification for IPC Alpine Skiing:

2.3 Head of Classification

2.3.1 The Head of Classification for IPC Alpine Skiing and Snowboard will be appointed by IPC Alpine Skiing to be responsible for the direction, administration, coordination and implementation of all classification matters for IPC Alpine Skiing.

2.3.2 IPC Alpine Skiing and Snowboard may delegate the role of Head of Classification to a nominated person or group of persons, such persons being identified publicly as such by IPC Alpine Skiing.

2.3.3 The Head of Classification in conjunction with IPC Alpine Skiing and Snowboard management is responsible for appointing classification panel(s) that will conduct international classification at recognised competitions.

Classifiers

2.3.4 A classifier is a person authorised and certified by IPC Alpine Skiing and Snowboard as being competent to conduct athlete evaluation. IPC Alpine Skiing and Snowboard will specify from time to time the means by which it shall certify classifiers.

2.3.5 IPC Alpine Skiing classifiers are required, as appropriate, to assist in the research, development and clarification of the Classification Rules and Sport Class profiles for IPC Alpine Skiing; participate in classifier workshops arranged by IPC Alpine Skiing and/or the IPC from time to time; and attend such classifier training as requested from time to time by the IPC Alpine Skiing and Snowboard.

2.3.6 The Head of Classification may be appointed as classifier and/ or Chief Classifier.

2.4 Chief Classifiers

2.4.1 A Chief Classifier is a classifier who is appointed by IPC Alpine Skiing and Snowboard to act as the senior classifier present at a specific IPC Alpine Skiing recognised competition.

2.4.2 A Chief Classifier is responsible for the direction, administration, co-ordination and implementation of classification matters at a competition. In particular, a Chief Classifier may be required by IPC Alpine Skiing and Snowboard to do the following:

2.4.2.1 Identify those athletes who will be competing at that competition who will require athlete evaluation;

2.4.2.2 Supervise classifiers to ensure that the Rules are applied appropriately during a specific competition;

2.4.2.3 Manage the Protest process as required by article seven.

2.4.2.4 Liaise with the relevant competition organiser to ensure that all travel, accommodation and other logistics are arranged in order that classifiers may carry out their duties at the competition;

2.5 Trainee classifiers

2.5.1 IPC Alpine Skiing and Snowboard may appoint trainee classifiers in order that they may be certified as a classifier.

2.5.2 A trainee classifier may actively participate in or observe athlete evaluation under supervision of a classification panel in order to develop the necessary competencies and proficiencies so as to be certified by IPC Alpine Skiing and Snowboard as a classifier. They will be required to perform any such other duties as IPC Alpine Skiing and Snowboard requires.

Classifier competencies, qualifications and responsibilities

2.6 IPC Alpine Skiing and Snowboard certifies classifiers who have abilities and qualifications relevant to conduct athlete evaluation in respect of athletes with physical and/ or visual impairment.

2.7 IPC Alpine Skiing and Snowboard requires classifiers to be certified health professionals in a field relevant to the impairment category which IPC Alpine Skiing and Snowboard at its sole discretion deems acceptable, e.g. physicians and physiotherapists for athletes with physical impairment, and ophthalmologists and optometrists for athletes with visual impairment. In addition, a requisite level of anatomical, biomechanical and sport-specific expertise in the sport of (adaptive) skiing and/or snowboard must be proven.

2.8 All classification personnel must comply with the standards of behaviour mandated from time to time in the IPC Code of Ethics and the IPC Classifier Code of Conduct. If any classification personnel is found to have breached the terms of either the IPC Code of Ethics or the IPC Classifier Code of Conduct, IPC Alpine Skiing and Snowboard will have sole discretion to withdraw any applicable certification or authorisation. IPC Alpine Skiing and Snowboard may also make such recommendations as it sees fit to IPC and any other relevant bodies as regards any certification held by the relevant classification personnel to act as classification personnel in respect of other sports.

3 Article three - Classification panels

3.1 A classification panel is a body that is appointed by IPC Alpine Skiing and Snowboard to conduct athlete evaluation in accordance with these Rules. A classification panel should be comprised of a minimum of two (2) classifiers. If the circumstances so require, the Head of Classification may designate that a classification panel may consist of one suitably accredited and qualified classifier, who has been certified by IPC Alpine Skiing and Snowboard to conduct physical assessment. A classification panel consisting of one Classifier may only allocate a Sport Class designated with Sport Class Status Review (R) (see article 5.11.2 below).

3.2 IPC Alpine Skiing and Snowboard and competition organizers will whenever possible ensure that at least two classification panels are able to conduct athlete evaluation for each impairment category (physical impairment and visual impairment, assuming that events are offered for both impairment categories).

3.3 Classification personnel should have no relationship with any athlete or athlete support personnel present at a competition or otherwise that might create any actual or perceived bias or conflict of interest. Classification personnel must disclose to IPC Alpine Skiing and Snowboard any actual or perceived bias or conflict of interest that may be relevant to their appointment as a member of any classification panel.

3.4 IPC Alpine Skiing and Snowboard will wherever possible ensure that classifiers who act as members of a classification panel at a competition will not have any official responsibilities other than in connection with athlete evaluation.

3.5 A Classification panel may seek third party expertise of any nature if it considers in its sole discretion that this would assist it in completing the process of athlete evaluation.

4 Article four - Athlete evaluation

4.1 Athlete evaluation is the process by which an athlete is assessed by a classification panel in order that the athlete may be allocated a Sport Class and a Sport Class Status.

Athlete evaluation process

4.2 The athlete evaluation process may encompass the following:

4.2.1 Physical assessment: the classification panel should conduct a physical assessment of the athlete, so as to establish that the athlete has an eligible impairment that meets the relevant minimum disability criteria; and/ or

4.2.2 Technical assessment: the classification panel should conduct a technical assessment of the athlete which may include, but is not limited to, an assessment of the athlete's ability to perform, in a non-competitive environment, the specific tasks and activities that are part of the sport in which the athlete participates; and/ or

4.2.3 Observation assessment: the classification panel may conduct observation assessment, which shall involve observing an athlete performing the specific skills that are part of the sport in competition. Observation assessment may only take place if a classification panel believes that they cannot complete athlete evaluation and allocate a fair sport class without observing the athlete in competition.

4.3 The means by which physical, technical and observation assessment are to be conducted are specified in the appendices to these Rules.

Athlete evaluation requirements

4.4 The following requirements apply to athlete evaluation:

4.4.1 The Athlete and his or her national body are jointly responsible for ensuring that the athlete attends athlete evaluation.

4.4.2 Athlete evaluation and its associated processes will be conducted in English. If the athlete and/or the athlete support personnel require an interpreter, the national body will be responsible for arranging the attendance of an interpreter.

4.4.3 One person (in addition to any required interpreter) may accompany an athlete during athlete evaluation. This person should be familiar with the athlete's impairment and sporting history and must be a member of the athlete's national body or must be otherwise authorized in advance by the Chief Classifier to attend the athlete's athlete evaluation.

4.4.4 The athlete must accept the terms of the IPC Alpine Skiing and Snowboard Evaluation Consent Form prior to participating in athlete evaluation. The athlete must provide identification, such as a passport, ID card, IPC Alpine Skiing license Card or accreditation that verifies the Athlete's identity to the satisfaction of the classification panel.

4.4.5 The athlete must attend athlete evaluation with all sports equipment and attire used in competition.

4.4.6 The athlete must attend athlete evaluation with all relevant medical documentation (in English or with a certified English translation), including but not limited to medical reports, medical records and diagnostic information, which relate to the athlete's impairment (see the Medical Diagnostic Form).

4.4.7 The athlete must disclose either prior to, or at, athlete evaluation details of any medication used by the athlete.

4.4.8 The classification panel may use video footage and/or any other records (including pre-existing video footage and/or records) to assist it in carrying out athlete evaluation. In addition, the classification panel may video-record any part of athlete evaluation if it considers that such recording is necessary to enable it to complete athlete evaluation. Any such recording will be used for the purposes of athlete evaluation only and may be used for research and education purposes with the athlete's prior consent.

4.4.9 The classification outcomes will be published at the competition by the Chief Classifier or a person authorized by the Chief Classifier.

Failure to attend athlete evaluation

4.5 If an Athlete is required to attend athlete evaluation, but fails to do so, the classification panel will report the fact of the non-attendance to the Chief Classifier. The Chief Classifier may, if satisfied that a reasonable explanation exists for the failure to attend athlete evaluation, specify a revised time and date for athlete evaluation at the relevant competition.

4.6 If the athlete fails to attend athlete evaluation on this second occasion, or is, in view of the Chief Classifier, unable to provide a reasonable explanation of his or her non-attendance, the athlete will not be permitted to compete at the relevant competition.

Suspension of athlete evaluation

4.7 A classification panel may suspend athlete evaluation in one or more of the following circumstances:

4.7.1 if the athlete fails to meet any of the requirements detailed in these Rules for attendance at athlete evaluation (see article 4.4 above);

4.7.2 if the classification panel considers that the use (or non-use) of any medication disclosed by the athlete will affect its ability to conduct athlete evaluation in a fair manner;

4.7.3 if an athlete fails to produce sufficient medical documentation and the classification panel considers that the absence of such medical documentation will affect its ability to conduct athlete evaluation in a fair manner;

4.7.4 if an athlete has a health condition (of any nature or description) that limits or prohibits the athlete from complying with requests made by the classification panel during the course of athlete evaluation, which the classification panel considers will affect its ability to conduct athlete evaluation in a fair manner (e.g. pain);

4.7.5 if an athlete refuses to comply with any reasonable instructions given to him or her by a classification panel (or a Chief Classifier or the relevant Head of Classification) during the course of athlete evaluation to an extent that classification panel considers that this means it cannot conduct athlete evaluation in a fair manner. Such behaviour shall be referred to as a case of non-cooperation. (see IPC Classification Code, article 10);

4.7.6 if an athlete's presentation of his or her abilities is inconsistent with other information made available to the classification panel to the extent that the classification panel considers that this means it cannot conduct athlete evaluation in a fair manner.

4.8 If a classification panel suspends an athlete evaluation the following steps will be taken:

4.8.1 the classification panel will explain the reason for the suspension to the athlete and the athlete's national body and detail the remedial action that is required on the part of the athlete.

4.8.2 the classification panel will report the fact of the suspension to the chief classifier. the chief classifier will specify a time and date for resumption of the athlete evaluation on the condition that the athlete takes the remedial action specified by the classification panel.

4.9 If the athlete attends athlete evaluation having taken the remedial action to the classification panel's satisfaction, the classification panel will attempt to complete the athlete evaluation and allocate a Sport Class and Sport Class Status. This procedure will be subject to the classification panel's right to further suspend athlete evaluation according to article 4.7.

4.10 If the athlete fails to take the remedial action required to the classification panel's satisfaction and within the time specified by the Chief Classifier, the classification panel will terminate the athlete evaluation and IPC Alpine Skiing and Snowboard will designate the athlete as being "Classification Not Completed" (CNC) within the classification master list for IPC Alpine Skiing. This designation will preclude the athlete from competing at any competition until athlete evaluation is completed. IPC Alpine Skiing and Snowboard will stipulate from time to time how this designation impacts on performance recognition.

4.11 The athlete and/ or athlete support personnel may be subject to further investigation regarding Intentional Misrepresentation pursuant to article nine.

Observation assessment

4.12 If a classification panel requires an athlete to complete observation assessment following completion of physical and technical assessment in order that the athlete can be allocated a Sport Class, the provisions regarding observation assessment will apply.

4.13 Pending completion of observation assessment, the athlete will be allocated a Sport Class with a tracking code:

4.13.1 If the Athlete has entered the relevant competition with Sport Class Status New (N), the athlete will be allocated the tracking code competition New Status (CNS);

4.13.2 If the athlete has entered the relevant competition with Sport Class Status Review (R), the athlete will be allocated the tracking code Competition Review Status (CRS);

4.14 An athlete will retain the Sport Class and tracking code until observation assessment is satisfactorily completed.

Observation assessment and first appearance

4.15 Observation assessment, if required by the classification panel for the respective athlete, is conducted during the athlete's first appearance.

4.16 First appearance is the first time that an athlete competes in an event during a competition. First appearance in one event within a Sport Class shall apply to all other events within the same Sport Class, except if otherwise stipulated in the appendices to these Rules.

4.17 After satisfactorily completing observation assessment, the classification panel will allocate the athlete a Sport Class and designate the athlete with a Sport Class Status. The tracking code will then be removed.

Changes of Sport Class following first appearance

4.18 If an Athlete makes his or her first appearance with a Sport Class and tracking code, the athlete may be allocated a different Sport Class after the observation assessment is completed.

4.19 The impact of an athlete changing Sport Class after first appearance on medals, records and results is detailed in the Model of Best Practice on Sport Class Changes following First Appearance (IPC Handbook, Section 2, Chapter 1.3) and/or the IPC Alpine Skiing Rules and Regulations.

5 Article five - Sport Class and Sport Class Status

5.1 A Sport Class is a sporting competition category that is allocated to an athlete following athlete evaluation. It is allocated based on the existence of an eligible impairment and compliance with the minimum disability criteria, and the degree to which impairment impacts upon sport performance.

Sport Class

5.2 A Sport Class will be allocated to an athlete by a classification panel following athlete evaluation. A Sport Class cannot be allocated to an athlete in any other circumstances.

5.3 The decision of the classification panel to allocate a Sport Class is final and subject to challenge only as prescribed in article seven and article eight of these Rules.

5.4 A Sport Class that enables an athlete to compete in the sport of IPC Alpine Skiing will be allocated if that athlete has an eligible impairment that complies with the minimum disability criteria set by IPC Alpine Skiing and Snowboard. The requirements regarding eligible impairment and minimum disability criteria are detailed in the appendices to these Rules.

5.5 If an athlete does not have an eligible impairment or has an eligible impairment that does not comply with the minimal disability Criteria, he or she will not be eligible to compete within the sport of IPC Alpine Skiing. If an Athlete is not eligible to compete he or she will be allocated Sport Class "Not Eligible" (see article six).

5.6 The Sport Class allocated to the athlete will be in accordance with the Sport Class designations as explained in the appendices to these Rules.

Sport Class Status

5.7 An athlete's Sport Class Status indicates whether or not an athlete will be required to undertake athlete evaluation again in the future, and whether (and by what party) the athlete's Sport Class may be subject to challenge by way of Protest as prescribed in article seven of these Rules.

5.8 The Sport Class Status designated to an athlete will be one of the following:

- Sport Class New (N)
- Sport Class Review (R)
- Sport Class Confirmed (C)

5.9 Athletes with Sport Class Status New (N)

5.9.1 An athlete will be designated with Sport Class Status New (N) if a national body has allocated an Entry Sport Class to him or her, and the athlete has not completed international classification yet.

5.10 Athletes with Sport Class Status Review (R)

5.10.1 A classification panel will designate an athlete with Sport Class Status Review (R) if he or she has completed athlete evaluation and been allocated a Sport Class, but the classification panel believes that further athlete evaluation will be required before the athlete can be designated as Sport Class Confirmed (C). This may be, for a range of reasons, for example, because the athlete has a fluctuating and/or progressive impairment(s), or, given his or her age, has Impairment(s) that may not have stabilized.

5.10.2 Any Athlete who has been allocated Sport Class Not Eligible (NE) will be designated with Sport Class Review (R) if that athlete is entitled to a further athlete evaluation under these Rules (see article six).

5.10.3 An athlete who has been designated with Sport Class Status Review (R) must complete athlete evaluation prior to competing at a recognised competition where classification is offered, save where the provisions in these Rules relating to the Fixed Review Date apply (see Articles 5.12-15).

5.10.4 The Sport Class of any athlete with Sport Class Status Review (R) may be subject to Protest by a national body as prescribed in article seven of these Rules.

5.11 Athletes with Sport Class Status Confirmed (C)

5.11.1 A classification panel will designate an athlete with Sport Class Confirmed (C) if he or she has completed athlete evaluation and has been allocated a Sport Class, and the classification panel is satisfied that the athlete's impairment and/or activity limitations are sufficiently stable so that the athlete can be allocated Sport Class Status Confirmed.

5.11.2 Sport Class Status Confirmed may not be allocated if the classification panel consists of one classifier only.

5.11.3 Any athlete who has been allocated Sport Class Not Eligible (NE) will be designated with Sport Class Confirmed (C) if that Athlete is not entitled to a further athlete evaluation under these Rules (see article six).

5.11.4 An athlete who has been designated with Sport Class Status Confirmed (C) is not required to undergo athlete evaluation prior to competing at any competition.

5.11.5 The Sport Class of any athlete who enters a competition with Sport Class Status Confirmed (C) may be subject to Protest pursuant to the provisions in articles 7.24-7.26 of these Rules relating to Protests under exceptional circumstances.

Fixed Review Date

5.12 A classification panel that allocates Sport Class Status Review may also, if it considers it appropriate to do so, nominate a "Fixed Review Date".

5.13 If a Fixed Review Date is set in this manner, then

5.13.1 the athlete will not be required to attend athlete evaluation at any competition prior to the Fixed Review Date; and

5.13.2 The athlete will retain the Sport Class assigned to that athlete and be permitted to compete with that Sport Class.

5.14 The athlete may, at his or her own request, attend athlete evaluation before the Fixed Review Date pursuant to the Medical Review Process described in these Rules (see articles 5.19-5.24).

5.15 The Fixed Review Date will be the first day of the competition season, which is 1 July for IPC Alpine Skiing, or an alternative date set by the Classification Panel.

Changes to Sport Class criteria

5.16 If IPC Alpine Skiing and Snowboard changes any Sport Class criteria and/ or assessment methods defined in the appendices to these Rules, then –

5.16.1 IPC Alpine Skiing and Snowboard may re-assign any athlete with Sport Class Status Confirmed with Sport Class Status Review in order for the athlete to undergo athlete evaluation; or

5.16.2 IPC Alpine Skiing and Snowboard may remove the Fixed Review Date for any athlete in order for the athlete to undergo athlete evaluation at the earliest available opportunity; and

5.17 In both instances the relevant national body shall be informed as soon as is practicable.

Errors regarding Sport Class Status

5.18 If the Head of Classification believes on reasonable grounds that an Athlete has been designated with a Sport Class Status in manifest error and/or clear breach of these Rules, he or she shall

5.18.1 advise the athlete and the relevant national body or bodies as to the error or breach that has taken place with a brief statement of the reasons for that belief; and

5.18.2 immediately amend the athlete's Sport Class Status, and advise the athlete and the relevant national body or bodies. IPC Alpine Skiing and Snowboard will make the appropriate amendment to the classification master list.

Medical Review: Application to undergo athlete evaluation

5.19 An athlete who has reason to believe that his or her impairment and activity limitations are no longer consistent with the profile for his or her Sport Class should have his or her Sport Class reviewed. The means by which this can take place is referred to in these Rules as "the Medical Review Process" and the means by which a request for such review is referred to as "a Medical Review Request".

5.20 A national body must make a Medical Review Request. A Medical Review Request cannot be made by an athlete.

5.21 A Medical Review Request may be made if an athlete has been allocated:

5.21.1 A Sport Class with Sport Class Status Confirmed (C), or

5.21.2 A Sport Class with Sport Class Status Review (R), if the athlete has been allocated a Fixed Review Date

5.22 A Medical Review Request must be made by completing the IPC Medical Review Request Form and by following its instructions. The Athlete and his or her NPC must ensure that the Medical Review Request abides by the following provisions:

5.22.1 it must explain that the athlete's relevant Impairment has changed since the last athlete evaluation to an extent that the athlete's Sport Class might not be accurate anymore;

5.22.2 it must be completed by an appropriately qualified health professional and include all relevant supporting documentation in English or with a certified English translation;

5.22.3 a non-refundable fee must be paid.

5.23 Each Medical Review Request will be assessed by IPC Alpine Skiing and Snowboard to ensure that all requisite information, documentation and fee have been provided. Once the Medical Review Request is complete, the Head of Classification will, in conjunction with such third parties as he or she considers appropriate, decide whether or not the Medical Review Request should be upheld.

5.24 If the Medical Review Request is upheld the Athlete's Sport Class Status will be amended from Confirmed to Review; or the athlete's Fixed Review Date will be set aside; and the athlete will be requested to undertake athlete evaluation at the next available opportunity.

Provision involving Multiple Sport Classes

5.25 IPC's general principle is that an athlete is allocated one Sport Class only, which is either based on a physical, visual or intellectual impairment.

5.26 The Model of Best Practice on Choice of Sport Class for Athletes with Multiple Impairments (IPC Handbook, Section 2, Chapter 1.3) should be considered by any athlete who believes that he or she is eligible for more than one Sport Class.

Recognition of Sport Classes for athletes with visual impairment of other sports

5.27 If brought to the attention of IPC Alpine Skiing and Snowboard that an athlete with visual impairment and Sport Class Status Review with Fixed Review Date or Confirmed with IPC Alpine Skiing and Snowboard holds a different and more recently allocated Sport Class with another IF or Sport, then IPC Alpine Skiing and Snowboard will adopt the Sport Class that indicates the most visual ability, and amend the Sport Class Status to Review. If the Sport Class by the other IF or Sport allocated is Not Eligible, the athlete's Sport Class of IPC Alpine Skiing will not be changed, but the Sport Class Status will be changed to Review.

6 Article Six - Rules regarding athletes who are Not Eligible

6.1 An athlete must have an eligible impairment, and that eligible impairment must comply with the minimal disability criteria set by IPC Alpine Skiing and Snowboard in order to be eligible to compete. If a classification panel determines that an athlete does not have such eligible impairment, and/or that eligible impairment does not comply with the minimal disability criteria, that athlete will not be eligible to compete.

6.2 If a classification panel determines that an athlete is not eligible to compete the athlete will be allocated Sport Class Not Eligible (NE).

6.3 If a classification panel allocates an athlete Sport Class Not Eligible (NE) the athlete will be entitled to undergo a second athlete evaluation by a second separate classification panel either at that competition or as soon as practicable thereafter. Pending this second assessment the athlete will be allocated Sport Class Not Eligible (NE) and designated with Sport Class Status Review (R). The athlete will not be permitted to compete before such re-assessment.

6.4 If there is no opportunity for a separate athlete evaluation to be undertaken at that competition, IPC Alpine Skiing and Snowboard will take all reasonable steps to ensure the second athlete evaluation is undertaken at the earliest opportunity.

6.5 If a second classification panel confirms that the athlete is not eligible the athlete will not be permitted to compete at that competition or any future competitions. The athlete will be allocated Sport Class Not Eligible (NE) with Sport Class Status Confirmed and there is no further right to Protest unless made under exceptional circumstances pursuant to articles 7.24-7.26.

6.6 A national body may request that an athlete with Sport Class Not Eligible (NE) with Sport Class Status Confirmed (C) undertakes athlete evaluation, but only by way of a Medical Review Request as defined in these Rules.

6.7 While an athlete with Sport Class NE will be not eligible to compete within the sport of IPC Alpine Skiing, it will not affect his or her ability to compete in other para-sports, subject to their rules on classification.

6.8 If an athlete is allocated Sport Class Not Eligible, this does not question the presence of a genuine impairment. It is only a ruling on the eligibility of the athlete to compete in the sport of IPC Alpine Skiing.

7 Article Seven - Protests

7.1 The term “Protest” is used in these Rules refers to the procedure by which a formal objection to the allocation of a Sport Class is made and subsequently resolved.

7.2 A national body may make a Protest in respect of a Sport Class of any athlete who entered the relevant competition where classification is offered with either Sport Class Status New (N) or Sport Class Status Review (R).

7.3 The decision that is the subject of the Protest is referred to in this part of the Rules as “the Protested Decision”, and the Athlete in respect of whose Sport Class the Protest is made is referred to as “the Protested Athlete”.

7.4 No national body may make a Protest in respect of any Athlete who entered the relevant competition with Sport Class Status Confirmed (C).

7.5 The Chief Classifier for the relevant competition may make a Protest in respect of any athlete regardless of their Sport Class Status pursuant to the provisions contained in these Rules regarding Protests under exceptional circumstances (see articles 7.24-7.26).

7.6 An athlete's Sport Class may only be protested once in any individual competition, unless an additional Protest is made pursuant to the provisions concerning Protests made in exceptional circumstances.

7.7 The national body making a Protest is responsible for ensuring that all Protest process requirements are observed.

Protests submissions

7.8 A Protest may only be submitted by a national body, an Athlete cannot submit a Protest.

7.9 The Chief Classifier, or a person designated by IPC Alpine Skiing and Snowboard for the relevant Competition, will be the person authorised to receive Protests on behalf of IPC Alpine Skiing and Snowboard.

7.10 If a classification decision is published during the classification evaluation period, the national body must make a Protest within one (1) hour of the classification decision being published. If a Protest is made during competition following completion of an athlete’s observation in competition, the Protest must be submitted within fifteen (15) minutes of the Protested Decision being published.

7.11 Protests must be made by way of a designated Protest Form that will be made available by IPC Alpine Skiing and Snowboard at the relevant competition. The Protest Form will prescribe certain information and documentation that must be submitted with the Protest form. This will include the following:

7.11.1 Name, nation and sport of the athlete whose Sport Class is being protested;

7.11.2 The details of the Protested Decision;

7.11.3 An explanation as to why the Protest has been made and the basis on which the national body believes that the Protested Decision is flawed;

7.11.4 All documents and other evidence referred to in the Protest;

7.11.5 The signature of the authorised national body; and

7.11.6 A Protest fee 100 EUR.

7.12 Upon receipt of the Protest Form the Chief Classifier will conduct a review of the Protest submission. If it appears to the Chief Classifier that the Protest is not made bona fide or is based on mere assertion without credible supporting evidence and/ or the Protest submission is otherwise not in compliance with these Rules, the Chief Classifier shall decline the protest and notify all relevant parties. In such cases the Chief Classifier shall provide a written explanation to the national body as soon as is practicable. The Protest fee will be retained by IPC Alpine Skiing and Snowboard.

7.13 If the Chief Classifier declines a Protest, the National Body may resubmit the Protest if it is able to remedy the deficiencies identified by the Chief Classifier in respect of the Protest. The time frames for submitting a Protest shall remain the same in such circumstances. If a national body resubmits a Protest, all protest procedure requirements will apply. A second Protest fee must be paid.

Resolving a Protest

7.14 If the Protest is accepted, the Chief Classifier shall appoint a classification panel to conduct athlete evaluation in respect of the athlete. This classification panel is referred to as a “Protest Panel”.

7.15 A Protest Panel should comprise, at a minimum, the same number of classifiers as those comprised in the classification panel that made the Protested Decision. Only if practicable given all the circumstances of the competition, the Protest Panel should comprise classifiers of equal or greater level of experience and/or certification as who comprised the classification panel that made the Protested Decision.

7.16 The Protest Panel must not include any person who was a member of the classification panel that made the Protest Decision. Further, it should not include any person who has been a member of any classification panel that has conducted any athlete evaluation in respect of the Protested Athlete within a period of eighteen (18) months prior to the date of the Protest Decision.

7.17 IPC Alpine Skiing and Snowboard will supply all documentation submitted with the Protest Form to the Protest Panel. The Chief Classifier will notify all relevant parties of the time and date for the athlete evaluation that will be conducted by the Protest Panel.

7.18 The Protest Panel will conduct athlete evaluation in respect of the Protested Athlete according to the provisions concerning athlete evaluation in these Rules.

7.19 The Protest Panel may make enquires of the classification panel that made the Protested Decision and the Chief Classifier, if such enquiries will enable the Protest Panel to complete athlete evaluation in a fair and transparent manner. In addition, it may seek medical, sport, technical or scientific expertise in its conduct of athlete evaluation.

7.20 The Protest Panel will conclude athlete evaluation and, if appropriate, allocate a Sport Class. All relevant parties shall be notified of the Protest Panel's decision as quickly as possible following athlete evaluation.

7.21 If the Protest is upheld and the Sport Class of the athlete is changed by the Protest Panel, the Protest Fee will be refunded to the national body. If the Protest is not upheld and if the Sport Class of the Athlete is not changed by the Protest Panel, the Protest fee will be retained by IPC Alpine Skiing and Snowboard.

7.22 The decision of the Protest Panel is final and is not subject to any further Protest. According to Article 6.3, the athlete is given the opportunity to a re-assessment if the Sport Class allocated by the Protest Panel is Not Eligible.

7.23 The consequences of an athlete changing Sport Class after the resolution of a Protest during competition on medals, records and results are detailed in the Model of Best Practice on Sport Class Changes following First Appearance (IPC Handbook, Section 2, Chapter 1.3).

Protests under exceptional circumstances

7.24 A Protest in exceptional circumstances may be made in respect of an athlete if the Chief Classifier believes that because of exceptional circumstances, the athlete should undertake athlete evaluation in order that his or her Sport Class may be reviewed.

7.25 Examples of exceptional circumstances that may arise that may warrant an athlete participating in athlete evaluation include, but are not limited to:

7.25.1 An obvious and permanent change in the degree of Impairment of an athlete;

7.25.2 An athlete demonstrating significantly less or greater ability prior to or during competition which does not reflect the athlete's current Sport Class;

7.25.3 An error made by a classification panel which has led to the athlete being allocated a Sport Class which is not in keeping with the athlete's ability; or

7.25.4 Sport Class allocation criteria having changed since the athlete's most recent evaluation.

7.26 The procedure for the making of a Protest in exceptional circumstances shall be as follows:

7.26.1 The Chief Classifier shall advise the athlete and relevant national body that a Protest is being made in exceptional circumstances;

7.26.2 The Chief Classifier will provide a written summary of the reasons for the making of the Protest, which at a minimum shall explain why the Chief Classifier believes that the Athlete's Sport Class appears to be inconsistent with the athlete's perceived impairment(s) and/or activity limitation(s) and/ or with these Rules;

7.26.3 The athlete's Sport Class Status will be amended to Review (R) with immediate effect;

7.26.4 The process for making such a Protest shall be the same as that stated in these Rules in respect of Protests made by national bodies save that the Chief Classifier is not required to pay a Protest fee.

Provisions where no Protest Panel is available

7.27 If a Protest is made and accepted at a competition, but there is no opportunity for the Protest to be resolved at that competition (because, for example, it is not possible to form an appropriately constituted Protest Panel), the following provisions will apply:

7.27.1 If the athlete has been allocated Sport Class Status Confirmed (C), that will be amended to Sport Class Status Review (R);

7.27.2 The athlete will be permitted (or required) to compete in his or her current Sport Class, pending the resolution of the Protest;

7.27.3 IPC Alpine Skiing and Snowboard will take all reasonable steps to ensure that the Protest is resolved at the earliest opportunity, for example, at the next competition that the Athlete intends competing at and where international classification is offered.

8 Article eight – Appeals

8.1 An Appeal is a formal objection to the manner in which classification procedures have been conducted is submitted and subsequently resolved.

8.2 If an athlete believes that an unfair decision has been made pursuant to these Rules, he or she may apply to have that decision set aside following the Appeal procedure.

8.3 A decision will be considered unfair, if it has been made in contravention of the procedures set out in these Rules at article 3, 4, 5, 6, 7 and 8 of these Rules; and there is some manifest unfairness associated with the decision such that it should be set aside.

8.4 IPC Alpine Skiing and Snowboard has designated the International Paralympic Committee Board of Appeal on Classification (BAC) to act as the hearing body for all Appeals and all athletes submitting to athlete evaluation irrevocably submit to the exclusive, final and binding jurisdiction of the BAC.

8.5 The detailed rules of procedure in respect of Appeals are provided by the IPC in the form of the IPC BAC Bylaws (see IPC Handbook, Section 1, Chapter 2.8). These Rules incorporate the IPC BAC Bylaws, and any Appeal made under these Rules must be made pursuant to the IPC BAC Bylaws.

8.6 The outcome of an Appeal will be that either the relevant decision is upheld, or is set aside. An Appeal decision cannot amend a Sport Class or Sport Class Status.

9 Article nine – Intentional Misrepresentation

9.1 Intentional Misrepresentation is a violation of these Rules, and will be investigated and potentially sanctioned as provided for in the IPC Intentional Misrepresentation Rules (IPC Handbook, Section 2, Chapter 1.3).

Misrepresentation during athlete evaluation

9.2 An athlete who intentionally misrepresents his or her skills and/or abilities and/or the degree or nature of physical or visual impairment to a classification panel in the course of athlete evaluation with the intention of deceiving or misleading that classification panel shall be guilty of Intentional Misrepresentation.

Misrepresentation after allocation of Confirmed Sport Class

9.3 If following the allocation of a Sport Class an athlete undertakes any form of corrective treatment (a "medical intervention"), and the athlete (or any other participant) knows (or should know) that the medical intervention was intended to result in improved sport performance, the athlete must provide details of that medical intervention to the IPC at the earliest reasonable opportunity. If the athlete's Sport Class is later changed because the athlete's sporting performance has improved as a result of (in whole or in part) that medical intervention, but the athlete failed to disclose that medical intervention to IPC, the athlete will be charged with Intentional Misrepresentation.

Assisting Intentional Misrepresentation

9.4 Any athlete or athlete support personnel who knowingly assists, covers up or is any other way involved in any other type of complicity involving Intentional Misrepresentation shall themselves be guilty of Intentional Misrepresentation.

10 Glossary of defined terms

Term	Definition
Activity limitation	Difficulties an individual may have in executing activities.
Appeal	A formal objection to the manner in which classification procedures have been conducted is submitted and subsequently resolved.
Athlete	Any person who participates in the sport of IPC Alpine Skiing at either international level (as defined by IPC Alpine Skiing and Snowboard) or national level (as defined by a national body) and any other additional person who participates in sport at a lower level if designated by the person's national body.
Athlete evaluation	The process by which an athlete is assessed in accordance with these Rules.
Athlete support personnel	Any coach, trainer, manager, interpreter, agent, team staff, official, medical or paramedical personnel working with or treating athletes participating in or preparing for training and/or competition.
Classification	A structure for competition to ensure that an athlete's impairment is relevant to sport performance, and to ensure that the athlete competes equitably with other Athletes.
Classification evaluation period	The timeframe prior to the commencement of events at a competition within which physical and technical assessment typically takes place.
Classification master list	The list, made available by IPC Alpine Skiing and Snowboard that identifies the athletes that participated in international classification.
Classification panel	A group of classifiers appointed by IPC Alpine Skiing and Snowboard to determine Sport Class and Sport Class Status in accordance with these Rules.
Classification personnel	All persons involved in or associated with the process of athlete evaluation, including the Head of Classification, Classifiers, Chief Classifiers and Trainee Classifiers.

Classifier	A person authorized by IPC Alpine Skiing and Snowboard to evaluate athletes as a member of a classification panel.
Competition	A series of individual events conducted together under the jurisdiction of IPC Alpine Skiing and Snowboard.
Competition season	The timeframe within which competitions are held for a particular sport. For summer sports, the competition season runs from January 1 of a calendar year until December 31 of the same calendar year. For winter sports, the competition season runs from July 1 of a calendar year until June 30 of the next calendar year.
Conflict of Interest	A conflict of interest will arise where a pre-existing personal or professional relationship gives rise to the possibility of that relationship affecting the classifier's ability to make an objective decision or assessment.
Effective date	The date upon which these Rules come into force.
Eligible impairment	An eligible impairment is an impairment the existence of which is a pre-requisite for an athlete to meet the minimum disability criteria for the sport of IPC Alpine Skiing.
Entry Sport Class	A Sport Class allocated to an athlete by a national body prior to an IPC Alpine Skiing competition to indicate the Sport Class with which the athlete intends to compete. An Entry Sport Class is an estimate and has no binding effect upon either the athlete or the body responsible for organising and managing the relevant competition.
Event	A sub-set of a competition that requires specific technical and sporting skills.
Fixed Review Date	A date prior to which an athlete who has been designated with Sport Class Status Review (R) will not be required to undertake athlete evaluation, regardless of whether or not that athlete competes at any competition. Unless otherwise specified by the classification panel, the Fixed Review Date is the first day of the competition season of IPC Alpine Skiing, *i.e.* 1 January for summer sports and 1 July for winter sports.
Head of Classification	A classifier responsible for all direction, administration, co-ordination and implementation of classification matters for IPC Alpine Skiing and Snowboard.

Impairment	Problems in body function or structure such as a significant deviation or loss.
Intellectual impairment	A type of impairment, which is defined as a limitation in intellectual functioning and adaptive behaviour as expressed in conceptual, social and practical adaptive skills. This impairment originates before the age of 18.
International classification	Athlete evaluation that is conducted in full compliance with these Rules.
IPC	International Paralympic Committee
IPC Classification Code	The IPC Classification Code 2007 and accompanying International Standards and any subsequent version or versions of the same.
IPC Classifier Code of Conduct	A set of rules to outline the responsibilities, to guide behaviour and decisions and to identify best practice for an individual classifier, which is part of the IPC Classification Code International Standard of Classifier Training.
IPC Code of Ethics	The ethical standard that will be applied consistently within the Paralympic Movement, and will be applicable to all IPC sanctioned events, competitions and activities.
IPC Handbook	The IPC Handbook is the primary governance instrument for the IPC in its capacity as both an International Federation and the ruling body for the Summer and Winter Paralympic Games. All persons who are subject to the jurisdiction of the IPC are required to abide by its provisions.
Medical intervention	Any intervention such as surgery, pharmacological intervention or other treatment, which affects the athlete's eligible impairment
Medical Review	The process by which an Athlete can apply to IPC Alpine Skiing and Snowboard to undergo athlete evaluation, in order that the athlete's Sport Class may be reviewed to ensure that the athlete's Sport Class remains a fair allocation.
Minimum disability criteria	The standards set by IPC Alpine Skiing and Snowboard in relation to the degree of eligible impairment that must be present in order that an athlete is deemed to be eligible to compete in the sport of IPC Alpine Skiing.

National body	A team entity of which an athlete is a member. Such an entity may be National Federation, National Paralympic Committee or other representative team body.
Not Eligible	Consequence of not meeting the eligibility criteria.
Observation assessment	The means by which a classification panel may complete athlete evaluation, if it considers that the only fair way in which it can complete athlete evaluation is to observe the athlete performing the specific skills associated with the sport of IPC Alpine Skiing either prior to or during an event.
Physical assessment	The means by which a classification panel will determine whether or not an athlete has an eligible impairment and whether that eligible impairment complies with the minimum disability criteria.
Physical impairment	A group of eligible impairments affecting an athlete's biomechanical execution of sporting activities, comprising ataxia, athetosis, hypertonia, impaired muscle power, impaired range of movement, limb deficiency, leg length difference and short stature.
Protest	The procedure by which a formal objection to an athlete's Sport Class is submitted and subsequently resolved.
Protest panel	A classification panel formed to conduct athlete evaluation in respect of an athlete's Sport Class, where that Sport Class is the subject of a Protest.
Recognised competition	An umbrella term for IPC Alpine Skiing Competitions, IPC Alpine Skiing Sanctioned Competitions and IPC Alpine Skiing Approved Competitions as defined in the IPC Alpine Skiing Rules and Regulations.
Sport class	A category defined by IPC Alpine Skiing and Snowboard in which athletes are categorized by reference to an activity limitation resulting from impairment.
Sport class status	A category allocation to each athlete to indicate evaluation requirements and Protest opportunities.
Technical assessment	The assessment of an athlete's ability to perform the tasks and activities required to participate in the sport of IPC Alpine Skiing.
Tracking code	A temporary designation applied to a Sport Class that indicates that a Sport Class is subject to final determination after observation assessment has taken place.

Visual impairment	An impairment of the eye structure, optical nerves or optical pathways, or visual cortex of the central brain, which adversely affect an athlete's vision.

Appendix one: Eligibility criteria and sport classes for athletes with physical impairment competing in alpine skiing

1 Introduction

1.1 This appendix defines the eligible types of impairment, the minimum disability criteria, methods of assessment and sport profiles designated by IPC Alpine Skiing and Snowboard for athletes with physical impairment competing in IPC Alpine Skiing.

2 Eligibility criteria

2.1 In order to compete in IPC Alpine Skiing, athletes with physical impairment must be affected by at least one of the following impairments:

- Limb deficiency: total or partial absence of the bones or joints of the shoulder region, upper extremities, pelvic region or lower extremities (s720-750)
- Impaired passive range of Motion: limitations in joint mobility (b7100-7102)
- Impaired muscle power (b730)
- Leg length difference: aberrant dimensions of bones of right lower limb or left lower limb (s75000-75020)
- Hypertonia: high muscle tone (b735)
- Ataxia: absence of control of voluntary movement (b760)
- Athetosis: involuntary contractions of muscles (b7650)

2.2 The following impairment types are non-eligible impairments in IPC Alpine Skiing:

- Mental functions (v140-189), including impairments of psychomotor control (b1470), quality of psychomotor functions (b1471), visuospatial perception (b1565), higher-level cognitive functions required for organization and planning movement (b1641); mental functions required for sequencing and coordinating complex, purposeful movements (b176)
- Hearing functions (b230-249)
- Pain (b280-0289)
- Joint instability (b715), including unstable shoulder joint and joint dislocation
- Muscle endurance functions (b740)
- Motor reflex functions (b750)
- Involuntary movement reaction functions (b755)
- Tics and mannerism (b7652)
- Stereotypies and motor perseveration (b7653)
- Cardiovascular functions (b410-429)

- Respiratory functions (b440-449)
- Functions related to metabolism and the endocrine system (b540-b559)
- Short stature (s730.343, s750.343, s760.349)

The codes refer to the WHO manual on International Classification of Functioning Disability and Health.

2.3 An athlete who is affected by an eligible impairment in combination with any of the non-eligible impairments listed under 1.2 of this appendix, will be assessed against the extent of activity limitation resulting from the eligible impairment only.

2.4 If an athlete has an activity limitation resulting from an impairment that is not permanent the athlete shall be considered ineligible to compete.

2.5 If an athlete is deemed ineligible for competition under the rules of IPC Alpine Skiing, this does not question the presence of a genuine impairment. This is only a ruling on the eligibility of the athlete to compete under the Sport Rules of IPC Alpine Skiing.

3 Assessment methods

3.1 The IPC Alpine Skiing Classification Rules and Regulations require that an athlete undertakes physical and technical assessment in order to be allocated a Sport Class. This is required in order to establish that the athlete exhibits an impairment that qualifies the athlete for competition, and that the athlete exhibits activity limitations resulting from that impairment that affect the athlete's ability to compete. Both of these components are part of the overall eligibility assessment process that is an integral feature of athlete evaluation. The physical and technical assessment detailed in this section is complemented with observation in training practical and/or competition if required by the classification panel.

3.2 In order to complete physical and technical evaluation, a classification panel must have access to medical documentation regarding the athlete's impairment. It is the responsibility of the athlete to provide sufficient evidence of the athlete physical impairment, but it is at the discretion of the Head of Classification or classification panel to request more detail if so required. Medical documentation must be submitted by means of the Medical Diagnostic Form, available from the IPC Alpine Skiing and Snowboard website.

3.3 Athletes are required to attend classification with any prosthetics, braces, strapping, and supports as well as modified ski boots.

Muscle Strength testing (Oxford Scale)

3.4 Muscle strength is to be measured with the Oxford Scale (Daniels and Worthingham 2013). The scores defining the sport class profiles make use of this scale.

0 - Complete absence of muscle contraction

1 - Faint contraction noted without any movement of the limb

2 - Contraction with very weak movement through full range of movement when gravity is eliminated

3 - Contraction moving joint through the full range of movement against gravity

4 - Contraction with full range movement against gravity plus some resistance

5 - Normal strength through full range of movement against full resistance.

Spasticity Grading (Ashworth Scale)

3.5 Spasticity is to be measured with the Ashworth Scale. The scores defining the sport class profiles make use of this score.

0 - No increase in muscle tone.

1 - Slight increase in tone giving a “catch” when affected part s moved in flexion or extension.

2 - More marked increase in tone but affected part is easily flexed.

3 - Considerable increase in tone; passive movement difficult.

4 - Affected part is rigid in flexion or extension.

3.5.1 In conducting the assessment, the classification panel must be satisfied that the resistance to passive lengthening of the muscle is related to an underlying impairment. The following signs may be useful indicators in this regard:

- presence of non-dampening clonus on the side which the tone is increased;
- abnormal brisk reflexes in the limb in which the tone is increased;
- mild atrophy in the limb in which the tone is increased;
- positive Babinski response on the side in which the tone is increased.

3.5.2 In conducting the assessment, the classification panel must be satisfied that ataxic movements are demonstrable and clearly evident and related to an

underlying impairment. Tests that may be useful for determining this include, but are not limited to:

- finger-to-nose test (athlete touching own nose from the crucifix position);
- finger-to-finger test (classifier presents his/her index finger and asks the Athlete to touch it with his/her own index finger);
- toe-to-finger test (classifier presents his/her index finger and asks the Athlete to touch it with his/her toe);
- heel shin test (drawing the heel of one leg along the length of the contralateral shin, from ankle to knee and then in reverse direction);
- tandem walk;
- gait.

3.5.3 In conducting the assessment, the classification panel must be satisfied that athetotic movements are demonstrable and clearly evident and related to an underlying impairment. Tests that may be useful for determining this include, but are not limited to:

- involuntary movement of the fingers or upper extremities despite the athlete trying to remain still;
- involuntary movement of the toes or lower extremities despite the athlete trying to remain still;
- inability to hold the body still – swaying of the body. Swaying should not be due to other neurological deficits such as vestibular or proprioceptive impairments and therefore should not be exacerbated by closing the eyes during the test;
- characteristic athetoid posturing of the limbs and/or trunk.

Board test for trunk function

3.6 To conduct the board test, the following equipment is required:

- Testing board with 3 straps (as seen in the below pictures)
- 1 kg medicine ball
- Knee flexion roll
- Foam wedges to stabilize board

3.6.1 The testing board requires the following components:

- Wooden top board and two rockers

- Slits cut on both sides
- Straps in slits to hold athlete's hips, knees and ankles firm during testing
- Velcro or snap fastenings on straps
- Top can be covered with thin compressed foam to stop athlete slipping

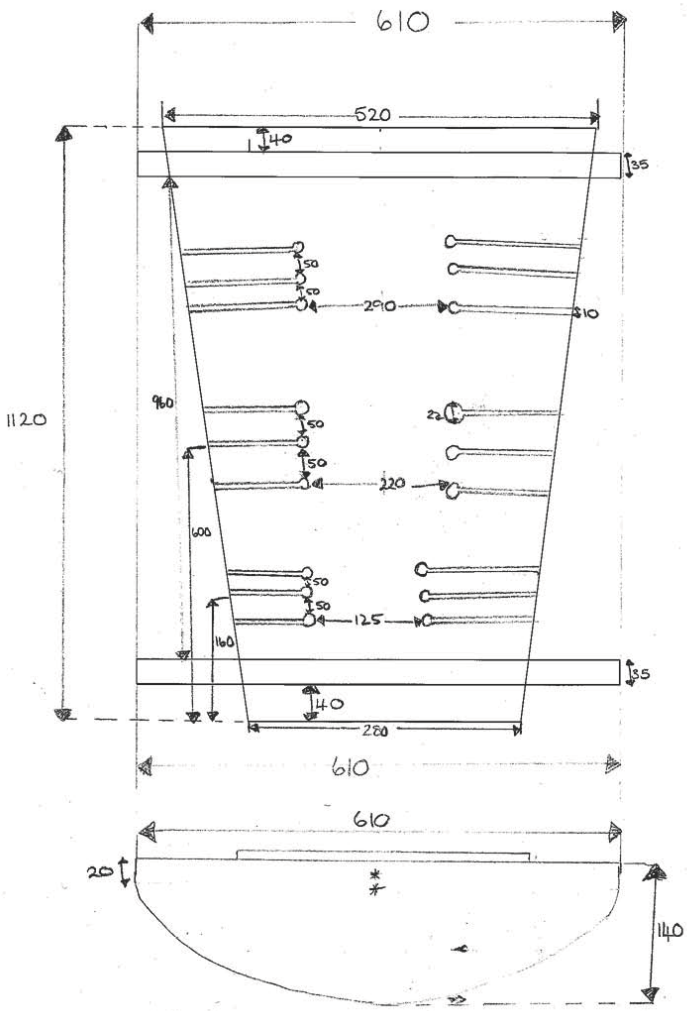

3.7 Trunk function is assessed by way of the board test, which consists of the following six tests:

3.7.1 Test 1: Upper extremity testing of strength, range of movement and function.

The test board is secured for this test.

3.7.2 Test 2: Sitting balance, in the sagittal plane.

Sitting with the hands behind the neck, flex forwards at the waist as much as possible. Then extend the trunk and lift to a position of 45° forward flexion. Hold that position, keeping the hands behind the neck. The test board is secured for this test.

3.7.3 Test 3: Sitting balance in the sagittal plane.

Arms folded over the chest, extend back to hold 45° backward extension.

3.7.4 Test 4: Sitting balance in the sagittal and frontal planes.

Free rotation of the trunk, in sitting, arms fully abducted.

3.7.5 Test 5: Sitting balance in the frontal plane.

The athlete has arms abducted and tilts the testing board from side to side, shifting the body weight sideways and maintaining the maximum tilt without losing balance.

3.7.6 Test 6: Sitting balance, in the frontal and sagittal planes to test stability of trunk and pelvis.

A 1kg ball is placed beside the athlete's hip at the level of the testing board. The athlete picks up the ball with both hands and lifts the ball above the head to place it beside the hip on the opposite side of the testing board. Repeat in the other direction.

3.8 For each test of the board test, one of the following scores are allocated:

0 = No function, test impossible

1 = Weak or poor function

2 = Fair function

3 = Normal function

3.9 The total score of all six parts of the Board Test translate into Sport Classes as follows:

LW 10 score 0 – 8

LW11 score 9 – 15

LW 12 score 16 – 18

Upper limb assessment

3.10 The following aspects should be considered when assessing the upper limbs:

- Muscle power
- Muscle tone
- Reflexes
- Passive range of movement
- Co-ordination (describe, left and right):
- Hand grasp and release
- Finger opposition
- Finger to nose
- Rapid palm up/palm down on lap
- Bilateral finger opposition in front of body

3.11 The aim of an upper limb neurological assessment is to determine if an athlete has a bilateral or unilateral impairment which would then suggest an inability to grasp a pole and/or a capacity to use the pole functionally as well as ensuring minimal impairment criteria is met. This applies also for limb loss, and limited active and/or passive ROM.

Lower limb assessment

3.12 The following aspects should be considered when assessing the lower limbs:

- Muscle power
- Muscle tone
- Reflexes
- Passive range of movement
- Co-ordination (describe, left and right):
- Heel walking
- Toe walking
- Heel- toe walking in a straight line
- Single leg stance (eyes open and eyes shut)

- Hoping on one leg, on spot/clockwise/anti-clockwise
- Running (including quick change of direction)
- Knee lifts whilst running
- Heel kick when running
- Jumping
- Rapid squats

3.13 The aim of a lower limb neurological assessment is to determine if an athlete has a bilateral or unilateral impairment, and to make an evidence based classification decision.

4 Sport Class Profiles

Final class allocation is a result of a combination of several measurements and assessments.

Standing Sport Classes LW 1 to LW 9

LW1	Minimal criteria (Bilateral lower limb impairment)
Muscle power impairment	Total score of less than 35 (normal = 80) in both legs on the Oxford Scale
Limb deficiency	Double above knee amputation, one above knee and one below knee amputation or impairments that cause a similar loss of limb
Neurological impairment	Both lower limbs affected Athetosis or ataxia must be observable with involuntary movement of both limbs Hypertonicity will be present with Babinski, Clonus and/or Brisk/Different reflexes bilaterally and spasticity = grade 3-2 bilaterally Requires a gait aid for ambulation and walking will be labored Running not possible Single leg stance less than 3 sec Poor balance Trunk sways to lead lower extremity movement Unable to hop Unable to perform advanced balance and co-ordination skills (grapevine, jump and turn, heal-shin)
Technical	Skis with 2 skis, 2 poles/outriggers, the skis may be tied together. Lower limb prosthesis or orthosis must comply with the IPC Alpine Skiing Equipment Rule Book.

LW2	Minimal criteria (Unilateral lower limb impairment)
Muscle power impairment	Total score of less than 20 (normal = 40) in one leg on the Oxford Scale
Limb deficiency	Single above or below knee amputation, at minimum unilateral through ankle amputation (Symes amputation), or impairments that cause a similar loss of limb Arthrodesis of knee and hip on the same side.
Neurological impairment	Nerve injury resulting in muscle power impairment or limb deficiency as listed above
Technical	Skis with 1 ski, 2 poles/outriggers Lower limb prosthesis or orthosis must comply with the IPC Alpine Skiing Equipment Rule Book.
LW3	**Minimal criteria (Bilateral lower limb impairment)**
Muscle power impairment	Total score of less than 60 (normal = 80) in both legs on the Oxford Scale
Limb deficiency	At minimum bilateral through ankle amputation (Symes amputation), including double below knee amputation and impairments that cause a similar loss of limb
Neurological impairment	Both lower limbs affected Athetosis or ataxia must be observable with involuntary movement of both limbs Hypertonicity will present with Babinski, Clonus and/or Brisk/Different reflexes bilaterally and spasticity = grade 2-1 bilaterally Does not use aids for ambulation Able to run, but will demonstrate difficulty with sudden change in direction. Single leg stance greater than 3 sec. Able to hop, but difficulty remaining on one spot

	Impaired performance of advanced balance and co-ordination skills (grapevine, jump and turn, heal-shin)
Technical	Skis with 2 skis, 2 poles/outriggers Lower limb prosthesis or orthosis must comply with the IPC Alpine Skiing Equipment Rule Book.
LW4	**Minimal criteria (Unilateral lower limb impairment)**
Muscle power impairment	Total score of 30 or less (normal = 40) in one leg on the Oxford Scale
Limb deficiency	At minimum unilateral through ankle amputation (Symes amputation), including below knee amputation and impairments that cause a similar loss of limb)
Neurological impairment	Nerve injury resulting in muscle power impairment or limb deficiency as listed above
Technical	Skis with 2 skis, 2 poles Lower limb prosthesis or orthosis must comply with the IPC Alpine Skiing Equipment Rule Book.
LW5/7	**Minimal criteria (Bilateral upper limb impairment)**
LW 5/7-1	
Muscle power impairment	Equivalent activity limitation to that of an athlete with double above elbow amputations; neither hand is able to hold and use a ski pole
Limb deficiency	Bilateral above elbow amputation Bilateral limb deficiency, with residual limb length equivalent to bilateral above elbow amputations
Neurological impairment	Nerve injury resulting in muscle power impairment or limb deficiency as listed above
Technical	2 skis, no poles Upper limb prosthesis or orthosis must comply with the IPC

	Alpine Skiing Equipment Rule Book.
LW 5/7-2	
Muscle power impairment	Equivalent activity limitation to that of an athlete with an above elbow amputation, and below elbow amputation; neither hand is able to hold and use a ski pole
Limb deficiency	One arm amputated above the elbow and one below the elbow. Bilateral limb deficiency, with residual limb lengths equivalent to a one arm above elbow amputation and the other below elbow amputation.
Neurological impairment	Nerve injury resulting in muscle power impairment or limb deficiency as listed above
Technical	2 skis, no poles Upper limb prosthesis or orthosis must comply with the IPC Alpine Skiing Equipment Rule Book.
LW 5/7-3	
Muscle power impairment	Equivalent activity limitation to that of an athlete with bilateral below elbow amputations Neither hand is able to hold and use a ski pole
Limb deficiency	Bilateral below elbow amputation. Bilateral limb deficiency, with residual limb lengths equivalent to below elbow limb amputations. Residual limbs unable to hold and use a ski pole
Neurological impairment	Nerve injury resulting in muscle power impairment or limb deficiency as listed above
Technical	2 skis, no poles Upper limb prosthesis or orthosis must comply with the IPC Alpine Skiing Equipment Rule Book.

LW6/8	Minimal criteria (Unilateral upper limb impairment)
LW 6/8-1	
Muscle power impairment	Equivalent activity limitation to that of an athlete with unilateral above elbow amputations
Limb deficiency	Unilateral above elbow amputation Unilateral limb deficiency, with residual limb length equivalent to unilateral above elbow amputation
Neurological impairment	Nerve injury resulting in muscle power impairment or limb deficiency as listed above
Technical	2 skis, 1 pole Upper limb prosthesis or orthosis must comply with the IPC Alpine Skiing Equipment Rule Book.
LW 6/8-2	
Muscle power impairment	Equivalent activity limitation to that of an athlete with a unilateral below elbow amputation.
Limb deficiency	Unilateral below elbow amputation Unilateral limb deficiency, with residual limb length equivalent to unilateral through the elbow amputation. Residual limb is unable to hold and use a ski pole.
Neurological impairment	Nerve injury resulting in muscle power impairment or limb deficiency as listed above
Technical	2 skis, 1 pole Upper limb prosthesis or orthosis must comply with the IPC Alpine Skiing Equipment Rule Book.

LW9	Minimal criteria (Ipsilateral or contralateral upper limb and lower limb impairment)	
LW 9-1		
Muscle power impairment	Lower limb	Total score of less than 20 (normal = 40) in one leg on the Oxford Scale
	Upper limb	Equivalent activity limitation to that of either an athlete with unilateral above elbow, or below elbow amputation.
Limb deficiency	Lower limb	Above knee amputation or impairments that cause a similar loss of limb
	Upper limb	Unilateral above or below elbow amputation Unilateral limb deficiency, with residual limb length equivalent to either unilateral above or elbow amputation.
Neurological impairment (hemiplegic involvement)	Lower limb	May present with Athetosis or Ataxia Will present with Babinski, Clonus and/or Brisk/Different reflexes Spasticity = grade 3-2 on impaired side Ambulant without assistive devices, but will present with a limp. Unable to hop on impaired side. Unable to side step towards impaired side Single leg stance less than 3 sec on impaired side. Unable to heel walk.
	Upper limb	Spasticity = grade 3-2 on impaired side Impairment noted on upper limb co-ordination tests compared to non-affected side. Equivalent activity limitation to either above or

		below elbow amputation.
Technical	1 or 2 skis, 1or 2 poles or outriggers Upper and lower limb prosthesis or orthosis must comply with the IPC Alpine Skiing Equipment Rule Book	
LW 9-2		
Muscle power impairment	Lower limb	Total score of 30 or less (normal = 40) in one leg on the Oxford Scale
	Upper Limb	Equivalent activity limitation to that of either an athlete with unilateral above elbow, or below elbow amputation.
Limb deficiency	Lower limb	At minimum unilateral through ankle amputation (Symes amputation) or impairments that cause a similar loss of limb
	Upper Limb	Equivalent activity limitation to that of either an athlete with unilateral above elbow, or below elbow amputation.
Impaired neurological (hemiplegic involvement)	Lower limb	May present with Athetosis or Ataxia Will present with Babinski, Clonus and/or Brisk/Different reflexes Spasticity = grade 2-1 on impaired side Ambulant without assistive devices, but will present with a limp. Single leg stance on impaired side greater than 3 sec. Able to hop on impaired side, but difficulty remaining on one spot Side step towards impaired side more laboured than intact side. Able to heel walk, approx. 2m

	Upper limb	Spasticity = grade 2-1 on impaired side Impairment noted on upper limb co-ordination tests compared to non-affected side. Equivalent activity limitation to either above or below elbow amputation
Technical	2 skis, 1or 2 poles or outriggers Upper and lower limb prosthesis or orthosis must comply with the IPC Alpine Skiing Equipment Rule Book.	

Sitting Sport Classes LW 10 to LW 12

LW10	Minimal criteria
LW10-1	
Muscle power impairment	Absent activity of upper and lower abdominals and spinal extensors; score of 0 (zero) on the Oxford scale
Neurological impairment	Neurological impairment presenting with trunk impairment as described above
Functional presentation	No active sitting balance Functional Bench Test Score 0-4
Technical	Sit ski and 2 outriggers
LW10-2	
Muscle power impairment	Activity of upper abdominals and spinal extensors equaling a score of 1 (one) or greater on the Oxford scale Absent activity of lower abdominals and spinal extensors; score of 0 (zero) on the Oxford scale
Neurological impairment	Neurological impairment presenting with trunk impairment as described above

Functional presentation	Minimal active sitting balance Functional Bench Test Score 4-8
Technical	Sit ski and 2 outriggers
LW11	**Minimal criteria**
Muscle power impairment	Full activity of upper abdominals and spinal extensors; score of 4 (four) or greater on the Oxford scale Partial or full activity of lower abdominals and spinal extensors; score of 1 (one) or greater on the Oxford scale No muscle power in flexion, extension, abduction and adduction at both hips
Neurological impairment	Neurological impairment resulting in muscle power impairment as described above Diplegia with functional trunk impairment
Functional presentation	Fair active sitting balance Functional Bench Test Score 9-15
Technical	Sit ski and 2 outriggers
LW12	**Minimal criteria**
LW12-1	
Muscle power impairment	Full activity of upper abdominals and spinal extensors ;score of 4 (four) or greater on the Oxford scale Partial or full activity of lower abdominals and spinal extensors; score of 1(one) or greater on the Oxford scale Ascore of 10 or less around one hip (normal = 20) <u>or</u> a score of 30 or less across both hips (normal = 40)
Limb loss/deficiency impairment	Unilateral hip disarticulation/congenital absence or dysmelia or amputation of lower limbs with muscle power loss as above

Neurological impairment	Neurological impairment or diplegia presenting with muscle power impairment as described
Functional presentation	Functional Bench Test Score = 16-18 Good sitting balance
Technical	Sit ski and 2 outriggers
LW12-2	
Muscle power impairment	Total score of 30 or less (normal = 40) in one leg on the Oxford Scale
Limb loss/deficiency impairment	Unilateral through ankle amputation Unilateral limb deficiency, with residual limb length equivalent to a through ankle amputation
Neurological impairment	Neurological impairment or diplegia presenting with muscle power impairment as described
Functional presentation	Functional Bench Test 16-18
Technical	Sit ski and 2 outriggers

Appendix two: Eligibility criteria and sport classes for athletes with visual impairment

1 Introduction

1.1 IPC Alpine Skiing and Snowboard has designated Sport Classes for athletes with visual impairment, which are defined in this appendix.

1.2 IPC Alpine Skiing and Snowboard is currently revisiting the Sport Classes for athletes with visual impairment and is aiming towards sport-specific classification systems on the basis of activity limitations that result from impairment. Until such a system is approved, the processes detailed in this appendix apply to athlete evaluation in respect of Sport Classes for athletes with visual impairment.

1.3 The processes detailed in this appendix apply to athlete evaluation in respect of Sport Classes for athletes with visual impairment.

1.4 The Sport Class allocated to athletes with visual impairment applies to all events offered by IPC Alpine Skiing and Snowboard.

1.5 All provisions of the IPC Alpine Skiing Classification Rules and Regulations apply to the assessment of athletes with visual impairment, except if otherwise specified in this appendix.

2 Eligibility criteria

2.1 To be eligible to compete in Sport Classes B1-B3 in IPC Alpine Skiing, the athlete must meet both of the criteria below:

2.1.1 The Athlete must have at least one of the following impairments:

- impairment of the eye structure;
- impairment of the optical nerve/optic pathways;
- impairment of the visual cortex.

2.1.2 The athlete's visual impairment must result in a visual acuity of less than or equal to LogMAR 1.0 or a visual field restricted to less than 20 degrees radius.

2.2 It is the athlete's and NPC's responsibility to provide sufficient evidence of the athlete's visual impairment. This must be done by way of submitting medical diagnostic information completed by an ophthalmologist no later than at the beginning of athlete evaluation.

2.3 The medical diagnostic information must comprise the completed Medical Diagnostics Form (available on the IPC Alpine Skiing and Snowboard website) and additional medical documentation as indicated on the Medical Diagnostics Form. Failure to present with complete medical diagnostic information might lead to athlete evaluation being suspended in accordance with article 4.7 of these Rules.

2.4 Medical Diagnostic Information must be typewritten and submitted in English and may not be older than 12 months prior to the date of athlete evaluation.

3 Assessment methods

3.1 All Athlete evaluation and Sport Class allocation will be based on the assessment of visual acuity in the eye with better visual acuity when wearing the best optical correction.

3.2 Depending on an athlete's visual acuity, visual acuity is tested using the LogMAR chart for distance visual acuity testing with Illiterate "E" and/or the Berkeley Rudimentary Vision Test.

3.3 Athletes who compete using any corrective devices (e.g. glasses, lenses) must attend classification with these devices and their prescription.

3.4 An athlete found to be using corrective devices during competition that were not declared during athlete evaluation may be subject to further investigation of Intentional Misrepresentation (see Article Nine).

3.5 Athletes must declare any change in their optical correction to IPC Alpine Skiing and Snowboard before any competition. If the athlete has a Sport Class Status Review with Fixed Review Date or Confirmed, the Athlete's Sport Class Status will be changed to Review. The Athlete will then undergo Athlete Evaluation prior to the next competition under the provisions of these Rules. Failure to do so may result in an investigation of Intentional Misrepresentation (see Article Nine).

3.6 Any athlete support personnel accompanying the athlete in the assessment room must remain out of sight of the visual acuity charts during Assessment.

3.7 Under the current provisions set forth in this appendix, observation assessment does not apply to athletes with visual impairment.

3.8 IPC Alpine Skiing and Snowboard will inform the Local Organizing Committee of the equipment and room requirements for the assessment of athletes with visual impairment after the classification panels have been appointed. It is the Local Organizing Committee's responsibility to provide all equipment required by IPC Alpine Skiing and Snowboard.

3.9 Failure to provide all equipment required by IPC Alpine Skiing and Snowboard may result in the classification decisions not being accepted by IPC Alpine Skiing and Snowboard.

4 Sport Classes Profiles for athletes with visual impairment

4.1 Sport Class B1

4.1.1 Visual acuity is poorer than LogMAR 2.60.

4.2 Sport Class B2

4.2.1 Visual acuity ranges from LogMAR 1.50 to 2.60 (inclusive), and/or

4.2.2 the visual field is constricted to a radius of less than 5 degrees.

4.3 Sport Class B3

4.3.1 Visual acuity ranges from LogMAR 1.40 to 1 (inclusive), and/or

4.3.2 the visual field is constricted to a radius of less than 20 degrees.

International Paralympic Committee

Adenauerallee 212-214
53113 Bonn, Germany

Tel. +49 228 2097-200
Fax +49 228 2097-209

ipcalpineskiing@paralympic.org
www.ipc-alpineskiing.org

© 2015 International Paralympic Committee – ALL RIGHTS RESERVED
Photo ©: Getty Images, Malcolm Carmichael

IPC NORDIC SKIING

International
Paralympic Committee

Nordic Skiing Classification Rules and Regulations

Cross-Country Skiing and Biathlon

December 2015

IPC NORDIC SKIING

Official IPC Nordic Skiing Supplier

LISKI SPORT EQUIPMENT

www.IPC-NordicSkiing.org

@IPCNordic ParalympicSport.TV /IPCNordicSkiing

IPC Nordic Skiing Classification Rules and Regulations

December 2015

International Paralympic Committee
Adenauerallee 212-214 Tel. +49 228 2097-200
53113 Bonn, Germany Fax +49 228 2097-209

www.ipc-nordicskiing.org
ipcnordicskiing@paralympic.org

Table of Contents

Table of Contents **2**
Purpose and Organisation of these Rules **5**
Purpose 5
Organisation 5
1 Article One - Scope and Application **7**
International Classification 7
Interpretation, Commencement and Amendment 8
2 Article Two – Classification Personnel **9**
Classification Personnel 9
Classifier Competencies, Qualifications and Responsibilities 10
3 Article Three - Classification Panels **12**
4 Article Four - Athlete Evaluation **13**
Athlete Evaluation Process 13
Athlete Evaluation Requirements 13
Failure to Attend Athlete Evaluation 14
Suspension of Athlete Evaluation 14
Observation Assessment 16
Observation Assessment and First Appearance 17
Changes of Sport Class Following First Appearance 17
5 Article Five - Sport Class and Sport Class Status **18**
Sport Class 18
Sport Class Status 18
Fixed Review Date 20
Changes to Sport Class criteria 20
Errors regarding Sport Class Status 20
Medical Review: Application to undergo Athlete Evaluation 21
Provision involving Multiple Sport Classes 22
Recognition of Sport Classes for Athletes with Visual Impairment of other Sports 22
6 Article Six - Rules Regarding Athletes who are Not Eligible **23**
7 Article Seven - Protests **24**

Protests submissions 24
Resolving a Protest 25
Protests under Exceptional Circumstances 26
Provisions Where No Protest Panel is Available 27
8 Article Eight – Appeals 28
9 Article Nine – Intentional Misrepresentation 29
Misrepresentation during Athlete Evaluation 29
Misrepresentation after Allocation of Confirmed Sport Class 29
Assisting Intentional Misrepresentation 29
10 Glossary of Defined Terms 30
Appendix One: Eligibility Criteria and Sport Classes for Athletes with Physical Impairment 34
1 Eligibility Criteria 34
2 Methods of Assessment 35
Test Table Test 36
Length of prostheses used by athletes with lower limb amputation 39
Observation in Competition 39
3 Sport Class Profiles 40
Sport Class LW2 40
Sport Class LW3 40
Sport Class LW4 41
Sport Class LW5/7 42
Sport Class LW6 42
Sport Class LW8 42
Sport Class LW9 43
Criteria for the Sitting Sport Classes LW10-12 44
Sport Class LW 10 44
Sport Class LW 10.5 45
Sport Class LW 11 45
Sport Class LW 11.5 45
Sport Class LW 12 45

Appendix Two: Eligibility Criteria and Sport Classes for Athletes with Visual Impairment 47
1 Introduction 47
2 Eligibility Criteria 47
3 Assessment Methods 48
4 Sport Classes Profiles for Athletes with Visual Impairment 48

Purpose and Organisation of these Rules

Purpose

These Classification Rules (referred to generally as “the Rules”) provide a framework within which the process of “Classification” may take place. The term “Classification” refers to a structure for Competition the aim of which is to ensure that an Athlete’s Impairment is relevant to sport performance, and to ensure that Athletes compete equitably with each other. The purpose of Classification is to minimise the impact of eligible Impairment types on the outcome of competition, so that Athletes who succeed in competition are those with best anthropometry, physiology and psychology and who have enhanced them to best effect.

Organisation

Articles

Article One	Article One explains that these Rules apply to persons who compete or are otherwise involved in the sport of IPC Nordic Skiing, and how the Rules should be interpreted.
Article Two	Article Two explains that qualified personnel referred to in these Rules as “Classifiers” conduct Athlete Evaluation, with other key “Classification Personnel” being involved.
Article Three	Article Three explains how Classifiers will conduct Athlete Evaluation as part of a Classification Panel.
Article Four	Article Four explains that the process of Classification is carried out by way of Athlete Evaluation under these Rules, and details the specific processes and protocols to be followed during Athlete Evaluation.
Article Five	Article Five explains that Classification is undertaken so that Athletes can be designated a Sport Class (which groups Athletes together in Competition) and allocated a Sport Class Status (which indicates when Athletes should be evaluated and how their Sport Class may be challenged).
Article Six	Article Six explains that one outcome of Athlete Evaluation may be that an Athlete is found not to be eligible to compete in the sport of IPC Nordic Skiing, and the implications that arise if this is the case.
Article Seven	Article Seven explains that an Athlete or other party may dispute the allocation of a Sport Class, and the process by which these disputes should be resolved.

Article Eight	Article Eight explains that the procedure by which a Sport Class is allocated is subject to a limited form of challenge, and how these challenges should be made.
Article Nine	Article Nine explains that if an Athlete or other party attempts to subvert the Athlete Evaluation process, there will be consequences.
Glossary	The Glossary to these Rules contains a list of the defined terms used in these Rules.

Appendices

Appendix One	Appendix One deals with Sport Classes for Athletes with Physical Impairment, and sets out the Minimum Disability Criteria and assessment methodologies that apply in order for an Athlete with Physical Impairment to be eligible to compete in the sport of IPC Nordic Skiing.
Appendix Two	Appendix Two deals with Sport Classes for Athletes with Visual Impairment, and sets out the Minimum Disability Criteria and assessment methodologies that apply in order for an Athlete with Visual Impairment to be eligible to compete in the sport of IPC Nordic Skiing.

1 Article One - Scope and Application

1.1 These Rules are an integral part of the IPC Nordic Skiing Rules and Regulations and are intended to implement the provisions of the IPC Classification Code for the sport of IPC Nordic Skiing.

1.2 These Rules shall apply to -

1.2.1 All Athletes and Athlete Support Personnel who are registered and/ or licensed with IPC Nordic Skiing as defined in the IPC Nordic Skiing Rules and Regulations;

1.2.2 All Athletes and Athlete Support Personnel participating in such capacity in Events and Competitions recognised by IPC Nordic Skiing or any of its members or affiliate organisations or licensees;

1.3 It is the personal responsibility of Athletes, Athlete Support Personnel and Classification Personnel to acquaint themselves with all of the requirements of these Rules, the IPC Classification Code (see IPC Handbook, Section 2, Chapter 1.3) and the other sections of the IPC Handbook that apply to Classification, including the IPC Position Statement on Background and Scientific Rationale for Classification in Paralympic Sport (see IPC Handbook, Section 2, Chapter 4.4)

International Classification

1.4 Athlete Evaluation that is conducted in full compliance with these Rules is referred to as International Classification. IPC Nordic Skiing will only recognize Sport Class and Sport Class Status if allocated by way of International Classification.

1.5 IPC Nordic Skiing will provide Athletes with an opportunity to undertake International Classification by appointing Classifiers certified pursuant to Article Two to conduct Athlete Evaluation at Recognized Competitions, and by providing reasonable notice of such International Classification opportunities to Athletes and National Bodies.

1.6 An Athlete will only be permitted to undergo International Classification if he or she:

1.6.1 Is registered and/ or licensed with IPC Nordic Skiing pursuant to the relevant provisions in the IPC Nordic Skiing Rules and Regulations, and

1.6.2 Has been entered in a Recognised Competition where International Classification is to take place.

Interpretation, Commencement and Amendment

1.7 These Rules shall be interpreted and applied at all times in a manner that is consistent with the IPC Classification Code.

1.8 These Rules shall come into full force and effect on the Effective Date as specified by IPC Nordic Skiing.

1.9 Amendments to these Rules shall be approved and shall come into effect in the manner prescribed by IPC Nordic Skiing. IPC Nordic Skiing may at any time amend, update or otherwise alter the text, meaning and effect of the Appendices independently of these Rules.

2 Article Two – Classification Personnel

2.1 Classification Personnel are fundamental to the effective implementation of these Rules. This Article Two explains how IPC Nordic Skiing Classification Personnel assist in the delivery of classification under these Rules.

Classification Personnel

2.2 IPC Nordic Skiing should appoint the following Classification Personnel, each of whom will have a key role in the administration, organisation and execution of classification for IPC Nordic Skiing:

2.3 Head of Classification

2.3.1 The Head of Classification for IPC Nordic Skiing will be appointed by IPC Nordic Skiing to be responsible for the direction, administration, coordination and implementation of all classification matters for IPC Nordic Skiing.

2.3.2 IPC Nordic Skiing may delegate the role of Head of Classification to a nominated person or group of persons, such persons being identified publicly as such by IPC Nordic Skiing.

2.3.3 The Head of Classification in conjunction with IPC Nordic Skiing Management is responsible for appointing Classification Panel(s) that will conduct International Classification at Recognised Competitions.

2.4 Classifiers

2.4.1 A Classifier is a person authorised and certified by IPC Nordic Skiing as being competent to conduct Athlete Evaluation. IPC Nordic Skiing will specify from time to time the means by which it shall certify Classifiers.

2.4.2 IPC Nordic Skiing Classifiers are required, as appropriate, to assist in the research, development and clarification of the Classification Rules and Sport Class profiles for IPC Nordic Skiing; participate in Classifier workshops arranged by IPC Nordic Skiing and/or the IPC from time to time; and attend such Classifier training as requested from time to time by the IPC Nordic Skiing.

2.4.3 The Head of Classification may be appointed as Classifier and/ or Chief Classifier.

2.5 Chief Classifiers

2.5.1 A Chief Classifier is a Classifier who is appointed by IPC Nordic Skiing to act as the senior Classifier present at a specific IPC Nordic Skiing Recognized Competition.

2.5.2 A Chief Classifier is responsible for the direction, administration, co-ordination

and implementation of classification matters at a Competition. In particular, a Chief Classifier may be required by IPC Nordic Skiing to do the following:

2.5.2.1 Identify those Athletes who will be competing at that Competition who will require Athlete Evaluation;

2.5.2.2 Supervise Classifiers to ensure that the Rules are applied appropriately during a specific Competition;

2.5.2.3 Manage the Protest process as required by Article Seven.

2.5.2.4 Liaise with the relevant Competition organiser to ensure that all travel, accommodation and other logistics are arranged in order that Classifiers may carry out their duties at the Competition;

2.6 Trainee Classifiers

2.6.1 IPC Nordic Skiing may appoint Trainee Classifiers in order that they may be certified as a Classifier.

2.6.2 A Trainee Classifier may actively participate in or observe Athlete Evaluation under supervision of a Classification Panel in order to develop the necessary competencies and proficiencies so as to be certified by IPC Nordic Skiing as a Classifier. They will be required to perform any such other duties as IPC Nordic Skiing requires.

Classifier Competencies, Qualifications and Responsibilities

2.7 IPC Nordic Skiing certifies Classifiers who have abilities and qualifications relevant to conduct Athlete Evaluation in respect of Athletes with Physical and/or Visual Impairment.

2.8 IPC Nordic Skiing requires Classifiers to have one of the below qualifications in order to be considered for certification as IPC Nordic Skiing Classifier:

2.8.1 a certified health professional in a field relevant to the Impairment category which IPC Nordic Skiing at its sole discretion deems acceptable, e.g. physicians and physiotherapists for Athletes with Physical Impairment, and ophthalmologists and optometrists for athletes with Visual Impairment.

2.8.2 an extensive coaching or other relevant background in the sport of IPC Nordic Skiing or a recognised and reputable academic qualification which encompasses a requisite level of anatomical, biomechanical and sport-specific expertise, which IPC Nordic Skiing at its sole discretion deems to be acceptable.

2.9 Only classifiers that fulfil the requirements of Article 2.8.1 are entitled to conduct a Physical Assessment (for athletes with physical impairment).

2.10 All Classification Personnel must comply with the standards of behaviour mandated from time to time in the IPC Code of Ethics and the IPC Classifier Code of Conduct. If any Classification Personnel is found to have breached the terms of either the IPC Code of Ethics or the IPC Classifier Code of Conduct, IPC Nordic Skiing will have sole discretion to withdraw any applicable certification or authorisation. IPC Nordic Skiing may also make such recommendations as it sees fit to IPC and any other relevant bodies as regards any certification held by the relevant Classification Personnel to act as Classification Personnel in respect of other sports.

3 Article Three - Classification Panels

3.1 A Classification Panel is a body that is appointed by IPC Nordic Skiing to conduct Athlete Evaluation in accordance with these Rules. A Classification Panel should be comprised of a minimum of two (2) Classifiers. If the circumstances so require, the Head of Classification may designate that a Classification Panel may consist of one suitably accredited and qualified Classifier, who has been certified by IPC Nordic Skiing to conduct Physical Assessment (see Article 2.9). A Classification Panel consisting of one Classifier may only allocate a Sport Class designated with Sport Class Status Review (R) (see Article 5.11.2 below).

3.2 IPC Nordic Skiing and competition organizers will whenever possible ensure that at least two Classification Panels are able to conduct Athlete Evaluation for each Impairment category (Physical Impairment and Visual Impairment, assuming that Events are offered for both Impairment categories).

3.3 Classification Personnel should have no relationship with any Athlete or Athlete Support Personnel present at a Competition or otherwise that might create any actual or perceived bias or Conflict of Interest. Classification Personnel must disclose to IPC Nordic Skiing any actual or perceived bias or Conflict of Interest that may be relevant to their appointment as a member of any Classification Panel.

3.4 IPC Nordic Skiing will wherever possible ensure that Classifiers who act as members of a Classification Panel at a Competition will not have any official responsibilities other than in connection with Athlete Evaluation.

3.5 A Classification Panel may seek third party expertise of any nature if it considers in its sole discretion that this would assist it in completing the process of Athlete Evaluation.

4 Article Four - Athlete Evaluation

4.1 Athlete Evaluation is the process by which an Athlete is assessed by a Classification Panel in order that the Athlete may be allocated a Sport Class and a Sport Class Status.

Athlete Evaluation Process

4.2 The Athlete Evaluation process may encompass the following:

4.2.1 Physical Assessment: The Classification Panel should conduct a Physical Assessment of the Athlete, so as to establish that the Athlete has an Eligible Impairment that meets the relevant Minimum Disability Criteria; and/ or

4.2.2 Technical Assessment: The Classification Panel should conduct a Technical Assessment of the Athlete which may include, but is not limited to, an assessment of the Athlete's ability to perform, in a non-competitive environment, the specific tasks and activities that are part of the sport in which the Athlete participates; and/ or

4.2.3 Observation Assessment: The Classification Panel may conduct Observation Assessment, which shall involve observing an Athlete performing the specific skills that are part of the Sport in Competition. Observation Assessment may only take place if a Classification Panel believes that they cannot complete Athlete Evaluation and allocate a fair Sport Class without observing the Athlete in Competition.

4.3 The means by which Physical, Technical and Observation Assessment are to be conducted are specified in the Appendices to these Rules.

Athlete Evaluation Requirements

4.4 The following requirements apply to Athlete Evaluation:

4.4.1 The Athlete and his or her National Body are jointly responsible for ensuring that the Athlete attends Athlete Evaluation.

4.4.2 Athlete Evaluation and its associated processes will be conducted in English. If the Athlete and/or the Athlete Support Personnel require an interpreter, the National Body will be responsible for arranging the attendance of an interpreter.

4.4.3 One person (in addition to any required interpreter) may accompany an Athlete during Athlete Evaluation. This person should be familiar with the Athlete's Impairment and sporting history and must be a member of the Athlete's National Body or must be otherwise authorised in advance by the Chief Classifier to attend the Athlete's Athlete Evaluation.

4.4.4 The Athlete must accept the terms of the IPC Nordic Skiing Evaluation Consent Form prior to participating in Athlete Evaluation. The Athlete must provide identification, such as a passport, ID Card, IPC Nordic Skiing License Card or Accreditation that verifies the Athlete's identity to the satisfaction of the Classification Panel.

4.4.5 The Athlete must attend Athlete Evaluation with all sports equipment and attire used in competition.

4.4.6 The Athlete must attend Athlete Evaluation with all relevant medical documentation (in English or with a certified English translation), including but not limited to medical reports, medical records and diagnostic information, which relate to the Athlete's Impairment.

4.4.7 The Athlete must disclose either prior to, or at, Athlete Evaluation details of any medication used by the Athlete.

4.4.8 The Classification Panel may use video footage and/or any other records (including pre-existing video footage and/or records) to assist it in carrying out Athlete Evaluation. In addition, the Classification Panel may video-record any part of Athlete Evaluation if it considers that such recording is necessary to enable it to complete Athlete Evaluation. Any such recording will be used for the purposes of Athlete Evaluation only and may be used for research and education purposes with the Athlete's prior consent.

4.4.9 The Classification outcomes will be published at the Competition by the Chief Classifier or a person authorized by the Chief Classifier.

Failure to Attend Athlete Evaluation

4.5 If an Athlete is required to attend Athlete Evaluation, but fails to do so, the Classification Panel will report the fact of the non-attendance to the Chief Classifier. The Chief Classifier may, if satisfied that a reasonable explanation exists for the failure to attend Athlete Evaluation, specify a revised time and date for Athlete Evaluation at the relevant Competition.

4.6 If the Athlete fails to attend Athlete Evaluation on this second occasion, or is, in view of the Chief Classifier, unable to provide a reasonable explanation of his or her non-attendance, the Athlete will not be permitted to compete at the relevant Competition.

Suspension of Athlete Evaluation

4.7 A Classification Panel may suspend Athlete Evaluation in one or more of the following circumstances:

4.7.1 if the Athlete fails to meet any of the requirements detailed in these Rules for

attendance at Athlete Evaluation (see Article 4.4 above);

4.7.2 if the Classification Panel considers that the use (or non-use) of any medication disclosed by the Athlete will affect its ability to conduct Athlete Evaluation in a fair manner;

4.7.3 if an Athlete fails to produce sufficient medical documentation and the Classification Panel considers that the absence of such medical documentation will affect its ability to conduct Athlete Evaluation in a fair manner;

4.7.4 if an Athlete has a health condition (of any nature or description) that limits or prohibits the Athlete from complying with requests made by the Classification Panel during the course of Athlete Evaluation, which the Classification Panel considers will affect its ability to conduct Athlete Evaluation in a fair manner (e.g. pain);

4.7.5 if an Athlete refuses to comply with any reasonable instructions given to him or her by a Classification Panel (or a Chief Classifier or the relevant Head of Classification) during the course of Athlete Evaluation to an extent that Classification Panel considers that this means it cannot conduct Athlete Evaluation in a fair manner. Such behavior shall be referred to as a case of Non-Cooperation. (see IPC Classification Code, Article 10);

4.7.6 if an Athlete's presentation of his or her abilities is inconsistent with other information made available to the Classification Panel to the extent that the Classification Panel considers that this means it cannot conduct Athlete Evaluation in a fair manner.

4.8 If a Classification Panel suspends an Athlete Evaluation the following steps will be taken:

4.8.1 the Classification Panel will explain the reason for the suspension to the Athlete and the Athlete's National Body and detail the remedial action that is required on the part of the Athlete.

4.8.2 the Classification Panel will report the fact of the suspension to the Chief Classifier. The Chief Classifier will specify a time and date for resumption of the Athlete Evaluation on the condition that the Athlete takes the remedial action specified by the Classification Panel.

4.9 If the Athlete attends Athlete Evaluation having taken the remedial action to the Classification Panel's satisfaction, the Classification Panel will attempt to complete the Athlete Evaluation and allocate a Sport Class and Sport Class Status. This procedure will be subject to the Classification Panel's right to further suspend Athlete Evaluation according to Article 4.7.

4.10 If the Athlete fails to take the remedial action required to the Classification Panel's satisfaction and within the time specified by the Chief Classifier, the Classification Panel will terminate the Athlete Evaluation and IPC Nordic Skiing will designate the Athlete as being "Classification Not Completed" (CNC) within the Classification Master List for IPC Nordic Skiing. This designation will preclude the Athlete from competing at any Competition until Athlete Evaluation is completed. IPC Nordic Skiing will stipulate from time to time how this designation impacts on performance recognition.

4.11 The Athlete and/ or Athlete Support Personnel may be subject to further investigation regarding Intentional Misrepresentation pursuant to Article Nine.

Observation Assessment

4.12 If a Classification Panel requires an Athlete to complete Observation Assessment following completion of Physical and Technical Assessment in order that the Athlete can be allocated a Sport Class, the provisions regarding Observation Assessment will apply.

4.13 Pending completion of Observation Assessment, the Athlete will be allocated a Sport Class with a Tracking Code:

4.13.1 If the Athlete has entered the relevant Competition with Sport Class Status New (N), the Athlete will be allocated the Tracking Code Competition New Status (CNS);

4.13.2 If the Athlete has entered the relevant Competition with Sport Class Status Review (R), the Athlete will be allocated the Tracking Code Competition Review Status (CRS);

4.14 An Athlete will retain the Sport Class and Tracking Code until Observation Assessment is satisfactorily completed.

Observation Assessment and First Appearance

4.15 Observation Assessment, if required by the Classification Panel for the respective Athlete, is conducted during the Athlete's First Appearance.

4.16 First Appearance is the first time that an Athlete competes in an Event during a Competition. First Appearance in one Event within a Sport Class shall apply to all other Events within the same Sport Class, except if otherwise stipulated in the Appendices to these Rules.

4.17 After satisfactorily completing Observation Assessment, the Classification Panel will allocate the Athlete a Sport Class and designate the Athlete with a Sport Class Status. The Tracking Code will then be removed.

Changes of Sport Class Following First Appearance

4.18 If an Athlete makes his or her First Appearance with a Sport Class and Tracking Code, the Athlete may be allocated a different Sport Class after the Observation Assessment is completed.

4.19 The impact of an Athlete changing Sport Class after First Appearance on medals, records and results is detailed in the Model of Best Practice on Sport Class Changes following First Appearance (IPC Handbook, Section 2, Chapter 1.3) and/or the IPC Nordic Skiing Rules and Regulations.

5 Article Five - Sport Class and Sport Class Status

5.1 A Sport Class is a sporting competition category that is allocated to an Athlete following Athlete Evaluation. It is allocated based on the existence of an Eligible Impairment and compliance with the Minimum Disability Criteria, and the degree to which Impairment impacts upon sport performance.

Sport Class

5.2 A Sport Class will be allocated to an Athlete by a Classification Panel following Athlete Evaluation. A Sport Class cannot be allocated to an Athlete in any other circumstances.

5.3 The decision of the Classification Panel to allocate a Sport Class is final and subject to challenge only as prescribed in Article Seven and Article Eight of these Rules.

5.4 A Sport Class that enables an Athlete to compete in the sport of IPC Nordic Skiing will be allocated if that Athlete has an Eligible Impairment that complies with the Minimum Disability Criteria set by IPC Nordic Skiing. The requirements regarding Eligible Impairment and Minimum Disability Criteria are detailed in the Appendices to these Rules.

5.5 If an Athlete does not have an Eligible Impairment or has an Eligible Impairment that does not comply with the Minimal Disability Criteria, he or she will not be eligible to compete within the sport of IPC Nordic Skiing. If an Athlete is not eligible to compete he or she will be allocated Sport Class “Not Eligible” (see Article Six).

5.6 The Sport Class allocated to the Athlete will be in accordance with the Sport Class designations as explained in the Appendices to these Rules.

Sport Class Status

5.7 An Athlete’s Sport Class Status indicates whether or not an Athlete will be required to undertake Athlete Evaluation again in the future, and whether (and by what party) the Athlete’s Sport Class may be subject to challenge by way of Protest as prescribed in Article Seven of these Rules.

5.8 The Sport Class Status designated to an Athlete will be one of the following:

- Sport Class New (N)
- Sport Class Review (R)
- Sport Class Confirmed (C)

5.9 Athletes with Sport Class Status New (N)

5.9.1 An Athlete will be designated with Sport Class Status New (N) if a National Body has allocated an Entry Sport Class to him or her, and the Athlete has not

completed International Classification yet.

5.9.2 An Athlete who has been designated with Sport Class Status New (N) must complete Athlete Evaluation prior to competing at any IPC Nordic Skiing Recognised Competition where Classification is offered.

5.10 Athletes with Sport Class Status Review (R)

5.10.1 A Classification Panel will designate an Athlete with Sport Class Status Review (R) if he or she has completed Athlete Evaluation and been allocated a Sport Class, but the Classification Panel believes that further Athlete Evaluation will be required before the Athlete can be designated as Sport Class Confirmed (C). This may be, for a range of reasons, for example, because the Athlete has a fluctuating and/or progressive Impairment(s), or, given his or her age, has Impairment(s) that may not have stabilised.

5.10.2 Any Athlete who has been allocated Sport Class Not Eligible (NE) will be designated with Sport Class Review (R) if that Athlete is entitled to a further Athlete Evaluation under these Rules (see Article Six).

5.10.3 An Athlete who has been designated with Sport Class Status Review (R) must complete Athlete Evaluation prior to competing at a Recognised Competition where Classification is offered, save where the provisions in these Rules relating to the Fixed Review Date apply (see Articles 5.12-15).

5.10.4 The Sport Class of any Athlete with Sport Class Status Review (R) may be subject to Protest by a National Body as prescribed in Article Seven of these Rules.

5.11 Athletes with Sport Class Status Confirmed (C)

5.11.1 A Classification Panel will designate an Athlete with Sport Class Confirmed (C) if he or she has completed Athlete Evaluation and has been allocated a Sport Class, and the Classification Panel is satisfied that the Athlete's Impairment and/or Activity Limitations are sufficiently stable so that the Athlete can be allocated Sport Class Status Confirmed.

5.11.2 Sport Class Status Confirmed may not be allocated if the Classification Panel consists of one Classifier only.

5.11.3 Any Athlete who has been allocated Sport Class Not Eligible (NE) will be designated with Sport Class Confirmed (C) if that Athlete is not entitled to a further Athlete Evaluation under these Rules (see Article Six).

5.11.4 An Athlete who has been designated with Sport Class Status Confirmed (C) is not required to undergo Athlete Evaluation prior to competing at any Competition.

5.11.5 The Sport Class of any Athlete who enters a Competition with Sport Class Status Confirmed (C) may be subject to Protest pursuant to the provisions in

Articles 7.24-7.26 of these Rules relating to Protests under Exceptional Circumstances.

Fixed Review Date

5.12 A Classification Panel that allocates Sport Class Status Review may also, if it considers it appropriate to do so, nominate a "Fixed Review Date".

5.13 If a Fixed Review Date is set in this manner, then

5.13.1 the Athlete will not be required to attend Athlete Evaluation at any competition prior to the Fixed Review Date; and

5.13.2 The Athlete will retain the Sport Class assigned to that Athlete and be permitted to compete with that Sport Class.

5.14 The Athlete may, at his or her own request, attend Athlete Evaluation before the Fixed Review Date pursuant to the Medical Review Process described in these Rules (see Articles 5.19-5.24).

5.15 The Fixed Review Date will be the first day of the Competition Season, which for IPC Nordic Skiing is 1 July, or an alternative date set by the Classification Panel.

Changes to Sport Class criteria

5.16 If IPC Nordic Skiing changes any Sport Class criteria and/ or assessment methods defined in the Appendices to these Rules, then –

5.16.1 IPC Nordic Skiing may re-assign any Athlete with Sport Class Status Confirmed with Sport Class Status Review in order for the Athlete to undergo Athlete Evaluation; or

5.16.2 IPC Nordic Skiing may remove the Fixed Review Date for any Athlete in order for the Athlete to undergo Athlete Evaluation at the earliest available opportunity; and

5.17 In both instances the relevant National Body shall be informed as soon as is practicable.

Errors regarding Sport Class Status

5.18 If the Head of Classification believes on reasonable grounds that an Athlete has been designated with a Sport Class Status in manifest error and/or clear breach of these Rules, he or she shall

5.18.1 advise the Athlete and the relevant National Body or Bodies as to the error or breach that has taken place with a brief statement of the reasons for that belief;

and

5.18.2 immediately amend the Athlete's Sport Class Status, and advise the Athlete and the relevant National Body or Bodies. IPC Nordic Skiing will make the appropriate amendment to the Classification Master List.

Medical Review: Application to undergo Athlete Evaluation

5.19 An Athlete who has reason to believe that his or her Impairment and Activity Limitations are no longer consistent with the profile for his or her Sport Class should have his or her Sport Class reviewed. The means by which this can take place is referred to in these Rules as "the Medical Review Process" and the means by which a request for such review is referred to as "a Medical Review Request".

5.20 A National Body must make a Medical Review Request. A Medical Review Request cannot be made by an Athlete.

5.21 A Medical Review Request may be made if an Athlete has been allocated:

5.21.1 A Sport Class with Sport Class Status Confirmed (C), or

5.21.2 A Sport Class with Sport Class Status Review (R), if the Athlete has been allocated a Fixed Review Date

5.22 A Medical Review Request must be made by completing the IPC Medical Review Request Form and by following its instructions. The Athlete and his or her NPC must ensure that the Medical Review Request abides by the following provisions:

5.22.1 it must explain that the Athlete's relevant Impairment has changed since the last Athlete Evaluation to an extent that the Athlete's Sport Class might not be accurate anymore;

5.22.2 it must be completed by an appropriately qualified health professional and include all relevant supporting documentation in English or with a certified English translation;

5.22.3 a non-refundable fee must be paid.

5.23 Each Medical Review Request will be assessed by IPC Nordic Skiing to ensure that all requisite information, documentation and fee have been provided. Once the Medical Review Request is complete, the Head of Classification will, in conjunction with such third parties as he or she considers appropriate, decide whether or not the Medical Review Request should be upheld.

5.24 If the Medical Review Request is upheld the Athlete's Sport Class Status will be amended from Confirmed to Review; or the Athlete's Fixed Review Date will be set aside; and the Athlete will be requested to undertake Athlete Evaluation at the next available opportunity.

Provision involving Multiple Sport Classes

5.25 IPC's general principle is that an Athlete is allocated one Sport Class only, which is either based on a Physical, Visual or Intellectual Impairment.

5.26 The Model of Best Practice on Choice of Sport Class for Athletes with Multiple Impairments (IPC Handbook, Section 2, Chapter 1.3) should be considered by any Athlete who believes that he or she is eligible for more than one Sport Class.

Recognition of Sport Classes for Athletes with Visual Impairment of other Sports

5.27 If brought to the attention of IPC Nordic Skiing that an Athlete with Visual Impairment and Sport Class Status Review with Fixed Review Date or Confirmed with IPC Nordic Skiing holds a different and more recently allocated Sport Class with another IF or Sport, then IPC Nordic Skiing will adopt the Sport Class that indicates the most visual ability, and amend the Sport Class Status to Review. If the Sport Class by the other IF or Sport allocated is Not Eligible, the Athlete's Sport Class of IPC Nordic Skiing will not be changed, but the Sport Class Status will be changed to Review.

6 Article Six - Rules Regarding Athletes who are Not Eligible

6.1 An Athlete must have an Eligible Impairment, and that Eligible Impairment must comply with the Minimal Disability Criteria set by IPC Nordic Skiing in order to be eligible to compete. If a Classification Panel determines that an Athlete does not have such Eligible Impairment, and/or that Eligible Impairment does not comply with the Minimal Disability Criteria, that Athlete will not be eligible to compete.

6.2 If a Classification Panel determines that an Athlete is not eligible to compete the Athlete will be allocated Sport Class Not Eligible (NE).

6.3 If a Classification Panel allocates an Athlete Sport Class Not Eligible (NE) the Athlete will be entitled to undergo a second Athlete Evaluation by a second separate Classification Panel either at that Competition or as soon as practicable thereafter. Pending this second assessment the Athlete will be allocated Sport Class Not Eligible (NE) and designated with Sport Class Status Review (R). The Athlete will not be permitted to compete before such re-assessment.

6.4 If there is no opportunity for a separate Athlete Evaluation to be undertaken at that Competition, IPC Nordic Skiing will take all reasonable steps to ensure the second Athlete Evaluation is undertaken at the earliest opportunity.

6.5 If a second Classification Panel confirms that the Athlete is not eligible the Athlete will not be permitted to compete at that Competition or any future Competitions. The Athlete will be allocated Sport Class Not Eligible (NE) with Sport Class Status Confirmed and there is no further right to Protest unless made under Exceptional Circumstances pursuant to Articles 7.24-7.26.

6.6 A National Body may request that an Athlete with Sport Class Not Eligible (NE) with Sport Class Status Confirmed (C) undertakes Athlete Evaluation, but only by way of a Medical Review Request as defined in these Rules.

6.7 While an Athlete with Sport Class NE will be not eligible to compete within the sport of IPC Nordic Skiing, it will not affect his or her ability to compete in other Para-sports, subject to their rules on Classification.

6.8 If an Athlete is allocated Sport Class Not Eligible, this does not question the presence of a genuine Impairment. It is only a ruling on the eligibility of the Athlete to compete in the sport of IPC Nordic Skiing.

7 Article Seven - Protests

7.1 The term “Protest” is used in these Rules refers to the procedure by which a formal objection to the allocation of a Sport Class is made and subsequently resolved.

7.2 A National Body may make a Protest in respect of a Sport Class of any Athlete who entered the relevant Competition where Classification is offered with either Sport Class Status New (N) or Sport Class Status Review (R).

7.3 The decision that is the subject of the Protest is referred to in this part of the Rules as “the Protested Decision”, and the Athlete in respect of whose Sport Class the Protest is made is referred to as “the Protested Athlete”.

7.4 No National Body may make a Protest in respect of any Athlete who entered the relevant Competition with Sport Class Status Confirmed (C).

7.5 The Chief Classifier for the relevant Competition may make a Protest in respect of any Athlete regardless of their Sport Class Status pursuant to the provisions contained in these Rules regarding Protests under Exceptional Circumstances (see Articles 7.24-7.26).

7.6 An Athlete's Sport Class may only be protested once in any individual Competition, unless an additional Protest is made pursuant to the provisions concerning Protests made in Exceptional Circumstances.

7.7 The National Body making a Protest is responsible for ensuring that all Protest process requirements are observed.

Protests submissions

7.8 A Protest may only be submitted by a National Body, an Athlete cannot submit a Protest.

7.9 The Chief Classifier, or a person designated by IPC Nordic Skiing for the relevant Competition, will be the person authorised to receive Protests on behalf of IPC Nordic Skiing.

7.10 If a Classification decision is published during the Classification Evaluation Period, the National Body must make a Protest within one (1) hour of the Classification decision being published. If a Protest is made during Competition following completion of an Athlete’s Observation in Competition, the Protest must be submitted within fifteen (15) minutes of the Protested Decision being published.

7.11 Protests must be made by way of a designated Protest Form that will be made available by IPC Nordic Skiing at the relevant Competition. The Protest Form will prescribe certain information and documentation that must be submitted with the Protest form. This will include the following:

7.11.1 Name, Nation and Sport of the Athlete whose Sport Class is being protested;

7.11.2 The details of the Protested Decision;

7.11.3 An explanation as to why the Protest has been made and the basis on which the National Body believes that the Protested Decision is flawed;

7.11.4 All documents and other evidence referred to in the Protest;

7.11.5 The signature of the authorised National Body; and

7.11.6 A Protest Fee of 100EUR.

7.12 Upon receipt of the Protest Form the Chief Classifier will conduct a review of the Protest submission. If it appears to the Chief Classifier that the Protest is not made bona fide or is based on mere assertion without credible supporting evidence and/ or the Protest submission is otherwise not in compliance with these Rules, the Chief Classifier shall decline the protest and notify all relevant parties. In such cases the Chief Classifier shall provide a written explanation to the National Body as soon as is practicable. The Protest fee will be retained by IPC Nordic Skiing.

7.13 If the Chief Classifier declines a Protest, the National Body may resubmit the Protest if it is able to remedy the deficiencies identified by the Chief Classifier in respect of the Protest. The time frames for submitting a Protest shall remain the same in such circumstances. If a National Body resubmits a Protest, all protest procedure requirements will apply. A second Protest fee must be paid.

Resolving a Protest

7.14 If the Protest is accepted, the Chief Classifier shall appoint a Classification Panel to conduct Athlete Evaluation in respect of the Athlete. This Classification Panel is referred to as a “Protest Panel”.

7.15 A Protest Panel should comprise, at a minimum, the same number of Classifiers as those comprised in the Classification Panel that made the Protested Decision. Only if practicable given all the circumstances of the Competition, the Protest Panel should comprise Classifiers of equal or greater level of experience and/or certification as who comprised the Classification Panel that made the Protested Decision.

7.16 The Protest Panel must not include any person who was a Member of the Classification Panel that made the Protest Decision. Further, it should not include any person who has been a Member of any Classification Panel that has conducted any Athlete Evaluation in respect of the Protested Athlete within a period of eighteen (18) months prior to the date of the Protest Decision.

7.17 IPC Nordic Skiing will supply all documentation submitted with the Protest Form to the Protest Panel. The Chief Classifier will notify all relevant parties of the time and date for the Athlete Evaluation that will be conducted by the Protest Panel.

7.18 The Protest Panel will conduct Athlete Evaluation in respect of the Protested Athlete

according to the provisions concerning Athlete Evaluation in these Rules.

7.19 The Protest Panel may make enquires of the Classification Panel that made the Protested Decision and the Chief Classifier, if such enquiries will enable the Protest Panel to complete Athlete Evaluation in a fair and transparent manner. In addition, it may seek medical, sport, technical or scientific expertise in its conduct of Athlete Evaluation.

7.20 The Protest Panel will conclude Athlete Evaluation and, if appropriate, allocate a Sport Class. All relevant parties shall be notified of the Protest Panel's decision as quickly as possible following Athlete Evaluation.

7.21 If the Protest is upheld and the Sport Class of the Athlete is changed by the Protest Panel, the Protest Fee will be refunded to the National Body. If the Protest is not upheld and if the Sport Class of the Athlete is not changed by the Protest Panel, the Protest fee will be retained by IPC Nordic Skiing.

7.22 The decision of the Protest Panel is final and is not subject to any further Protest. According to Article 6.3, the Athlete is given the opportunity to a re-assessment if the Sport Class allocated by the Protest Panel is Not Eligible.

7.23 The consequences of an Athlete changing Sport Class after the resolution of a Protest during Competition on medals, records and results are detailed in the Model of Best Practice on Sport Class Changes following First Appearance (IPC Handbook, Section 2, Chapter 1.3).

Protests under Exceptional Circumstances

7.24 A Protest in Exceptional Circumstances may be made in respect of an Athlete if the Chief Classifier believes that because of exceptional circumstances, the Athlete should undertake Athlete Evaluation in order that his or her Sport Class may be reviewed.

7.25 Examples of exceptional circumstances that may arise that may warrant an Athlete participating in Athlete Evaluation include, but are not limited to:

7.25.1 An obvious and permanent change in the degree of Impairment of an Athlete;

7.25.2 An Athlete demonstrating significantly less or greater ability prior to or during Competition which does not reflect the Athlete's current Sport Class;

7.25.3 An error made by a Classification Panel which has led to the Athlete being allocated a Sport Class which is not in keeping with the Athlete's ability; or

7.25.4 Sport Class allocation criteria having changed since the Athlete's most recent evaluation.

7.26 The procedure for the making of a Protest in Exceptional Circumstances shall be as follows:

7.26.1 The Chief Classifier shall advise the Athlete and relevant National Body that a Protest is being made in Exceptional Circumstances;

7.26.2 The Chief Classifier will provide a written summary of the reasons for the making of the Protest, which at a minimum shall explain why the Chief Classifier believes that the Athlete's Sport Class appears to be inconsistent with the Athlete's perceived Impairment(s) and/or Activity Limitation(s) and/ or with these Rules;

7.26.3 The Athlete's Sport Class Status will be amended to Review (R) with immediate effect;

7.26.4 The process for making such a Protest shall be the same as that stated in these Rules in respect of Protests made by National Bodies save that the Chief Classifier is not required to pay a Protest fee.

Provisions Where No Protest Panel is Available

7.27 If a Protest is made and accepted at a Competition, but there is no opportunity for the Protest to be resolved at that Competition (because, for example, it is not possible to form an appropriately constituted Protest Panel), the following provisions will apply:

7.27.1 If the Athlete has been allocated Sport Class Status Confirmed (C), that will be amended to Sport Class Status Review (R);

7.27.2 The Athlete will be permitted (or required) to compete in his or her current Sport Class, pending the resolution of the Protest;

7.27.3 IPC Nordic Skiing will take all reasonable steps to ensure that the Protest is resolved at the earliest opportunity, for example, at the next Competition that the Athlete intends competing at and where International Classification is offered.

8 Article Eight – Appeals

8.1 An Appeal is a formal objection to the manner in which Classification procedures have been conducted is submitted and subsequently resolved.

8.2 If an Athlete believes that an unfair decision has been made pursuant to these Rules, he or she may apply to have that decision set aside following the Appeal procedure.

8.3 A decision will be considered unfair, if it has been made in contravention of the procedures set out in these Rules at Article 3, 4, 5, 6, 7 and 8 of these Rules; and there is some manifest unfairness associated with the decision such that it should be set aside.

8.4 IPC Nordic Skiing has designated the International Paralympic Committee Board of Appeal on Classification (BAC) to act as the hearing body for all Appeals and all Athletes submitting to Athlete Evaluation irrevocably submit to the exclusive, final and binding jurisdiction of the BAC.

8.5 The detailed rules of procedure in respect of Appeals are provided by the IPC in the form of the IPC BAC Bylaws (see IPC Handbook, Section 1, Chapter 2.8). These Rules incorporate the IPC BAC Bylaws, and any Appeal made under these Rules must be made pursuant to the IPC BAC Bylaws.

8.6 The outcome of an Appeal will be that either the relevant decision is upheld, or is set aside. An Appeal decision cannot amend a Sport Class or Sport Class Status.

9 Article Nine – Intentional Misrepresentation

9.1 Intentional Misrepresentation is a violation of these Rules, and will be investigated and potentially sanctioned as provided for in the IPC Intentional Misrepresentation Rules (IPC Handbook, Section 2, Chapter 1.3).

Misrepresentation during Athlete Evaluation

9.2 An Athlete who intentionally misrepresents his or her skills and/or abilities and/or the degree or nature of Physical or Visual to a Classification Panel in the course of Athlete Evaluation with the intention of deceiving or misleading that Classification Panel shall be guilty of Intentional Misrepresentation.

Misrepresentation after Allocation of Confirmed Sport Class

9.3 If following the allocation of a Sport Class an Athlete undertakes any form of corrective treatment (a “medical intervention”), and the Athlete (or any other Participant) knows (or should know) that the medical intervention was intended to result in improved sport performance, the Athlete must provide details of that medical intervention to the IPC at the earliest reasonable opportunity. If the Athlete’s Sport Class is later changed because the Athlete’s sporting performance has improved as a result of (in whole or in part) that medical intervention, but the Athlete failed to disclose that medical intervention to IPC, the Athlete will be charged with Intentional Misrepresentation.

Assisting Intentional Misrepresentation

9.4 Any Athlete or Athlete Support Personnel who knowingly assists, covers up or is any other way involved in any other type of complicity involving Intentional Misrepresentation shall themselves be guilty of Intentional Misrepresentation.

10 Glossary of Defined Terms

Term	Definition
Activity Limitation	Difficulties an individual may have in executing activities.
Appeal	A formal objection to the manner in which Classification procedures have been conducted is submitted and subsequently resolved.
Athlete	Any person who participates in the sport of IPC Nordic Skiing at either International Level (as defined by IPC Nordic Skiing) or National Level (as defined by a National Body) and any other additional person who participates in sport at a lower level if designated by the person's National Body.
Athlete Evaluation	The process by which an Athlete is assessed in accordance with these Rules.
Athlete Support Personnel	Any coach, trainer, manager, interpreter, agent, team staff, official, medical or paramedical personnel working with or treating Athletes participating in or preparing for training and/or Competition.
Classification	A structure for Competition to ensure that an Athlete's Impairment is relevant to sport performance, and to ensure that the Athlete competes equitably with other Athletes.
Classification Evaluation Period	The timeframe prior to the commencement of Events at a Competition within which Physical and Technical Assessment typically takes place.
Classification Master List	The list, made available by IPC Nordic Skiing that identifies the Athletes that participated in International Classification.
Classification Panel	A group of Classifiers appointed by IPC Nordic Skiing to determine Sport Class and Sport Class Status in accordance with these Rules.
Classification Personnel	All persons involved in or associated with the process of Athlete Evaluation, including the Head of Classification, Classifiers, Chief Classifiers and Trainee Classifiers.
Classifier	A person authorized by IPC Nordic Skiing to evaluate Athletes as a member of a Classification Panel.
Competition	A series of individual Events conducted together under the jurisdiction of IPC Nordic Skiing.

Competition Season	The timeframe within which Competitions are held for a particular sport. For summer sports, the Competition Season runs from January 1 of a calendar year until December 31 of the same calendar year. For winter sports, the Competition Season runs from July 1 of a calendar year until June 30 of the next calendar year.
Conflict of Interest	A conflict of interest will arise where a pre-existing personal or professional relationship gives rise to the possibility of that relationship affecting the Classifier's ability to make an objective decision or assessment.
Effective Date	The date upon which these Rules come into force.
Eligible Impairment	An Eligible Impairment is an Impairment the existence of which is a pre-requisite for an Athlete to meet the Minimum Disability Criteria for the sport of IPC Nordic Skiing.
Entry Sport Class	A Sport Class allocated to an Athlete by a National Body prior to an IPC Nordic Skiing Competition to indicate the Sport Class with which the Athlete intends to compete. An Entry Sport Class is an estimate and has no binding effect upon either the Athlete or the body responsible for organising and managing the relevant Competition.
Event	A sub-set of a Competition that requires specific technical and sporting skills.
Fixed Review Date	A date prior to which an Athlete who has been designated with Sport Class Status Review (R) will not be required to undertake Athlete Evaluation, regardless of whether or not that Athlete competes at any Competition. Unless otherwise specified by the Classification Panel, the Fixed Review Date is the first day of the Competition Season of IPC Nordic Skiing, i.e. 1 January for summer sports and 1 July for winter sports.
Head of Classification	A Classifier responsible for all direction, administration, co-ordination and implementation of Classification matters for IPC Nordic Skiing.
Impairment	Problems in body function or structure such as a significant deviation or loss.
Intellectual Impairment	A type of Impairment, which is defined as a limitation in intellectual functioning and adaptive behaviour as expressed in conceptual, social and practical adaptive skills. This impairment originates before the age of 18.
International Classification	Athlete Evaluation that is conducted in full compliance with these Rules.

IPC	International Paralympic Committee
IPC Classification Code	The IPC Classification Code 2007 and accompanying International Standards and any subsequent version or versions of the same.
IPC Classifier Code of Conduct	A set of rules to outline the responsibilities, to guide behaviour and decisions and to identify best practice for an individual Classifier, which is part of the IPC Classification Code International Standard of Classifier Training.
IPC Code of Ethics	The ethical standard that will be applied consistently within the Paralympic Movement, and will be applicable to all IPC sanctioned Events, Competitions and activities.
IPC Handbook	The IPC Handbook is the primary governance instrument for the IPC in its capacity as both an International Federation and the ruling body for the Summer and Winter Paralympic Games. All persons who are subject to the jurisdiction of the IPC are required to abide by its provisions.
Medical Intervention	Any intervention such as surgery, pharmacological intervention or other treatment, which affects the Athlete's Eligible Impairment
Medical Review	The process by which an Athlete can apply to IPC Nordic Skiing to undergo Athlete Evaluation, in order that the Athlete's Sport Class may be reviewed to ensure that the Athlete's Sport Class remains a fair allocation.
Minimum Disability Criteria	The standards set by IPC Nordic Skiing in relation to the degree of Eligible Impairment that must be present in order that an Athlete is deemed to be eligible to compete in the sport of IPC Nordic Skiing.
National Body	A team entity of which an Athlete is a member. Such an entity may be National Federation, National Paralympic Committee or other representative team body.
Not Eligible	Consequence of not meeting the eligibility criteria.
Observation Assessment	The means by which a Classification Panel may complete Athlete Evaluation, if it considers that the only fair way in which it can complete Athlete Evaluation is to observe the Athlete performing the specific skills associated with the sport of IPC Nordic Skiing either prior to or during an Event.
Physical Assessment	The means by which a Classification Panel will determine whether or not an Athlete has an Eligible Impairment and whether that Eligible Impairment complies with the Minimum Disability Criteria.

Physical Impairment	A group of Eligible Impairments affecting an Athlete's biomechanical execution of sporting activities, comprising ataxia, athetosis, hypertonia, impaired muscle power, impaired range of movement, limb deficiency, leg length difference and short stature.
Protest	The procedure by which a formal objection to an Athlete's Sport Class is submitted and subsequently resolved.
Protest Panel	A Classification Panel formed to conduct Athlete Evaluation in respect of an Athlete's Sport Class, where that Sport Class is the subject of a Protest.
Recognised Competition	An umbrella term for IPC Nordic Skiing Competitions, IPC Nordic Skiing Sanctioned Competitions and IPC Nordic Skiing Approved Competitions as defined in the IPC Nordic Skiing Rules and Regulations.
Sport Class	A category defined by IPC Nordic Skiing in which Athletes are categorized by reference to an Activity Limitation resulting from impairment.
Sport Class Status	A Category allocation to each Athlete to indicate evaluation requirements and Protest opportunities.
Technical Assessment	The assessment of an Athlete's ability to perform the tasks and activities required to participate in the sport of IPC Nordic Skiing.
Tracking Code	A temporary designation applied to a Sport Class that indicates that a Sport Class is subject to final determination after Observation Assessment has taken place.
Visual Impairment	An Impairment of the eye structure, optical nerves or optical pathways, or visual cortex of the central brain, which adversely affect an Athlete's vision.

Appendix One: Eligibility Criteria and Sport Classes for Athletes with Physical Impairment

This Appendix outlines the Eligibility Criteria and Sport Classes for Athletes with Physical Impairment in the Sport of Nordic Skiing.

1 Eligibility Criteria

1.1 In order to be eligible to compete in IPC Nordic Skiing, athletes must be affected by at least one of the following eligible impairments:

- Limb Deficiency: total or partial absence of the bones or joints of the shoulder region, upper extremities, pelvic region or lower extremities (s720-750)
- Impaired passive range of Motion: limitations in joint mobility (b7100-7102)
- Impaired muscle power (b730)
- Leg length difference: aberrant dimensions of bones of right lower limb or left lower limb (s75000-75020)
- Hypertonia: high muscle tone (b735)
- Ataxia: absence of control of voluntary movement (b760)
- Athetosis: involuntary contractions of muscles (b7650)

1.2 The following impairment types are non-eligible impairments in IPC Nordic Skiing:

- Mental functions (v140-189), including impairments of psychomotor control (b1470), quality of psychomotor functions (b1471), visuospatial perception (b1565), higher-level cognitive functions required for organization and planning movement (b1641); mental functions required for sequencing and coordinating complex, purposeful movements (b176)
- Hearing functions (b230-249)
- Pain (b280-0289)
- Joint instability (b715), including unstable shoulder joint and joint dislocation
- Muscle endurance functions (b740)
- Motor reflex functions (b750)
- Involuntary movement reaction functions (b755)
- Tics and mannerism (b7652)
- Stereotypies and motor perseveration (b7653)
- Cardiovascular functions (b410-429)

- Respiratory functions (b440-449)
- Functions related to metabolism and the endocrine system (b540-b559)
- Short Stature (s.730.343, s750.343, s760.349)

The codes refer to the WHO manual on International Classification of Functioning Disability and Health.

1.3 An Athlete who is affected by an eligible impairment in combination with any of the non-eligible impairments listed under 1.2 of this Appendix, will however be assessed against the extent of activity limitation resulting from the eligible impairment only.

1.4 If an Athlete has an Activity Limitation resulting from an impairment that is not permanent the Athlete shall be considered ineligible to compete.

1.5 If an Athlete is deemed ineligible for competition under the rules of IPC Nordic Skiing, this does not question the presence of a genuine impairment. This is only a ruling on the eligibility of the Athlete to compete under the Sport Rules of IPC Nordic Skiing.

2 Methods of Assessment

2.1 The IPC Nordic Skiing Classification Rules require that an Athlete undertakes physical and technical assessment in order to be allocated a Sport Class. This is required in order to establish that the Athlete exhibits an impairment that qualifies the Athlete for competition, and that the Athlete exhibits Activity Limitations resulting from that impairment that affect the Athlete's ability to compete. Both of these components are part of the overall eligibility assessment process that is an integral feature of Athlete Evaluation. The physical and technical assessment detailed in this section is complemented with observation in training practical and/or competition if required by the Classification Panel.

2.2 In order to complete Physical and Technical Evaluation, a Classification Panel must have access to medical documentation regarding the athlete's impairment.

2.3 Athletes must attend evaluation with such ski equipment (for example, skis, poles and boots) as they use for competition.

2.4 Manual muscle testing is conducted in accordance with Daniels and Worthingham (2002) modified by testing isometrically at the midpoint of available range of motion. (In: Hislop, H. J., & Montgomery, J. (2002): Daniels and Worthingham's Muscle Testing: Techniques of Manual Examination (7th ed.). Philadelphia: W.B. Saunders Company). Classifiers will also describe the range of motion and any limitations at the time of classification. In case of differences in or changes or lack of anatomic insertion of a muscle, the manual muscle testing score is based on functional strength across the joint at the time of examination.

2.5 For the assessment of athletes with spinal cord injury, the ASIA classification has to be used (accessible at http://www.asia-spinalinjury.org/elearning/ISNCSCI.php, accessed 10/2014)

2.6 Buttock sensibility is measured in accordance with the ASIA Classification (accessible at http://www.asia-spinalinjury.org/elearning/ISNCSCI.php, accessed 10/2014):

0 = absent

1 = altered

2 = normal

NT = Not Testable

2.7 For the assessment of hypertonia, the Ashworth Scale has to be used (Ashworth, B. (1964). Preliminary trial of carisoprodal in multiple sclerosis. Practitioner 192: 540-542).

Test Table Test

2.8 Test-table-testing is conducted in accordance with the protocol described in Pernot et al, (2011, Validity of the test-table-test for Nordic Skiing for classification of Paralympic sit-ski sport participants. Spinal Cord, 49, 935-941).

2.9 The Test-Table-Test Board (Figure 1) consists of a medium density fibreboard padded with specially designed standardized cushions also supporting the legs. The position of these cushions can be adapted to the person's anthropometrics. Velcro straps over the hip joints, knees and ankles are used to secure legs during testing.

Figure 1: Test-Table-Test Board

2.10 This table describes the tests to be conducted with the test table and the scoring system:

Table 1: Test-Table Test	
Test	**Scoring and Abilities**
Test 1 The athlete sit with the hands behind the neck and is asked to forward flex the trunk at the waist as much as possible, then extend the trunk and move to a position of 45° forward flexion indicated by a landmark. The position has to be maintained for 5sec while keeping the hands behind the neck.	**Score 0: No function** The athlete can lean forward but loses balance before 45°
	Score 1: Weak function The athlete can lean forward but not go up against gravity
	Score 2: Fair function The athlete can lean forward and come up with using the head and upper part of the trunk from 45° and above
	Score 3: Normal function The athlete straightens up normal
Test 2 The athlete is asked to fold the arms over the chest, lean back and maintain a 45° backward inclination of the trunk relative to the horizontal for 5sec. Subsequently, the athlete is asked to return to the starting, complete upright, sitting position.	**Score 0: No function** The athlete cannot lean backwards, loses balance
	Score 1: Weak function The athlete can lean some degrees out of centre of gravity. He/she compensates with the head and increases his/her kyphotic position of the upper spine
	Score 2: Fair function The athlete can lean backwards to 45°, but cannot maintain this position
	Score 3: Normal function The athlete straightens up normal
Test 3 The athlete is asked to perform a maximum rotation of the trunk in the long-sitting position in both directions while keeping the	**Score 0: No function** The athlete cannot sit with the arms abducted
	Score 1: Weak function

arms fully abducted.	The athlete only uses the arms when trying to rotate
	Score 2: Fair function The athlete rotates the upper body, but one side is better than the other, or lumbar spine is not following in the rotation
	Score 3: Normal function Normal trunk rotation
Test 4 The athlete is asked to bimanually lift a 1-kg medicine ball over the head from the left to the right and back. Leaning on the ball has to be avoided.	**Score 0: No function** The athlete cannot lift the medicine ball
	Score 1: Weak function The athlete can lift the medicine ball, but cannot hold it with both hands, nor lift it over the head. The athlete uses one hand for stability
	Score 2: Fair function The athlete leans on the medicine ball when putting it down
	Score 3: Normal function Normal function

2.11 The below overview describes the Sport Class allocation criteria for the Sport Classes LW 2 to LW 9, thus for Athletes who compete in a standing position.

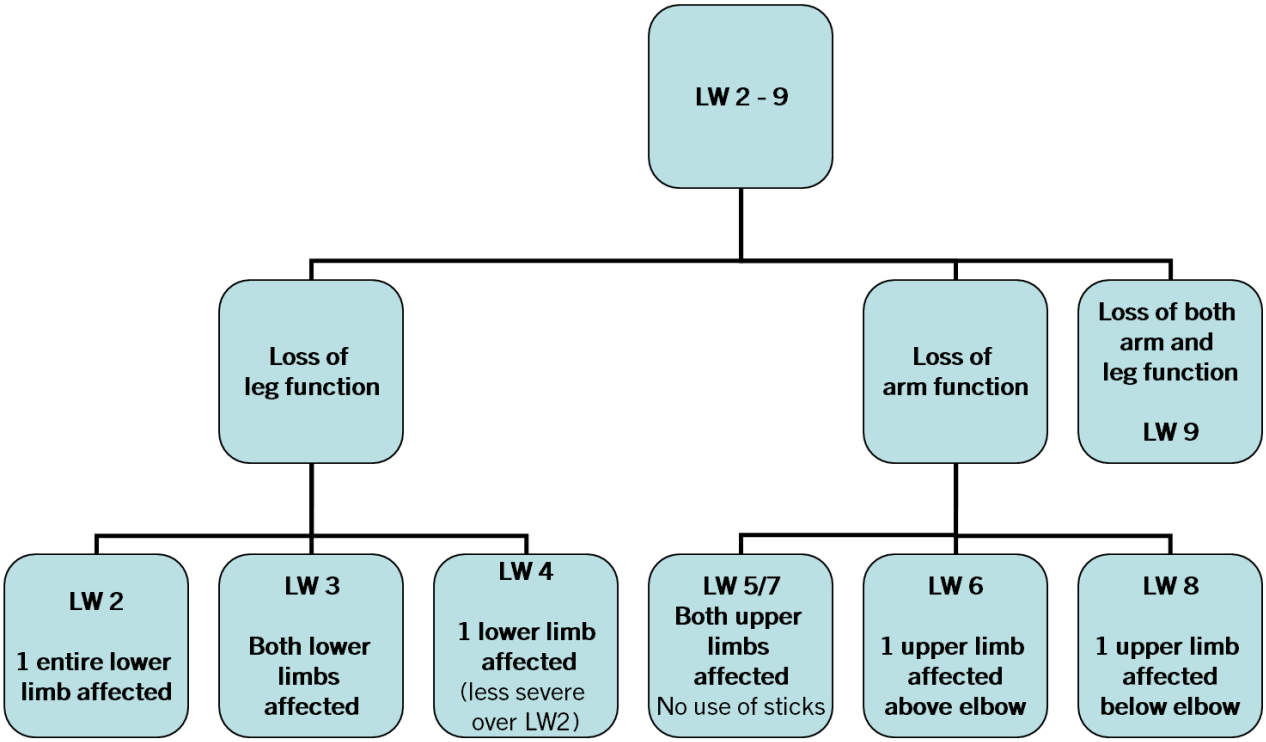

Length of prostheses used by athletes with lower limb amputation

2.12 The length of prosthesis used by athletes with lower limb amputation in IPC Nordic Skiing competitions is defined in accordance with the criteria for prosthetic leg length in the sport of IPC Athletics (detail available in the IPC Athletics Classification Rules and Regulations).

Observation in Competition

2.13 For observation in training and/or competition, the Classification Panel will observe:

- Changing tracks with trunk and hip assistance
- Climbing - trunk assistance
- Downhill - trunk stability and control
- Trunk control in curves
- Leg position*
- Strapping*

(*) for Athletes in Sport Classes LW10-12 only

3 Sport Class Profiles

3.1 The Sport Classes in IPC Nordic Skiing are as follows:

3.1.1 Sport Classes for Standing Skiers: LW 2, LW 3, LW 4, LW 5/7, LW 6, LW 8, LW 9

3.1.2 Sport Classes for Sit-Skiers: LW 10, LW10.5, LW 11, LW 11.5, LW 12

Sport Class LW2

3.2 Athletes eligible for class LW2 are those with an eligible impairment affecting one entire lower limb (including pelvis), meeting one of the following minimum disability criteria:

- Loss of limb through or above the knee
- No range of motion in knee and/or hip, resulting from arthrodesis or ankylosis
- Loss of muscle power resulting in a total score of 64 or less for all muscle groups of the lower limbs and hips, at minimum a loss of 16 points in one lower limb, and a knee flexion/extension score of 2 or less
- Limb deficiency or dysmelia with the length of the affected limb no longer than the length of the femur of the unaffected limb (measured from great trochanter to medical condylis); recent X-ray (<12 months before classification) must be provided)

3.3 The Athlete must ski using two skis and two ski poles.

Sport Class LW3

3.4 Athletes eligible for class LW3 are those with impairment in both lower limbs, affecting the limb in whole or partially, meeting any of the following minimum disability criteria:

- Loss of both limbs at minimum proximal to metatarsals
- Loss of muscle power in both legs, resulting in:
  - A maximum of 65 points for both limbs, AND
  - A minimum of 5 points missing in one leg, AND
  - At least one muscle group in one leg must have a maximum score of 2
- Hypertonia in both legs, resulting in grade 2 or more on the Ashworth Scale in any direction of movement
- Ataxia in both lower limbs observed during at least one of the following tests of voluntary movement:
  - Heel draw test (i.e., draw the heel of one leg along the length of the contralateral shin, from ankle to knee and then in the reverse direction);
  - Straight line heel-to-toe walking;

  - Walking
  - Clearly evident athetosis in both lower limbs is unwanted movement and posturing that is characteristically athetoid and is observable as at least one of the following:
  - Involuntary movement of the toes or lower extremities despite the person trying to remain still.
  - Inability to hold the body still – swaying of the body. Swaying should not be due to other neurological deficits such as vestibular or proprioceptive impairments and therefore should not be exacerbated by closing of the eyes;
  - Characteristic athetoid posturing.
- Limb deficiency or dysmelia resulting in the absence of forefoot structure (recent X-ray (<12 months before classification) must be provided)
- No range of movement in both knee joints

3.5 The Athlete must ski using two skis and two ski poles.

Sport Class LW4

3.6 Athletes eligible for class LW4 are those with an eligible impairment affecting one lower limb below the knee, meeting any of the following minimum disability criterion:

- Loss of limb through or above the ankle joint
- Loss of muscle power in the lower limbs, resulting in:
  - A maximum of 70 points, AND
  - At least loss of 10 points in one leg, AND
  - At least one muscle group in one leg must have a maximum score of 2
- Ataxia in one lower limb observed during at least one of the following tests of voluntary movement:
  - Heel draw test (i.e., draw the heel of one leg along the length of the contralateral shin, from ankle to knee and then in the reverse direction);
  - Straight line heel-to-toe walking;
  - Walking
- Clearly evident athetosis in one lower limb is unwanted movement and posturing that is characteristically athetoid and is observable as at least one of the following:
  - Involuntary movement of the toes or lower extremities despite the person trying to remain still.
  - Inability to hold the body still – swaying of the body. Swaying should not be due to other neurological deficits such as vestibular or proprioceptive impairments and therefore should not be exacerbated by closing of the eyes;
  - Characteristic athetoid posturing
- Leg length difference between both legs of at least 7cm, measured in supine

position, taking the average of two measurements of the distance from anterior superior iliac spine to the tip of the medial malleolus

3.7 The Athlete must ski using two skis and two ski poles.

Sport Class LW5/7

3.8 Athletes eligible for class LW5/7 are those with an impairment in both upper limbs without the use of prosthesis, meeting any of the following minimum disability criterion:

- Loss of limb in both upper limbs, at or proximal to all metacarpophalangeal joints (recent X-ray (<12 months before classification) must be provided)
- Lack of functional grip in both upper limbs, being defined as loss of muscle power in both upper limbs with max score of 2 in finger flexion, finger extension and thumb opposition
- Dysmelia of both hands, resulting in inability to grip and use poles. If the inability to grip and use poles in both hands cannot be overcome by strapping technology (e.g. strap above and below thumb-finger interspace with circumferential wrist strap), the athlete will allocated LW5/7.

3.9 The Athlete must ski using two skis but no ski poles. If the Athlete is able to use a pole he must compete in LW6 or LW8. The use of prosthesis of the upper limbs is not allowed.

Sport Class LW6

3.10 Athletes eligible in class LW6 have an impairment in one entire upper limb, meeting any of the following minimum disability criterion:

- Loss of limb through or above the elbow
- Loss of muscle power, resulting in max scores of 2 for muscle groups in wrist and elbow region.
- Limb deficiency or dysmelia with the length of the affected limb shorter than the length of the humerus of the unaffected limb (recent X-ray (<12 months before classification) is required).

3.11 The Athlete must ski using two skis and one ski pole without the use of a prosthesis. The entire limb must be fixed (non-flexible) to the body for the entire duration of the race.

Sport Class LW8

3.12 Athletes eligible for class LW8 have an impairment in one upper limb, meeting any of the following minimum disability criterion:

- Loss of upper limb below the elbow, at or proximal to all metacarpophalangeal joints
- Lack of functional grip, being defined as loss of muscle power in one upper limb with max score of 2 in finger flexion, finger extension and thumb opposition
- Limb deficiency with the length of the affected limb longer than the length of the humerus of the unaffected limb (recent X-ray (<12 months before classification) is required).
- Maximum of 5 degrees of flexion or extension in the elbow, with no ability to exert force when poling on the affected side
- Dysmelia of one hand, resulting in inability to grip and use poles other than by means of strapping the wrist to the pole. If the inability to grip and use poles in that hand cannot be overcome by commercially available pole straps, the athlete will allocated LW8.

3.13 The Athlete must ski using two skis and one ski pole without the use of a prosthesis. The impairment shall be such that the athlete can only use one ski pole. Athletes in this class will be strictly forbidden to use affected arm to assist poling or paddling.

Sport Class LW9

3.14 Athletes eligible for class LW9 have a combination of impairments in both the upper and lower extremities, meeting any of the following minimum disability criterion:

- the athlete has an impairment in one lower limb AND one upper limb, each meeting the inclusion criteria for LW4 or LW8 respectively
- Hypertonia in both upper and lower limbs, resulting in grade 2 or more on the Ashworth Scale in any direction of movement
- Ataxia in both upper and lower limbs observed during at least one of the following tests of voluntary movement:
  - Finger-to-nose test (athlete touching own nose from the crucifix position)
  - Finger-to-finger test (classifier presents their index finger and asks the athlete to touch it with their own index finger)
  - Toe-to-finger test (classifier presents their index finger and asks the athlete to touch it with their toe)
  - Heel draw test (i.e., draw the heel of one leg along the length of the contralateral shin, from ankle to knee and then in the reverse direction);
  - Straight line heel-to-toe walking;
  - Walking
- Clearly evident athetosis in both upper and lower limbs is unwanted movement and posturing that is characteristically athetoid and is observable as at least one of the following:
  - Involuntary movement of the fingers or upper extremities despite the person trying to remain still
  - Involuntary movement of the toes or lower extremities despite the person

trying to remain still.

- Inability to hold the body still – swaying of the body. Swaying should not be due to other neurological deficits such as vestibular or proprioceptive impairments and therefore should not be exacerbated by closing of the eyes;
- Characteristic athetoid posturing

3.15 The Athlete must ski using two skis and either one ski pole or two ski poles.

Criteria for the Sitting Sport Classes LW10-12

3.16 Athletes competing in sitting classes LW 10 -12 will need to meet at least the criteria of LW4.

3.17 The athlete choses between sitting or standing at the time of their first classification by an accredited IPC Nordic Skiing Classification Panel at an event officially approved by IPC Nordic Skiing.

3.18 An athlete may request one review of the choice to compete sitting or standing prior to the start of the second season after the initial classification took place. The application must be submitted to IPC Nordic Skiing at the moment of renewal of the annual license.

3.19 An athlete may also request review of the choice if there is a clear medical justification for changing in which case an application for medical review is completed.

3.20 The Athlete will not be permitted to have his lower limbs outside of the sit-ski at any time during the competition.

3.21 During classification, no single criteria in isolation determines the sport class. The Classification Panel will consider the criteria and impairment in aggregate to determine the Sport Class for each athlete.

Sport Class LW 10

3.22 Athletes eligible for class LW10 are those with impairments in the lower limbs and the trunk who will have:

- A max score of 2 for each of the upper and lower abdominal muscles in any direction, and for (distal) trunk extensors, so that the athlete is unable to maintain a sitting position against gravity while properly strapped over the legs to the test table and without arm support
- A test-table-test score of 0-2
- A buttock sensibility score of 0 in S3-S5

Sport Class LW 10.5

3.23 Athletes eligible for class LW10.5 are those with impairments in the lower limbs and the trunk who will have:

- Upper abdominal and trunk extensor muscle activity score 3; and score 2 or less for abdominal muscles connecting to the pelvic structure. The athlete will sit statically without arm support when sitting with proper strapping over the legs to the test table and will not be able to move beyond base of support
- A test-table-test score of 3-6
- A buttock sensibility score of 0 in S3-S5

Sport Class LW 11

3.24 Athletes eligible for class LW11 are those with impairments in the lower limbs and the trunk who will have:

- Retained the use of abdominal muscles and trunk extensor muscles, especially those muscle attaching to the pelvis (scores 3 or more)
- Hip flexion score of 2 or less in both hips
- A test-table-test score of 7-10
- A buttock sensibility score of 0-2 in S3-S5
- The athlete will be unable to stand and/or walk even with orthosis;
- The athlete will be able to sit unsupported (with or without strapping) on the test table and move trunk out of base of support and return unaided while maintaining sitting position.

Sport Class LW 11.5

3.25 Athletes eligible for class LW11.5 are those with impairments in the lower limb(s) and the trunk who have:

- Near to normal trunk muscles activation (score 3-4 on abdominal muscles and trunk extensors)
- Hip flexion score of 3 or more in one hip and hip extension grade 1 or more in one or both hips (The athlete may be able to stand or walk with or without aid of orthosis.)
- A test-table-test score of 11
- A buttock sensibility score of 0-2 in S3-S5

Sport Class LW 12

3.26 Athletes eligible for class LW12 are those with impairments in the lower limb(s):

- With normal trunk function (score 4-5 on abdominal muscles and trunk extensors),

- Score 3-5 for hip flexion and extension (unilateral or bilateral);
- A test-table-test score of 12
- A buttock sensibility score of 0-2 in S3-S5

Appendix Two: Eligibility Criteria and Sport Classes for Athletes with Visual Impairment

1 Introduction

1.1 IPC Nordic Skiing has designated Sport Classes for Athletes with Visual Impairment, which are defined in this Appendix.

1.2 IPC Nordic Skiing is currently revisiting the Sport Classes for Athletes with Visual Impairment and is aiming towards sport-specific classification systems on the basis of activity limitations that result from Impairment. Until such a system is approved, the processes detailed in this Appendix apply to Athlete Evaluation in respect of Sport Classes for Athletes with Visual Impairment.

1.3 The processes detailed in this Appendix apply to Athlete Evaluation in respect of Sport Classes for Athletes with Visual Impairment.

1.4 The Sport Class allocated to Athletes with Visual Impairment applies to all Events offered by IPC Nordic Skiing.

1.5 All provisions of the IPC Nordic Skiing Classification Rules apply to the assessment of Athletes with Visual Impairment, except if otherwise specified in this Appendix.

2 Eligibility Criteria

2.1 To be eligible to compete in Sport Classes B1-B3 in IPC Nordic Skiing, the Athlete must meet <u>both</u> of the criteria below:

2.1.1 The Athlete must have at least one of the following Impairments:

- impairment of the eye structure;
- impairment of the optical nerve/optic pathways;
- impairment of the visual cortex.

2.1.2 The Athlete's Visual Impairment must result in a visual acuity of less than or equal to LogMAR 1.0 or a visual field restricted to less than 20 degrees radius.

2.2 It is the Athlete's and NPC's responsibility to provide sufficient evidence of the Athlete's visual impairment. This must be done by way of submitting medical diagnostic information completed by an ophthalmologist no later than at the beginning of Athlete Evaluation.

2.3 The medical diagnostic information must comprise the completed Medical Diagnostics Form (available on the IPC Nordic Skiing website) and additional medical documentation as indicated on the Medical Diagnostics Form. Failure to present with complete medical diagnostic information might lead to Athlete

Evaluation being suspended in accordance with Article 4.7 of these Rules.

2.4 Medical Diagnostic Information must be typewritten and submitted in English and may not be older than 12 months prior to the date of Athlete Evaluation.

3 Assessment Methods

3.1 All Athlete Evaluation and Sport Class allocation will be based on the assessment of visual acuity in the eye with better visual acuity when wearing the best optical correction.

3.2 Depending on an Athlete's visual acuity, visual acuity is tested using the LogMAR chart for distance visual acuity testing with Illiterate "E" and/or the Berkeley Rudimentary Vision Test.

3.3 Athletes who compete using any corrective devices (e.g. glasses, lenses) must attend classification with these devices and their prescription.

3.4 An Athlete found to be using corrective devices during competition that were not declared during Athlete Evaluation may be subject to further investigation of Intentional Misrepresentation (see Article Nine).

3.5 Athletes must declare any change in their optical correction to IPC Nordic Skiing before any competition. If the Athlete has a Sport Class Status Review with Fixed Review Date or Confirmed, the Athlete's Sport Class Status will be changed to Review. The Athlete will then undergo Athlete Evaluation prior to the next competition under the provisions of these Rules. Failure to do so may result in an investigation of Intentional Misrepresentation (see Article Nine).

3.6 Any Athlete Support Personnel accompanying the Athlete in the Assessment room must remain out of sight of the visual acuity charts during Assessment.

3.7 Under the current provisions set forth in this Appendix, Observation Assessment does not apply to Athletes with Visual Impairment.

3.8 IPC Nordic Skiing will inform the Local Organizing Committee of the equipment and room requirements for the assessment of Athletes with visual impairment after the Classification Panels have been appointed. It is the Local Organizing Committee's responsibility to provide all equipment required by IPC Nordic Skiing.

3.9 Failure to provide all equipment required by IPC Nordic Skiing may result in the Classification decisions not being accepted by IPC Nordic Skiing.

4 Sport Classes Profiles for Athletes with Visual Impairment

4.1 Sport Class B1

4.1.1 Visual acuity is poorer than LogMAR 2.60.

4.1.2 All Athletes (with the exception of those with prosthesis in both eyes) shall be required to wear opaque goggles for each individual and relay event for the full duration of the event. Athletes whose facial structure will not support goggles shall be required to cover the eyes with an opaque covering.

4.2 Sport Class B2

4.2.1 Visual acuity ranges from LogMAR 1.50 to 2.60 (inclusive), and/or

4.2.2 the visual field is constricted to a radius of less than 5 degrees.

4.3 Sport Class B3

4.3.1 Visual acuity ranges from LogMAR 1.40 to 1 (inclusive), and/or

4.3.2 the visual field is constricted to a radius of less than 20 degrees.

International Paralympic Committee

Adenauerallee 212-214
53113 Bonn, Germany

Tel. +49 228 2097-200
Fax +49 228 2097-209

ipcnordicskiing@paralympic.org
www.ipc-nordicskiing.org

© 2015 International Paralympic Committee – ALL RIGHTS RESERVED
Photo ©: Getty Images

IPC ICE SLEDGE HOCKEY

International
Paralympic Committee

Ice Sledge Hockey Regulations 2016-2017

December 2016

IPC ICE SLEDGE HOCKEY

IPC Ice Sledge Hockey Regulations

2016 - 2017

December 2016

International Paralympic Committee

Adenauerallee 212-214 Tel. +49 228 2097-200
53113 Bonn, Germany Fax +49 228 2097-209

www.ipc-icesledgehockey.org
ipcicesledgehockey@paralympic.org

IPC ICE SLEDGE HOCKEY

Contents

Definitions and abbreviations **6**

Chapter one: Administrative regulations **8**

1 Application **8**

2 Player eligibility **8**

2.1 General 8

2.2 Gender 8

2.3 Classification 9

3 Competition Structure **9**

3.1 Categories of Recognised Competitions 9

3.2 Recognised Competitions 9

3.3 Hosting a Recognised Competition 9

3.4 Development Level Competitions 10

3.5 Games with non-member teams 10

3.6 Official game sheets 10

3.7 Protection of IPC ISH competitions 10

3.8 Description of selected teams 11

3.9 Names of international competitions and cups 11

3.10 Default 11

3.11 Disqualification 11

3.12 Allocation of IPC World Championships 12

3.13 Responsibilities of participating NPCs 13

4 Financial regulations **13**

4.1 Revenues 13

4.2 Expenses 13

5 IPC Ice Sledge Hockey membership **14**

5.1 Participation of national teams of NPCs into Recognised Competitions 14

5.2 Allocation of national teams of new NPCs into the IPC ISH Competitions 14

6 Discipline 14
6.1 Standard of conduct 14
6.2 Competition disciplinary panel 14
6.3 STC 16
7 Anti-doping, equipment and medical 17
7.1 Anti-doping 17
7.2 Equipment 17
7.3 Medical services 17
Chapter two: Sport regulations 20
8 Administrative sport regulations 20
8.1 International playing rules 20
8.2 Three-point system 20
8.3 Tie-breaking system 20
8.4 Officiating system 21
8.5 Forfeits 21
8.6 Schedule of games 21
8.7 Schedule of practices 22
8.8 Uniforms and numbers 22
8.9 Dressing rooms 23
8.10 Awarding medals 23
9 Directorate and technical officials 24
9.1 Composition of the Directorate 24
9.2 Responsibilities of the Directorate 24
9.3 Player and team officials control by directorate 24
9.4 Responsibilities of the Technical Delegate 25
9.5 Responsibilities of the Referee Supervisor 27
10 Game protocols and procedures 27
10.1 Team entry and departure from ice surface protocol 27

10.2 Pre-game warm up following an extended game protocol 28
10.3 Game-ending protocol 29
10.4 Overtime procedures 29
10.5 Commercial break procedure 29
10.6 Jumbo screen usage policy 31
10.7 Scoreboard 32
10.8 Game countdown 33
10.9 Intermission countdown 34
10.10 Overtime intermission countdown 34
11 Officials 34
11.1 Licensing international referees and linesmen 34
11.2 Nomination of referees and linesman for Recognised Competitions 35
11.3 Referee duties 35
11.4 Linesman duties 36
11.5 Incapacitated referee or linesman 37
11.6 General duties 37
11.7 Uniform for referees and linesmen 37
11.8 Appointment and duties of off-ice officials 38
11.9 Goal Judges 38
11.10 Scorekeeper 38
11.11 Timekeeper 39
11.12 Public Announcer 40
11.13 Penalty Bench Attendant 40
11.14 Video Goal Judge 41
11.15 Remuneration for appointed officials 42
Chapter three: Competition calendar 42
12 Regional and World Championships 43
12.1 Year 1 43

12.2 Year 2 43
12.3 Year 3 44
12.4 Year 4 44
13 Paralympic Winter Games 44
13.1 Qualification and seeding 44
13.2 Paralympic Winter Games Qualification Tournament 45
14 World Championship seeding 46
14.1 A-Pool 46
14.2 B-Pool 46
14.3 C-Pool 47
14.4 ISH World Ranking 47
Chapter four: Rules and regulations review 47
15 General 47
15.1 Year 1 47
15.2 Year 2 48
15.3 Year 3 48
15.4 Year 4 48

Definitions and abbreviations

Assistant TD – Assistant Technical Delegate, appointed by IPC ISH who assists the TD in carrying out his/her responsibilities.

Chair of the Directorate – as defined in Section 9.

Combined National Teams – as defined in Section 14.3.3.

Directorate – The body established at each Recognised Competition to have ultimate control of all sporting matters.

Game Supervisor – as defined in IPC ISH Game Officials' Handbook.

IIHF – International Ice Hockey Federation.

ISH World Ranking – as defined in Section 14.4.

IPC – The International Paralympic Committee, the global governing body of the Paralympic Movement.

IPC GB – The IPC Governing Board, the representative of the IPC Membership, elected at the General Assembly in accordance with nomination and election procedures adopted by the IPC Membership at the 2004 Extraordinary General Assembly. The IPC GB is responsible for overseeing the affairs of the IPC in between meetings of the General Assembly.

IPC ISH – IPC Ice Sledge Hockey

IPC ISH Competition – as defined in Section 3.1.

IPC ISH Rulebook – the International Paralympic Committee Ice Sledge Hockey Rules, as published and updated from time to time.

IPC Handbook - http://www.paralympic.org/the-ipc/handbook.

IPC Management Team – the team responsible for representing the IPC GB and the IPC ISH in managing the business affairs of the IPC ISH and in all proceedings and negotiations of all types against courts and authorities.

IPC World Championships – ice sledge hockey World Championships A-Pool, B-Pool, C-Pool.

Licence Fee – as defined in Section 4.1.1.

LOC – Local Organising Committee, a committee that is endorsed by the host NPC to organise a Recognised Competition.

NF – National Federation (or National Association), an organisation that is recognised or authorised by the respective territory's NPC as the sole governing body for the sport of ice sledge hockey in that territory.

NPC – National Paralympic Committee, a national organisation recognised by the IPC as the sole representative of athletes with an impairment in that country or territory to the IPC.

Recognised Competition – as defined in Section 3.1.

Referee Supervisor – as defined in IPC ISH Game Officials' Handbook.

Regulations - these International Paralympic Committee Ice Sledge Hockey Regulations, as published and updated every season.

Scorekeeper – as defined in IPC ISH Game Officials' Handbook.

STC – The International Paralympic Committee Ice Sledge Hockey Sport Technical Committee, the IPC committee responsible for delivering specified sport technical activities and services in accordance with the IPC regulations, and providing advice to the IPC Management Team on all IPC Ice Sledge Hockey sport technical matters.

TD – Technical Delegate, appointed by IPC ISH with responsibilities as defined in Section 9.4.

Technical Officials – the officials appointed by IPC ISH.

Chapter one: Administrative regulations

1 Application

These Regulations apply to all IPC ISH bodies and committees, to all member NPCs, their constituent bodies, clubs, teams, players, officials, members and any person or body whatsoever and howsoever associated as regards Recognised Competitions and/or international games or competitions.

2 Player eligibility

2.1 General

Players must meet the following criteria in order to be permitted to participate in Recognised Competitions:

2.1.1 the player must hold a valid IPC Ice Sledge Hockey Licence;

2.1.2 the player must be a national of the country that his or her NPC represents in accordance with the provisions of the IPC Athlete Nationality Policy (IPC Handbook Section 2, Chapter 3.1); and

2.1.3 the player must have been at least 16 years of age on 1 January of the year during which the Recognised Competition takes place.

2.2 Gender

2.2.1 An athlete shall be eligible to compete as a male in Recognised Competitions if he is:

(a) recognised as a male in law and in accordance with the international standards applicable at the time; and

(b) eligible to compete under the IPC ISH Rule Book, these Regulations and the IPC Ice Sledge Hockey Classification Rules and Regulations.

2.2.2 An athlete shall be eligible to compete as a female in Recognised Competitions if she is:

(a) recognised as a female in law and in accordance with the international standards applicable at the time; and

(b) eligible to compete under the IPC ISH Rule Book, these Regulations and the IPC Ice Sledge Hockey Classification Rules and Regulations.

2.2.3 The IPC Medical and Scientific Director, in accordance with the international standards applicable at the time, shall determine:

(a) the eligibility of a female with hyperandrogenism to compete as a female in Recognised Competitions; and

(b) the eligibility of a person recognised as third gender in law.

2.2.4 Any athlete who, in the opinion of the IPC Medical and Scientific Director, fails to comply with the applicable international standards shall not be eligible to compete.

2.3 Classification

Players must comply with and must be assigned a Sport Class and Sport Class Status in accordance with the IPC Ice Sledge Hockey Classification Rules and Regulations. For IPC ISH Competitions and IPC ISH Sanctioned Competitions, all players must be classified with Sport Class Status 'Review' with fixed review date after the relevant competition or 'Confirmed'.

3 Competition Structure

3.1 Categories of Recognised Competitions

The following competitions are recognised by IPC ISH as Recognised Competitions:

3.1.1 "**IPC ISH Competitions**": the Paralympic Winter Games, World Championships, and Regional Championships;

3.1.2 "**Sanctioned Competitions**": ISH competitions held as Paralympic Games Qualification Tournaments; and

3.1.3 "**Approved Competitions**": International or National ISH competitions endorsed by a NPC.

3.2 Recognised Competitions

All Recognised Competitions must:

3.2.1 consist of ice sledge hockey matches played between teams that represent NPCs or are approved by IPC ;

3.2.2 use the current version of the IPC ISH Rulebook which applies to all such competitions (a violation of this rule will be subject to possible disciplinary action); and

3.2.3 be approved by the NPC where the competition is to be held.

3.3 Hosting a Recognised Competition

LOCs wishing to hold a Recognised Competition must:

3.3.1 submit a written application on the IPC Ice Sledge Hockey Approved Competition Form or follow the bid process defined by the IPC;

3.3.2 pay the sanction fee set by the IPC and published on the IPC ISH website;

3.3.3 agree to abide by all IPC Ice Sledge Hockey Rules and Regulations in the conduct of their event;

3.3.4 submit a copy of the full and complete rules; regulations and procedures of the game(s) or tournament proposal (other than the IPC ISH Rulebook and these Regulations).

Where there is a desire to use exceptions to the IPC Ice Sledge Hockey Rules and Regulations, such exceptions must be approved in advance by the STC and the host NPC or NF;

3.3.5 ensure that, all players, coaches, teams and on-ice officials are properly registered with their NPC or National Federation;

3.3.6 ensure that only IPC ISH/IIHF registered officials officiate at games or tournament games, unless specifically approved otherwise by the STC; and

3.3.7 if necessary, obtain permission from IPC ISH for the use of a tournament "title" that would imply that there is a "World" or "International" championship involved.

3.3.8 Violation of any of the above rules or procedures will be considered grounds for possible disciplinary action from the IPC of the individuals; teams or governing bodies responsible for such violations.

3.4 Development Level Competitions

3.4.1 IPC ISH may organise Development Level Competitions. Development Level Competitions refers to IPC ISH Approved Competitions, which are created for the purposes of developing the sport of IPC ISH and encouraging participation of youth and female players.

3.4.2 The STC may, in consultation with IPC ISH, alter the player eligibility requirements and playing rules for Development Level Competitions.

3.5 Games with non-member teams

Ice sledge hockey games involving non-registered teams require the approval of both the NPC where the games will be played and the STC.

3.6 Official game sheets

3.6.1 **General:** Official game sheets and referee reports of Recognised Competitions must be delivered to the IPC, the LOC and the competing NPCs within 14 calendar days of the end of the competition in question.

3.6.2 **Match or Game Misconduct Penalties:** Official game sheets and referee reports of Recognised Competitions where a match penalty or game misconduct penalty was imposed must be sent to the NPC of the penalised player; the national team head coach and team official, the IPC and the STC within 14 calendar days of the end of the competition in question.

3.7 Protection of IPC ISH competitions

No other high profile games may be played in the organising country during an IPC ISH Competition unless otherwise approved by the STC.

3.8 Description of selected teams

3.8.1 **IPC Descriptions:** The name "international" team, "IPC" team or "continental" team (e.g. “European” team) or any like description is the exclusive right of the IPC. No NPC or club of such association is permitted to have a team play under these names.

3.8.2 **NPC Descriptions:** The descriptions "national" team, "national junior" team, "national select" team or any like description are the exclusive right of the member NPC.

3.8.3 **STC Descriptions:** The description "International All Star" team or a description exceeding the territory of a NPC can only be used with the prior authorisation of the STC.

3.9 Names of international competitions and cups

Competitions and cups with names of geographical areas exceeding the territory of a NPC (such as World Cup, European Cup, World Tournament, Continental Tournament, etc.) can be only used with the previous authorisation of the IPC.

3.10 Default

Any international game agreed in writing between member NPCs or their clubs where either the organiser or one of the participants has failed to fulfil their obligations will render the defaulter liable to disciplinary action by the IPC.

3.11 Disqualification

3.11.1 **Player:** A player may be disqualified (“DSQ”) from the tournament as a result of unsportsmanlike behaviour or breach of the IPC ISH Rulebook or these Regulations . The disqualification decision will be made in accordance with Section 6 or 7 of these Regulations.

3.11.2 **Team:** When three or more players in a team are disqualified from a tournament, the team is disqualified from the tournament. The required actions that must be taken when a team is disqualified vary greatly depending on the point in time the DSQ takes place during the tournament. The DSQ team will show up in the final standings at the bottom with no rank but with a DSQ indicator and with no results.

3.11.3 **Team Disqualification Procedures:** A team disqualification shall be dealt with based on the time at which the third player DSQ occurs:

3.11.3.1 If a team is disqualified during the preliminary round before any subsequent game has commenced:

(a) All games involving the DSQed team that have already been played will be considered lost (by forfeit).

(b) All statistics and results from these games will be managed according to the forfeit regulation as outlined in Section 8.5.

3.11.3.2 If a team is disqualified after the start of the first qualification play-off game and before the first semi-final game:

(a) All results and statistics from the previous phases are maintained.

(b) The opponent wins by forfeit.

(c) The other loser in the qualification play-off games will be ranked 7th in the final standings.

3.11.3.3 If a team is disqualified during the semi-finals and before the bronze medal game:

(a) All results and statistics from the previous phases are maintained.

(b) The opponent wins by forfeit.

(c) The loser of the other semi-final game is declared the bronze medal winner.

(d) All other teams move up one rank in the final standings.

3.11.3.4 If a team playing in the bronze medal game is disqualified (before or after the game is played):

(a) All results and statistics from the previous phases are maintained.

(b) The opponent wins by forfeit.

(c) All other teams move up one rank in the final standings.

3.11.3.5 If a team playing in the gold medal game is disqualified before the game is played or after the game is played:

(a) All results and statistics from the previous phases are maintained.

(b) If the disqualification occurs before the game is played, the winner of the bronze medal game plays in the gold medal game, if at all possible. If it is not possible to play a new game, the opponent automatically wins the gold medal and the winner of the bronze medal wins the silver and the loser of the bronze medal game is awarded the bronze medal.

(c) If the disqualification occurs after the game, the opponent wins the gold medal by forfeit, the winner of the bronze medal game wins the silver and the loser of the bronze medal game wins the bronze medal.

(d) All other teams move up one rank in the final standings.

3.12 Allocation of IPC World Championships

The allocation of IPC World Championships is governed by the IPC in accordance with the following regulations:

3.12.1 **Dates:** The IPC World Championships will be played in March, April or May or as otherwise determined by the IPC.

3.12.2 **Repeat Hosting:** A NPC will not be eligible to host an IPC World Championship in the same Pool for two consecutive years unless there is no other applicant.

3.12.3 If there are six or more teams in the event, the organiser must have two ice arenas (depending on the playing system and the required ice time for games and practices) both of which comply with the technical requirements provided by the IPC. An IPC World Championships may not be played in more than two ice arenas or in cities that are 50km apart. Exceptions may be permitted by the STC in its sole discretion.

3.12.4 The allocation of any IPC Word Championship is final only when the IPC and the NPC/organiser have signed an official host contract.

3.13 Responsibilities of participating NPCs

3.13.1 **Team entry forms:** NPCs entering a team in any Recognised Competition must submit the team entry form according to the requirements and timelines set by the IPC or the event organisers.

3.13.2 **STC Approval:** At all IPC ISH Competitions and IPC ISH Sanctioned Competitions, participation of all teams is subject to the approval of the STC.

3.13.3 **Payment of Fees:** Any member NPC that has not paid its dues or any fines to the IPC will not be permitted to enter a team.

4 Financial regulations

4.1 Revenues

The revenues of IPC Ice Sledge Hockey may consist of:

4.1.1 **Licence Fees:** Annual national team licence fee for the NPCs (for up to 15 players or 16 if at least one female player is included in the roster) due by August 31st of each financial year. The amount of the licence fee will be set by the STC each year. An additional fee will also be set for any extra players that an NPC wishes to register in excess of the roster numbers referred to above.

4.1.2 **Event Sanctioning Fees:** IPC event sanctioning fees established by the IPC.

4.1.3 **Event Revenues:** Host contract revenues.

4.1.4 **Other:** Other revenues as may be identified by IPC ISH.

4.2 Expenses

The IPC will cover the reasonable expenses, as approved by the IPC, for all persons appointed to the STC or the IPC Management Team when performing their authorised duties according to IPC policies.

5 IPC Ice Sledge Hockey membership

5.1 Participation of national teams of NPCs into Recognised Competitions

NPCs are required to be members in good standing with the IPC and pay the required IPC Ice Sledge Hockey annual team licence fee (as set out in Section 4.1) in order to be eligible to compete in Recognised Competitions.

5.2 Allocation of national teams of new NPCs into the IPC ISH Competitions

National teams of NPCs newly practicing IPC Ice Sledge Hockey will start their participation in IPC ISH Competitions in the C-Pool or qualification pool of the various competitions, subject to their good standing with the IPC.

6 Discipline

6.1 Standard of conduct

All participants are expected to conduct themselves in a professional and non-disruptive manner. Any participant shall have violated these Regulations and shall be subject to discipline by IPC ISH if he or she:

6.1.1 verbally or physically threatens another person;
6.1.2 abuses the rights and privileges afforded to competition participants;
6.1.3 engages in unsportsmanlike conduct;
6.1.4 creates a condition or circumstance that is unsafe, unfair, or out of order; or
6.1.5 otherwise engages, in the opinion of IPC ISH, in conduct detrimental to the sport of ice sledge hockey and/or IPC ISH.

6.2 Competition disciplinary panel

6.2.1 Powers and jurisdiction

The Competition Disciplinary Panel (the "Panel") will be responsible for making any decision in respect of reported disciplinary infringements during the period of any Recognised Competition. Decisions of the Panel are final and cannot be appealed. The Panel will exercise this power exclusively in accordance with the following provisions.

6.2.2 Composition

(a) At each Recognised Competition, the Chair of the Directorate will appoint a Panel, which will consist of three or five members, one of whom will be the Panel Chair. Those appointed should be familiar with the sport of ice sledge hockey, the IPC ISH Rulebook and these Regulations and must be approved by the Directorate.

(b) If fewer than three members of the Panel are able to participate, the Chair of the Directorate will appoint replacements.

(c) Decisions will be made by majority vote.

6.2.3 Non-Field-of-Play Violation Procedures

(a) Any reported disciplinary infringements during the period of the Recognised Competition outside the field of play shall be investigated and dealt with under this Section.

(b) A request for disciplinary action can be made by a NPC/NF or LOC

(c) After reviewing a request for disciplinary action and any supporting evidence, and on being reasonably satisfied that there is a genuine case to answer, the Panel Chair will notify the general manager of the team(s) involved of the alleged violation and of the time and the place of the oral hearing to be held. This will be deemed as good notice to those accused of any misconduct. The Respondent(s) (being the player or team official alleged to have committed some act of misconduct, or some omission that in effect amounts to an act of misconduct) and/or the general manager of the relevant team may submit documentary evidence (including statements, videos, etc.) to the Panel Chair prior to the hearing.

(d) The Panel will endeavour to hold the hearing as soon as possible and will aim to do so prior to the next game of the team or teams involved. The Respondent(s) and/or a representative of the team concerned may attend the hearing and present arguments and relevant evidence, in the discretion of the Panel. The hearing will be held in private but the decision in relation to any sanction (and the reasons therefore) will be made public.

6.2.4 Field-of-Play Violation Procedures

(a) Any reported disciplinary infringements on the field of play occurring during the course of a Recognised Competition shall be dealt with under this Section.

(b) The Panel may be convened by the Panel Chair on his or her own initiative, at the request of the Directorate Chair, or at the request of a team in accordance with this Section.

(c) A participating team may submit up to one written request per game for the Panel to investigate a single incident which it feels should result in disciplinary action. The request must: (i) be made in writing within 90 minutes of the end of the game; and (ii) specify the rule or rules violated, the player(s) involved, and the time at which the incident occurred.

(d) The Panel will only consult the official video (where available) in making its decision. Where official video is not available, the Panel may request and review personal or team videos.

(e) The review should be held and decisions made within 24 hours of the end of the game at which the complaint arose and keeping in mind the timing of the affected teams' next game or games. Teams affected should be notified of the decision orally and in writing as soon as possible after a decision has been made.

6.2.5 Sanctions

Sanctions for both field of play and off-field of play may include any one or more of the following:

(a) **Caution:** in cases of minor infringement, particularly first offenses, the Panel may issue a caution.

(b) **Suspension:** the Panel may suspend a player, team official or team for any number of games but for no more than to the end of the Recognised Competition.

(c) **Disqualification:** the Panel may disqualify a player, team official or team for the remainder of the Recognised Competition. Only disqualifications will invoke the provisions in Section 3.11.

(d) **Referral:** for serious violations where the Panel believes a more severe sanction is warranted or where the violation occurred on the last day of the Recognised Competition, the Panel may refer the matter to the STC for further proceedings in accordance with Section 6.3.

6.3 STC

6.3.1 Powers and jurisdiction

The STC may take disciplinary action for any behaviour in or out of competition whether referred by a Panel or not. The STC may choose to pass any issue over to the IPC Legal and Ethics Committee if there has been a suspected breach of the IPC Code of Ethics.

6.3.2 Procedures and sanctions

If the STC takes disciplinary action it will do so under the advice of the IPC Legal Counsel and in accordance with the principles of natural justice..

7 Anti-doping, equipment and medical

7.1 Anti-doping

All IPC Ice Sledge Hockey competitors, officials, entourage, etc. are subject to the provisions of the IPC Anti-Doping Code. The IPC Anti-Doping Code can be found in the IPC Handbook Section 2, Chapter 1.2: http://www.paralympic.org/the-ipc/handbook.

7.2 Equipment

7.2.1 **Principles:** The IPC Equipment Policy (IPC Handbook, Section 2, Chapter 3.10) applies to all Recognised Competitions. The fundamental principles that the IPC is promoting regarding the use of equipment during Recognised Competitions are:

(a) **Safety:** for the user, players officials, spectators, and the environment;
(b) **Fairness:** a player should not receive an unfair advantage that is not within the spirit of the sport;
(c) **Universality:** equipment should be reasonably commercially available to all;
(d) **Physical prowess:** human performance should be the critical endeavour, not the impact of technology and equipment.

7.2.2 **Inspection:** All equipment used in Recognised Competitions shall be in conformity with the IPC Policy on Sport Equipment (IPC Handbook Section 2, Chapter 3.10) and the IPC ISH Rulebook. All equipment shall be approved by the TD prior to each Recognised Competition. Equipment must not be altered after it has been approved and marked by the TD at the equipment inspection and uninspected equipment must not be used.

7.3 Medical services

7.3.1 **Medical Code:** The IPC Medical Code (IPC Handbook, Section 2, Chapter 1.4) applies to all Recognised Competitions. The IPC has appointed the IPC Medical Committee under the Guidelines of the IPC Handbook to provide IPC Ice Sledge Hockey with general advice on medical matters.

7.3.5 **Responsibilities**

(a) In accordance with the IPC Medical Code, players are responsible for their own physical and mental health and for their own medical supervision.
(b) By participating in a Recognised Competition, all participants specifically release IPC and IPC ISH from any liability to the extent permitted by law for any loss, injury or damage that he or she may suffer in relation to or as a result of his or her participation in the Recognised Competition.

(c) Notwithstanding the provisions of 7.3.5 (b), NPCs shall use best efforts to ensure that all players under their jurisdiction competing in Recognised Competitions are in a state of physical and mental health that is compatible with elite level competition in ice sledge hockey.

(d) Every NPC shall use best efforts to ensure that appropriate and continuous medical monitoring of its players is undertaken. It is further recommended that NPCs organise, for a period, health evaluation of each player that it enters competitions.

(e) NPCs are responsible to ensure suitable medical provision and medical insurance coverage for their delegation during travel to and from Recognised Competitions.

(f) It shall be the responsibility of the LOC in each case to ensure that suitable medical provision, medical services and medical insurance coverage are provided at all Recognised Competitions. The scope of medical services may vary according to the following factors: the size and nature of the Recognised Competition, the number of players participating, the number of support staff and spectators and the health standards of the country where the Recognised Competition takes place. The IPC Medical Committee shall issue and keep updated practical guidelines to assist local organising committees in providing adequate medical services and taking appropriate safety measures at international competitions (see "IPC ISH Event Medical Services Handbook").

(g) A Chief Medical Officer (CMO) shall be appointed by the local organising committee for each Recognised Competition to prepare and co-ordinate the medical services and safety requirements during the competition and liaise with the IPC Medical & Scientific Director if necessary.

7.3.6 **Medical Exclusions:** In exceptional circumstances, if a player has a medical condition that requires special treatment or poses special risk and cannot be reasonably managed by the LOC or IPC ISH, that condition may represent grounds for a refusal to accept the entry of that player. The IPC Medical & Scientific Director will make a final decision, in consultation with the IPC Medical Committee and sport-technical experts as identified by the STC. The affected player and his/her NPC must be given opportunity to provide evidence that the medical risks are manageable. In making the decision, the following factors should be weighed:

(a) the risk to the player's health, including both the likelihood of an incident and its potential severity;

(b) the risk to other players, team officials, and technical officials who will be on the ice or benches at the same time;

(c) the medical resources which will be available at the Recognised Competition and the practicality and cost of any additional measures necessary to protect the player;

(d) the extent of insurance coverage obtained by the player, the team, and the relevant NPC, and the LOC; and

(e) any evidence produced by the affected player and the NPC.

While awaiting any final decision of the IPC Medical & Scientific Director, the player will not be allowed to enter the Recognised Competition. The player and NPC are therefore required to bring possible exceptional circumstances to the attention of IPC ISH in a timely fashion.

Chapter two: Sport regulations

8 Administrative sport regulations

8.1 International playing rules

The official playing rules for all Recognised Competitions shall be established by the STC and approved by the IPC Governing Board and are contained within the IPC ISH Rulebook (as amended and published on the IPC ISH website from time to time). The STC shall be responsible for establishing guidelines by which the official playing rules shall be interpreted.

8.2 Three-point system

All teams that participate in a Recognised Competition are ranked in that competition according to the number of points awarded. For all Recognised Competitions, points shall be awarded per game as follows:

- Three points for the winning team at the conclusion of regulation time.
- **Regulation Draw:** One point for both teams at the conclusion of regulation time if the game is tied.
- **Overtime Win:** One additional point for the team winning the game in an overtime period, or the Game Winning Shots Procedure as defined in the IPC ISH Rulebook if the teams are still tied following the conclusion of the overtime period.
- **Regulation Loss:** Zero points for the team losing the game at the conclusion of regulation time.

8.3 Tie-breaking system

The tie breaking system for two teams with the same number of points in a standing will be the game between the two teams, the winner of the game taking precedence. Due to the fact that the three-point system does not allow a game to end in a tie, the following tie breaking procedure is applicable when three or more teams are tied in points in a championship standing. Should three or more teams be tied on points, then a tie breaking formula will be applied as follows, creating a sub-group among the tied teams. This process will continue until only two or none of the teams remain tied. In the case of two remaining tied teams, the game between the two would then be the determining tie-breaker as the game could not end in a tie. In the case of none of the teams being tied, the criterion specified in the respective step applies.

- **Step 1:** Taking into consideration the games between each of the tied teams, a sub-group is created applying the points awarded in the direct games amongst the tied teams from which the teams are then ranked accordingly.

- **Step 2:** Should three or more teams remain tied in points, then the better goal difference in the direct games amongst the tied teams will be decisive.
- **Step 3:** Should three or more teams remain tied in points and goal difference then the highest number of goals scored by these teams in their direct games will be decisive.
- **Step 4:** Should three or more teams remain tied in points, goal difference, and goals scored then the results between each of the three teams and the closest best-ranked team outside the subgroup will be applied. In this case the tied team with the best result (1. Points, 2. Goal difference, 3. Goals scored) against the closest best ranked team will take precedence.
- **Step 5:** Should three or more teams still remain tied, then the results between each of the three teams and the next highest best-ranked team outside the sub-group will be applied.
- **Step 6:** Should three or more teams still remain tied after these five steps have been exercised then the teams will be ranked by their positions coming into the competition (i.e. seeding).

8.4 Officiating system

The 'three-officials system', as defined in the IPC ISH Rulebook, will apply in all Recognised Competitions.

8.5 Forfeits

8.5.1 **General:** A game is forfeited when: a) a team does not appear for that game; b) a team does not resume playing after a game break; or c) a team stops playing a game before the completion of the game in contravention of the IPC ISH Rulebook.

8.5.2 **Score line:** When a game is declared a forfeit, the result will be recorded 0:5. Should the actual game result be better for the non-offending team than the forfeit, then such result remains valid. When both teams have caused a forfeit, a defeat with a result of 0 points and 0:0 goals will be recorded for each team.

8.5.3 **Games in progress:** When a team or teams cause a game in progress to be cancelled (a game is deemed to be in progress from the opening face-off until the final whistle), then, in addition, two points shall be deducted from the team or teams at fault. The case will be investigated by the STC for possible further disciplinary action.

8.6 Schedule of games

8.6.1 **Schedule:** The LOC must prepare the game schedules for its competition in accordance with these Regulations. The organisers will propose the dates, times and places of the games to the STC for approval.

8.6.2 **Home Teams:** The team with the higher seed will always be the home team. After the preliminary rounds, the home teams for each additional game will be determined based on results in the preliminary round. The home team will always be listed first.

8.6.3 **Reseeding of teams for playoffs and medal games:** For the purpose of the playoff round and medal games, teams will be reseeded after the preliminary round games have completed. The seeding numbers will be allotted by use of the following criteria in the order presented:

- Higher position in the group
- Higher number of points
- Better goal difference
- Higher number of goals scored "for"
- Better seeding entering the competition

8.6.4 **Time between games:** The difference between the starting times of two games by the same team shall be at least 20 hours for the Paralympic Winter Games and 17 hours for all other competitions, unless otherwise approved by the STC for extraordinary circumstances (e.g. host broadcast schedule). Generally, no team will be called upon to play on more than two consecutive days and more than one game a day, unless the tournament schedule otherwise demands.

8.7 Schedule of practices

8.7.1 **Practice duration:** On the day of the game the practice times will be scheduled for 50 minutes duration. On the day of rest the practice time will be scheduled for a minimum of 60 minutes duration.

8.7.2 **Practice times:** In principle, the teams that play earlier will also practice earlier with the necessary adaptation following the timing of games on the preceding day.

8.7.3 **Practice location:** Generally, a team's practices will take place in the same arena as that team's games. The home team shall practice second, but the teams may practice at the same time if another arena is available. If two opposing teams must practice at the same time in different arenas, then the team in the higher ranked position in the preceding round will have the choice of practice arena.

8.7.4 Practical switches or adjustment of practice times may be agreed between the relevant teams and the TD, subject to final approval of the Chair of the Directorate.

8.8 Uniforms and numbers

8.8.1 **Light and dark:** For all Recognised Competitions, each participating team must have two sets of sweaters and socks, one of light colour and one of dark colour. Both sets

must be approved by the STC. The basic colour must cover approximately 80% of each item. The home team will have the choice of jersey colour.

8.8.2 **Uniform advertising:** If the STC provides the teams with uniforms with advertising, the NF or NPC are obliged to play the respective competition with these uniforms. Uniform advertising will be allowed in accordance with the IPC Ice Sledge Hockey Uniform Advertising Guidelines.

8.8.3 **Player numbers:** Before each game, the manager or coach of each team shall provide the referee or Scorekeeper with a list of names and numbers of eligible players, including the names of the captain and alternate captains. All players shall have the same number on their respective dark and light jerseys.

8.8.4 **Replacement jerseys:** Each team will have available replacement jerseys (light and dark) in case a player's jersey becomes unwearable.

8.9 Dressing rooms

8.9.1 **Teams:** Each team shall be provided with a suitable room with sufficient space for 23 team officials and players and their equipment, equipped with benches, sanitary toilet and showers.

8.9.2 **Allotment:** Team dressing rooms shall be assigned by the TD or the Assistant TD using the following criteria: The dressing rooms will be ranked by quality and distance to the ice surface and allotted to the teams following their seeding numbers; never the less the host country team will have the first choice. The same principle will apply for the eventual game dressing rooms.

8.9.3 **Changing dressing rooms:** If the teams have to change the arenas after the preliminary or qualifying round of the competition, then the dressing room in the arena to where a team is moving will again be allotted following the team seeding number and the ranking numbers of the available (free) team dressing rooms. Teams already in the facility will not be expected nor permitted to move dressing rooms. The organiser of the Recognised Competition must work out an exact time schedule for such changes of dressing rooms in advance.

8.9.4 **Referees and linesmen:** A separate dressing room equipped with chairs or benches and a sanitary toilet and shower must be provided for the exclusive use of the referees and linesmen.

8.10 Awarding medals

At all Recognised Competitions (save for the Paralympic Winter Games) medals will be awarded to the registered squad of players and to up to six team officials. At the Paralympic Winter Games medals will be awarded to the registered squad of players only.

9 Directorate and technical officials

9.1 Composition of the Directorate

Every Recognised Competition is controlled by a Directorate which is composed at the respective Recognised Competition. Each voting member will have one vote. In the event of a tie, the Chair will cast the deciding vote. The members of the Directorate are as follows:

- Chair (voting), as nominated by the STC.
- One member of each participating member NPC (voting), nominated by the NPC (but may not be the team coach).
- One member on behalf of the LOC (voting).
- The TD or the Assistant TD (non-voting), nominated by the STC.
- Referee in chief (non-voting), nominated by the STC.

9.2 Responsibilities of the Directorate

Under the control of the Chair of the Directorate, the Directorate shall be responsible for:

- controlling the eligibility documents of the players;
- controlling the organiser's responsibilities;
- controlling the participating national association's responsibilities;
- approving the appointment of the Disciplinary Panel;
- awarding cups, medals, diplomas;
- confirming the nominations of best three players of each team;
- selecting the best goalkeeper, defenseman and forward of the competition; and
- authorising any other awards of the competition.

9.3 Player and team officials control by directorate

The Directorate shall have the right to control players and team officials in the following ways:

9.3.1 **General:** The Directorate shall control the players to ensure that all are registered and eligible to compete in Recognised Competitions in accordance with the IPC ISH Rulebook, and these Regulations. Control by the tournament Directorate does not constitute acknowledgment by the STC that the player is eligible to take part in the championship. Such control is limited to acknowledgment that the completed team entry form has been received and the details correspond with the player's passport.

9.3.2 **Forms:** Teams must submit completed team entry forms and team officials registration forms with applicable waivers, printed in block Latin letters, with correct family and given names and personal data, identical to those on the passport, signed by the player and the NF or NPC, together with the player's valid national passports

(confirming state citizenship by the Directorate member representing the team for the players control) on the eve of the competition, by midnight local time at the latest. The team entry forms and the applicable waivers in English, completed with the required signatures must be filed with the NF or NPC by the date specified by IPC ISH.

9.3.3 **Team size:** A member NPC can register a maximum of 15 players, plus 2 goalkeepers for all Recognised Competitions, unless their squad of players (including goalkeepers) includes at least one female, in which case the team may consists of a maximum of 16 players, plus 2 goalkeepers. A team must have a minimum of 7 players and 2 goalkeepers.

9.3.4 **Registration:** The Team Registration Form must name all the players who will play for the team during the tournament and be submitted at the first Directorate meeting at which time it will be final. A minimum of 7 players and 2 goalkeepers per team must be present at the competition venue by the time of the player's control at the first Directorate meeting. If this requirement is not fulfilled, the team will be disqualified. At the discretion of the Directorate Chair, players not present at the time of the first Directorate meeting but named on the Team Registration Form, may be controlled after the first Directorate meeting, but in no event later than two hours before the first game in which they will be permitted to play.

9.3.5 **Emergency goalkeeper:** Each participating NPC will have the right to register an emergency goalkeeper. If the respective Directorate member of the NPC, together with the team doctor, declare in writing that a registered goalkeeper is unfit to play, such goalkeeper may be replaced by the emergency goalkeeper who after being controlled, not less than two hours before the relevant game, becomes eligible to play when the unfit goalkeeper is deleted from the team list by the Directorate. The replaced goalkeeper shall not be permitted to play any further game in the competition.

9.3.6 **Team Officials:** A NPC shall be entitled to register up to 6 team officials for all Recognised Competitions. Additional team officials will not be allowed as a matter of course. If the facilities allow and if approved by the IPC ISH, a team may bring additional team officials but will be required to pay a correspondingly higher tournament fee reflecting the cost of additional team officials.

9.4 Responsibilities of the Technical Delegate

The TD will have the responsibilities described in this Section 9.4 in any Recognised Competition. An Assistant Technical Delegate may be appointed and will assist the TD in carrying out these responsibilities.

9.4.1 **Pre-game protocol:** Be available in case of any measures that need to be addressed such as pre-game warm-up delay. Ensure that the opening ceremonies are operated in accordance with these Regulations or an approved agreement.

9.4.2 **Game-time responsibilities:** Ensure that the teams are on the ice at the prescribed time and that the intermission is followed according to protocol. In a play-off game be aware of the Overtime and Game Winning Shots Regulations, as defined in IPC ISH Rulebook.

9.4.3 **Post-game responsibilities:** Ensure that the closing ceremonies are operated according to the Protocol Guide for IPC Sports Championships including the national anthem of the winning team (helmets off), and that teams shake hands with opponents & game officials.

9.4.4 **Problem solving:** Be available to answer any questions before and after games (benches, sweater colours, pre-game warm-up procedures) and to co-operate with the referee supervisor to solve problems concerning rules or rule interpretations.

9.4.5 **Risk management and safety:** Make an inspection tour through the venue and take note of any items which are considered to be potential problem areas. Report any safety procedure violations by players or officials and ensure that the playing surface and the spectator areas are safe for each game. Report any on ice safety issues to the Directorate and provide recommendations where necessary.

9.4.6 **Discipline:** Report any discipline or conduct problems that occur during games to the Disciplinary Panel Chair and the Directorate. If there is a suspension(s), be prepared to give an overview of the incident.

9.4.7 **Referee game report:** Ensure that the Referee Supervisor following the game immediately submits the referee game report to the Chair of the Directorate. Obtain this document from the Referee Supervisor and be aware of the contents. Be prepared to give a professional opinion of the incident or incidents involved.

9.4.8 **Referee Supervisor:** Have an understanding and knowledge of the Referee Supervisor's role and duties. Be aware of the Referee Supervisor's location during a game.

9.4.9 **Game summary report:** Provide a game summary report (including the final score and any misconduct penalties) at the next Directorate Meeting including but not limited to the issues and items listed above.

9.4.10 **Equipment measurement:** Perform equipment measurements and tag each piece of equipment with an IPC label or equivalent, in a visible location, to identify the equipment as an approved piece of equipment according to the IPC ISH Rulebook. This duty may be performed by an authorised representative of the TD.

9.5 Responsibilities of the Referee Supervisor

9.5.1 **Game officials:** Meet with game officials before and after a game to help prepare them and provide feedback and evaluation after the game. Assist in communication between the game officials and tournament or technical officials, if necessary.

9.5.2 **Referee game reports:** Immediately submit any the referee game report to the Chair of the Directorate. Be prepared to give a professional opinion of the incident or incidents involved.

9.5.3 **Problem solving:** Co-operate with the TD to solve problems concerning rules or rule interpretations.

10 Game protocols and procedures

10.1 Team entry and departure from ice surface protocol

In any Recognised Competition, where the participating teams enter and depart the ice surface using the same common door and hallway system, the following procedure is proposed to ensure that the teams enter and depart the ice surface in an orderly fashion and without incident. The game clock will be the only timing device used in the timing of all activities including the pre-game warm-up, the period intermissions and the actual game itself.

10.1.1 **Clock:** At the conclusion of the first and second periods, as soon as the buzzer sounds, signalling the end of the period, the game clock will be immediately re-set with the appropriate intermission time.

10.1.2 **Intermissions:** At the end of the first and the second periods, the visiting team will return to its players' bench and remain there until the entire home team has departed the ice surface and entered the common hallway. Once the last player of the home team has entered the common hallway, then the referee will motion the visiting team to leave the ice surface.

10.1.3 **Return to ice warnings:** To notify the teams that it is time to return to the ice surface at the beginning of each period, the official game timekeeper will sound a buzzer in the dressing room area to inform the teams using the following systems at each ice hall:

- 4 minutes remaining on the game clock - One blast of the alarm by the official game timekeeper indicating that in two minutes the teams will be called to the ice surface.
- 2 minutes remaining on the game clock - Two blasts of the alarm by the official game timekeeper calling for the home team to immediately leave their dressing room and return to the ice surface. The visiting team immediately follows the last player of the home team to the ice surface.

10.1.4 **End-of-game protocol:** At the conclusion of the game, the losing team will depart the ice surface first, with the winning team waiting on the ice until the losing team has left the ice surface. Once the last player of the losing team has entered the common hallway, then the referee will motion the winning team to leave the ice surface.

10.1.5 **Adaptation:** The Directorate may agree on an adaptation to this Regulation taking the positions of the dressing rooms of the two competing teams into consideration and the accessibility to the ice surface.

10.2 Pre-game warm up following an extended game protocol

10.2.1 **General:** The game schedule for Recognised Competitions has been produced using a set of consistent planning guidelines and principles. The approved game schedule has been designed to leave sufficient time at the conclusion of one game to re-surface the ice and set up for the next game's pre-game warm-up.

10.2.2 **Delay:** As soon as the game supervisor has informed the TD that a game will not be finished within 55 minutes of the scheduled start time of the next game, the TD will call a meeting which will include the Directorate members from the two teams to play the next game and the LOC representative. The following guidelines are provided to assist in making the necessary decisions and are not binding:

(a) If the first game finishes 55 minutes or more before the scheduled start time of the next game then a full 'flood' ice re-surfacing should be provided for the pre-game warm-up of the next two teams.

(b) If the first game finishes with less than 55 minutes and more than 45 minutes before the scheduled start time of the next game, then a 'scrape' resurfacing should be provided for pre-game warm-up of the next two teams.

(c) Should the first game finish with less than 45 minutes before the scheduled start time of the next game, then the next two teams may warm-up without any ice-resurfacing or may be provided with a 'scrape' resurfacing if both teams agree to a shortened pre-game warm-up.

(d) In any case, if an adjacent arena is available, the pre-game warm-up may be held there.

10.2.3 **Informing other parties:** Once the decision is made to provide a 'scrape' resurface or no ice resurface, then the members listed above will be responsible to advise the relevant parties of the situation and have them act accordingly.

10.2.4 **Presence of meeting participants:** In order to facilitate the procedures descried in this section, the TD, the Directorate members of the next teams to play, and the LOC representative should be in attendance at the arena and available for the meeting at least 70 minutes before the scheduled start time of the relevant game.

10.3 Game-ending protocol

Unless otherwise directed, at the end of each game when the winner is declared both teams will take off their helmets and line up on their respective blue lines, facing the flagstaff on which the national flag of the winning team will be hoisted and during which time the national anthem of the winning team is played. In the case of a NPC whose team member(s) fail to observe this ceremony will be submitted to the Directorate for possible further sanctions.

10.4 Overtime procedures

Overtime periods and Game Winning Shot Procedures in any Recognised Competition shall be handled in accordance with the IPC ISH Rulebook.

10.5 Commercial break procedure

If taken, commercial breaks shall comply with the following procedure:

10.5.1 **General:** During each regular period of the games there may be up to two commercial breaks, each with duration of 70 seconds. This commercial format will be followed during all televised championship games to ensure consistency for teams and broadcasters alike.

10.5.2 **Eligible stoppages:** Commercials may only be granted when teams are at equal strength (4 on 4, 5 on 5, or 6 on 6) when a stoppage in play occurs. The determination of equal strength is the number of players on the ice at the time of the whistle. Therefore, if Team A is a man down, and a penalty is called on Team B, a commercial break is not allowed. The only exception to the equal-strength requirement is a five-minute (coincidental) major penalty. When a team is a man down due to a five-minute major penalty, a commercial break may be administered. However, if a two-minute minor penalty is assessed to the same team during the five-minute major penalty (creating a 5 on 3 situation) no commercial break shall be taken until the major penalty ends.

10.5.3 **Timing:** Commercial breaks will be taken at the first stoppage of play after the following times on the game clock as it counts down:

- 11:00 minutes
- 06:00 minutes

10.5.4 **Exceptions:** Notwithstanding the foregoing, no commercial breaks will be taken:

- in the final 30 seconds of the first and second periods;
- in the final two minutes of the third period, or in overtime, with the exception of the Gold medal game where the above procedure will apply for the 15 minute overtime period;
- when a goal is scored;

- when there is a call for a penalty shot;
- when an icing infraction is called, except when a penalty or penalties are assessed at the icing call that affect the on-ice strength of either team; or
- when a fight is happening on ice.

10.5.5 **Missed commercial breaks:** In the event that a commercial break is not taken during the prescribed time slot because of penalties or the flow of the game, the missed commercial opportunity will be made up at the first whistle in the next commercial break time slot. The second commercial break will then be taken at the third stoppage of play following the first commercial break. If there is another incident where the second commercial break is missed, this procedure will continue to repeat itself until all breaks are taken.

10.5.6 **Procedures:** The procedure for taking the commercial break is as follows:

(a) A commercial co-ordinator will be nominated by the LOC.

(b) At the whistle a red signal lamp will be immediately illuminated by the commercial co-ordinator at the Scorekeeper's bench, signalling that the commercial break is in progress.

(c) The penalty box attendants open the doors for the duration of the commercial break.

(d) The commercial co-ordinator signals the TV truck that there is a commercial and immediately starts timing the break.

(e) One linesman places the puck on the ice where the next face-off will take place while the referee proceeds to the Scorekeepers bench.

(f) The players proceed to their respective benches while the other linesman stands between the player benches.

(g) With 20 seconds left in the break, the commercial co-ordinator cues (20 second cue card) the referee to blow the whistle to indicate that the players proceed to the face-off spot.

(h) With five seconds left in the break the back linesman gets a cue (5 second cue card) from the commercial co-ordinator to blow the whistle and begin the face-off procedure.

(i) The puck should drop at the 70 second mark.

(j) The commercial co-ordinator should turn the red signal lamp off at the 70 second mark.

10.5.7 **Additional commercial breaks:** Additional commercial breaks will be permitted during a time slot if a delay is required to address a player injury, repair to the playing surface (e.g. glass, boards, net), or any other issue which may require excessive time to remedy. Extra commercial breaks taken during a time slot must follow the normal commercial break procedure. Any extra commercial break will take the place of the

scheduled break in the last remaining time slot of that period and will not be used to create extra commercial breaks. In such instances, the commercial co-ordinator will be instructed to turn on the light to indicate that an optional commercial break opportunity is being taken.

10.5.8 **Goal keepers:** During commercial breaks goalkeepers will be allowed to go to their respective players' bench.

10.5.9 **Line changes:** Teams are allowed to change lines once the referee blows the whistle signalling the teams to return to the face-off with 20 seconds remaining in the commercial break. These line changes will follow the same protocol as a normal line change during a stoppage of play.

10.5.10 **Time outs:** Teams will be allowed to request their official time-out from the referee once they are called back to the ensuing face-off by the referee's whistle with 20 seconds remaining in the commercial break. The referee will immediately advise the official Scorekeeper of the time-out request and the official time-out will follow the normal protocol in these Regulations.

10.6 Jumbo screen usage policy

10.6.1 **General policy:** The use of the arena video board (Jumbotron) is an essential part of the game presentation used to enhance the game experience for the spectators. The use of the video board should not interfere with the game and should not be used in such a way as to create a hostile environment in the arena or to portray the game, players, officials or spectators in an unsportsmanlike or negative way. The use of the arena video board should have a balance between: a) sportive contents; (replays); b) entertainment; and c) public information.

10.6.2 **In-game replays:** Replays of all game action or hockey plays (goals, passes, body checks, goalkeeper saves, blocked shots, minor penalties including those that result in a penalty shot, post-whistle scrums unless they result in violent fisticuffs and major penalties unless the consequences are sever) may be shown on the in-arena video board without limitation. When showing replays of a penalty call, all available camera angles of the play must be used for transparency and clarity for spectators.

10.6.3 **Video goal judge replay:** Footage from the video goal judge replay system may be shown on the in-arena video board one time while the play is being reviewed and one additional time after the replay call has been made. After the replay call has been made, if there are multiple camera angles of the play available, the camera angle that was relied on to make the ultimate call must be the camera angle utilised on the video board. If there is a question as to which camera angle was relied on, the director of the video board should consult with the video goal judge.

10.6.4 **Injuries:** When there is an injury on the ice there may be no replay until the injured player or game official has left the ice; When there is an obvious sign of serious injury (profuse bleeding, broken bone, unsteady skating), the play may be replayed one time immediately after the injured player of game officially leaves the ice, this is exclusively for the purpose of informing the spectators. The play shall not be shown on the in-arena video board for any purpose thereafter.

10.6.5 **Spectators:** Spectators should only be shown on the in-arena video board in a positive light. Examples of instances where spectators may not be shown on the video board include, but are not limited to, spectator injuries and spectators engaging in violence, making obscene gestures, showing obscene signs, verbally abusing players or officials, throwing objects to the ice or sleeping.

10.6.6 **Fisticuffs:** Fisticuffs (fights) may not be shown on the in-arena video board if the fight is of a violent nature with players throwing repeated punches at each other. This should not be equalled with a "post-whistle scrum" with two or more players.

10.6.7 **Implementation:** This Jumbo Screen Usage Policy shall be coordinated by the in-arena video board director who shall have the technical support from the host broadcaster and support from the video goal judge. It is the video board director who is responsible that the decisions are taken in accordance with the above Section 10.6.

10.7 Scoreboard

The following timekeeping and scoreboard guidelines are recommendations for the organisers of IPC Recognised Competitions. In the arenas where the existing scoreboard system cannot give full information on the game proceeding there should be at least an electronic information board for additional game data and interesting news to spectators. In the arenas with an electronic cubic all information as defined below will be shown on this device:

10.7.1 **Team names:** Name of the home team on the left and of the visiting team on right part of the scoreboard device.

10.7.2 **Period:** Period with numerals 1-2-3, OVT for overtime, GWS for game winning shots.

10.7.3 **Game result:** Game result in two number positions for each team, home team left and visiting team right.

10.7.4 **Goals:** Goal scorer and maximum two assistants by jersey number on the scoreboard, home players left, visiting players right and by names on the information board.

10.7.5 **Time:** Game time in minutes from 0 to 15 and seconds from 0 to 60.

10.7.6 **Overtime:** Overtime in minutes and seconds from 0 to 15 in a Gold medal game, from 0 to 10 in other sudden victory play-off games.

10.7.7 **Penalised players:** Penalised player by number and penalty time in minutes and seconds on the scoreboard, home player left, visiting player right, and by name, penalty time, penalty code on the information board.

10.7.8 **Penalty time:** Penalty time counts down from total time to zero. Each team with three positions for 2 and 5 minutes penalties. Penalty of the two previous penalties is terminated.

10.7.9 **Further penalties:** Eventual further penalties will be kept in the timekeeping system memory and will show up in the third penalty position one by one.

10.7.10 **Timeouts:** Time-out will count down from 60 seconds to zero and appear in the actual game time position, which reappears automatically in its position.

10.7.11 **Game winning shots:** Game winning shots standing appears shot by shot in the position of the game result.

10.7.12 **Game result:** After the last shot the game result including the decisive goal will appear in its position.

10.7.13 **Intermissions:** Intermission of 15 minutes after the first and second period starts counting down automatically when the period is terminated. Intermission of 3 minutes after the third period in case of overtime starts counting down automatically when the period terminated.

10.8 Game countdown

In general, the following procedures should be followed for the game countdown. A revised countdown process may be used where necessary to accommodate the timings of the opening and closing ceremonies, such as the introduction of the teams at the IPC World Championship. Any revised process must be approved by the IPC.

- 60:00 min: Siren sounds, team representatives provide the completed team composition form to the Scorekeeper.
- 43:00 min: One buzzer sounds to the team dressing rooms.
- 42:00 min: Two buzzer sounds to the team dressing rooms.
- 40:00 min: Teams enter the ice surface for 15 minute warm up.
- 25:00 min: Teams leave the ice and the ice resurface starts. Team representatives check official game sheets and provide captain; alternate captains and starting goalkeeper to the Scorekeeper.
- 06:00 min: Full team compositions appear on the information board.
- 05:30 min: One buzzer sounds to the team dressing rooms.
- 04:30 min: Two buzzer sounds to the team dressing rooms – teams go directly to bench and game officials enter the ice.

- 04:00 min: Teams enter the ice surface and skate one lap and then do 'cheer' ritual around goalkeeper. Official announcers introduce referees and linesmen.
- 03:00 min: Buzzer sounds and all players leave the ice and go to their respective benches, except the starting players (plus team captain if not starting) who line up on the blue lines. Team captains greet the referee and linesmen in the referee's crease and exchange gifts. Official announcers introduce the starting players for both teams.
- 00:15 sec: Referee calls the teams to face-off.
- 00:00: Reset clock to 15:00 and game starts.

10.9 Intermission countdown

Intermission countdown by scoreboard system before the second and third period and the fifteen minute overtime period:

- 15:00 min: Appears on the scoreboard automatically when the preceding period ends and begins to run immediately after it is reset.
- 04:00 min: One buzzer sounds to the team dressing rooms.
- 03:00 min: Game officials enter the ice.
- 02:00 min: Two buzzer sounds to the team dressing rooms and teams go directly to ice surface.
- 00:15 sec: Referee calls the teams to face-off.
- 00:00: Reset clock to 15:00 and period or overtime starts.

10.10 Overtime intermission countdown

Intermission countdown by scoreboard system before the five or ten minute overtime period:

- 03:00 min: Appears on the scoreboard automatically after the third period ends and begins to run immediately after it is reset.
- 00:15 sec: Referee calls the teams to face-off.
- 00:00: Reset clock to 05:00 or 10:00 and overtime starts.

11 Officials

11.1 Licensing international referees and linesmen

All international referees and linesmen must be licensed by the IPC ISH.

11.1.1 **Applications:** Applications to be an international referee or linesman must be submitted to IPC ISH office by 31 July in each year by the applicants relevant NF or NPC. Applications shall be made on the forms prescribed by the STC from time to

time and shall be accompanied with the applicable fee. The fee will be determined annually by the STC.

11.1.2 **Review:** The STC shall review all license applications for International Referees and Linesmen. The Head of Technical Control and Officiating (IPC ISH STC member) must record his or her recommendations together with the proposed list of licensed referees and linesmen to the STC for approval each year.

11.1.3 **Age:** The maximum age of referees and linesmen is 50 years of age as of 31 July in the year of the application.

11.2 Nomination of referees and linesman for Recognised Competitions

11.2.1 **General:** The STC will approve a list of licensed referees and linesmen annually (Licensed Referees and Linesmen). From this approved list the STC will propose the Licensed Referees and Linesmen for the various Recognised Competitions.

11.2.2 **Removal:** A Licensed Referees and Linesmen may only be removed from the list of licensed referees and linesmen by a resolution of the STC.

11.2.3 **Nomination:** The Licensed Referees and Linesmen for every game of a Recognised Competition will be nominated by the Head of Technical Control and Officiating, except in the World Championships and Paralympic Winter Games, where they will be nominated by the STC.

11.2.4 **Nationality:** Generally, Licensed Referees and Linesmen and goal judges selected to officiate a game in a Recognised Competition will be from different countries to those of the two teams taking part in that game.

11.2.5 **Licences:** International games that are not Recognised Competitions, must be officiated by Licensed Referees and Linesmen appointed by the respective NF or NPC.

11.3 Referee duties

11.3.1 **General:** The referee appointed to a game will have general supervision of that game, full control of all game officials and players, and his/her decision on any matter covered by the IPC ISH Rulebook in respect of that game shall be final.

11.3.2 **Before the game:** Before commencing a game the referee shall ensure that the appointed officials are in their respective places and be satisfied that the timing and signalling equipment are in order. The referee shall order the teams on the ice at the appointed time for the beginning of each period.

11.3.3 **Penalties:** The referee shall impose and report to the Scorekeeper such penalties as are prescribed by the playing rules for infractions thereof. The referee shall determine the goals scored. The referee may consult with the linesmen, goal judge and video goal judge, if available, in matters of disputed goals before making a decision, which

shall be final. The referee shall report to the Scorekeeper the name or number of goal scorers and any player(s) entitled to assists.

11.3.4 **Announcements:** At the first stoppage of play the referee shall cause to be announced over the public address system the reason(s) for not allowing any goal(s).

11.3.5 **Measurements:** The referee shall have the discretion to measure any equipment at any time, or if requested by the captain of either team in accordance with the IPC ISH Rulebook.

11.3.6 **Start of period:** The referee shall order the teams on the ice at the appointed time for the beginning of any period.

11.3.7 **Face-offs:** The referee will face-off the puck at the beginning of each period and after a goal has been scored.

11.3.8 **Official game sheet:** The referee shall obtain the official game sheet from the Scorekeeper immediately following a game. The referee shall verify that the information on the sheet is correct and if it is, will sign the sheet and return it to the Scorekeeper. The referee shall report on the official game sheet immediately following the game, giving full details to the game supervisor for all game misconduct penalties and match penalties.

11.4 Linesman duties

11.4.1 **Infractions:** The linesmen shall be responsible mainly for any infractions concerning the lines (off-side, icing the puck). The linesmen shall determine and stop the play by blowing the whistle for any infraction of the rules concerning:

- Off-side.
- Icing.
- Puck out of bounds, un-playable or interfered with by an ineligible person.
- Goal displaced from its normal position.
- Off-side occurring during face-off.
- Premature substitution of a goalkeeper.
- Interference by spectators.
- Injured player(s).
- Pass with the hand from a player to a teammate.
- High sticking the puck.
- Hand pass or high sticking the puck if the referee did not observe the infraction.

11.4.2 **Penalties:** The linesmen shall blow the whistle and report to the referee penalties concerning too many players on the ice and/or anything (including sticks) thrown on the ice from the vicinity of the players or penalty benches.

11.4.3 **Reports:** The linesmen shall report to the referee when requested to do so by the referee and give their versions of any incident that may have taken place during a game. The linesmen shall immediately report to the referee in case of:

- Deliberate displacement of the goal net from its normal position.
- Bench Minor penalties.
- Major penalties.
- Misconduct penalties.
- Game Misconduct penalties.
- Match penalties.

11.4.4 **Faceoffs:** The Linesmen shall conduct the face-offs at all times, except at the start of each period and after a goal has been scored.

11.5 Incapacitated referee or linesman

11.5.1 **Before the game:** If, for any reason, the appointed referee or linesmen are prevented from appearing, the Referee Supervisor shall appoint a replacement(s).

11.5.2 **During the game:** If a referee leaves the ice or is injured, one of the linesmen shall immediately stop the play, unless one team has a scoring opportunity, in which case that linesman will allow play to continue for as long as the linesman considers necessary before stopping play. If the referee is unable to continue to officiate, one of the linesmen shall perform the referee's duties. The new Referee shall be selected by the Referee Supervisor, or if the Referee Supervisor is not available the referee or, if necessary, by the team leaders. If a linesman is unable to officiate, the referee shall have the power to appoint a replacement if necessary. If the appointed official reappears during the progress of the game, the original official shall replace the temporary official at once.

11.6 General duties

11.6.1 IPC ISH **Rulebook:** The duties of the referee and linesmen in the three official system are further detailed in the IPC ISH Rulebook.

11.6.2 **Remain on ice:** The referee and linesmen shall remain on the ice at the conclusion of each period and at the end of each game until all of the players have left the ice and are proceeding to their dressing rooms.

11.7 Uniform for referees and linesmen

11.7.1 **Uniform:** At IPC ISH Competitions and IPC ISH Sanctioned Competitions Licensed Referees and Linesmen shall wear the following:

- plain black trousers
- a black helmet with a visor

- a vertically striped black and white sweater (3 cm wide stripes)
- the IPC ISH crest on the left front part of the sweater
- a red armband 8 cm wide on the upper part of each sleeve (only for referees)

11.7.2 **Advertising:** It is forbidden for Licensed Referees and Linesmen to wear any advertising trademark or manufacturer's identification during Recognised Competitions unless such advertising has been arranged or approved by the IPC and is consistent with the IPC Ice Sledge Hockey Uniform Advertising Guidelines. If the IPC has arranged advertising for Licensed Referees and Linesmen they are obliged to wear it in accordance with any instructions of the IPC.

11.8 Appointment and duties of off-ice officials

For all IPC ISH Competitions and IPC ISH Sanctioned Competitions, the following off-ice officials shall be appointed by the IPC ISH and approved by the Referee Supervisor:

- Two Goal Judges.
- One Scorekeeper (with up to two assistants).
- One Timekeeper.
- One Public Announcer.
- Two Penalty Bench Attendants.
- One Video Goal Judge (where available).

11.9 Goal Judges

Each Goal Judge shall be responsible for determining if the puck has passed between the goal posts and completely over the goal line.

11.9.1 **Position:** There shall be two Goal Judges for each game stationed behind each goal. The Goal Judges shall not change goals during the game.

11.9.2 **Nationality:** In IPC ISH Competitions and IPC ISH Sanctioned Competitions the Goal Judges of a game shall generally not be nationals of either team engaged in the game.

11.9.3 **Uniform:** The Goal Judges shall wear officials' sweaters.

11.9.4 **Relationship with the Referee:** For any disputed goal, the referee may consult with the relevant Goal Judge, but the referee shall make the final decision. The referee may also replace a Goal Judge at any time during a game in the sole discretion of the referee.

11.10 Scorekeeper

The Scorekeeper shall have the following responsibilities:

11.10.1 **Official game sheet:** The Scorekeeper shall obtain from the manager or coach of both teams, the list of all eligible players and shall complete the Official Game Sheet with the following information:

(a) Name, position and number of each player, indicating the captain and alternate captain by placing the letters «C» and «A» in front of their names.

(b) All data concerning the game, such as location, date, names of the home and visiting team and names of the officials.

(c) The goals scored.

(d) The number of the scorer(s) and players to whom assists have been allowed.

(e) The players of both teams who are on the ice when a goal is scored.

(f) All penalties imposed by the officials with the numbers of the penalised players, the infraction, the time at which it was imposed, and the duration of each penalty.

(g) Each penalty shot awarded with the name of the player taking the shot and the result of the shot.

(h) The time of entry into the game of any substitute goalkeeper.

(i) While in general, the on-ice officials shall determine the players entitled to receive assists, during the Paralympic Winter Games, the Scorekeeper shall do so.

(j) No request for changes in any award of points shall be considered unless they are made by the captain before the conclusion of actual play in the game or before the referee has signed the Official Game Sheet.

11.10.2 **Additional Responsibilities:** In addition, the Scorekeeper shall be responsible for:

(a) Correct posting of the penalties and goals scored on the scoreboard.

(b) Ensuring that the time served by all penalised players is correct.

(c) Promptly calling to the attention of the referee any discrepancy between the time recorded on the clock and the official correct time.

(d) Making any adjustments as ordered by the referee.

(e) Advising the referee when the same player has received a second misconduct penalty in the same game.

(f) Prepare the official game sheet for signature by the referee and forward it to the TD or Assistant TD.

11.11 Timekeeper

The Timekeeper shall have the following duties. In the event of any dispute regarding time, the referee's decision will be final.

- Carry out the game countdown before the game in accordance with the provisions in Section 10.8.

- In case no automatic buzzer or siren is provided, signal by a buzzer, siren or whistle the end of each period or overtime period.
- Give a preliminary warning by signal to the officials and both teams three minutes before the start of each period.
- Record the start and finish times of each period and the game.
- Time the 15 minute intermission between each period.
- Record all actual playing time during the game.
- Record the time of the start and finish of all penalties.
- Time the start and finish of time-outs.

11.12 Public Announcer

The following announcements are compulsory for the information of players, coaches, officials, and spectators:

11.12.1 **Goals and assists:** "*Goal for team (name of team), scored by number (number of goal scorer), (name of goal scorer), assisted by number (number of first assistant), (name of first assister), and by number (name of second assister), (name of second assister), time of the goal (time of goal scored).*"

11.12.2 **Penalties:** "*Team (name of team), number of penalised player), name (name of penalised player), 2/4/5/10 minutes penalty for (penalty reason), time (time of the penalty).''* The penalty of the visiting team shall be announced first.

11.12.3 **Goalkeeper or bench penalties:** In the case where a penalised player cannot go to the penalty bench, or in case of a goalkeeper penalty or bench penalty, add "*the penalty is served by number, name (name of the player serving the penalty).*"

11.12.4 **End of penalties:** "*End of penalty for team (name of team)* (if other penalties are being served that make this team shorthanded): "*Team (name of team) is playing at full strength*", or "*Both teams are playing at full strength*" (if no penalties remain for either team).

11.12.5 **Review by Video Goal Judge:** "*Play is being reviewed.*" In case goal is given, announcement for "Goal and assists" will be used (see above). In case no goal is given: "*No goal has been scored.*"

11.12.6 **Time Out:** "*Time out for team (name of team).*"

11.12.7 **End of time out:** "*Time out is over.*"

11.12.8 **One minute remaining:** "*One minute left in the (first/second/third) period.*"

11.13 Penalty Bench Attendant

One Penalty Bench Attendant shall be appointed for each team penalty bench. The Penalty Bench Attendant shall be responsible for:

11.13.1 Providing a penalised player, upon request, with the correct information as to the unexpired time of the penalty.

11.13.2 Allowing the penalised player to return to the ice at the appropriate time upon the completion of the penalty.

11.13.3 Notifying the Scorekeeper if a player leaves the penalty box before the end of the penalty.

11.14 Video Goal Judge

If available, but at all Paralympic Winter Games, the use of the video replay of disputed goals is approved by IPC ISH in accordance with the following provisions:

11.14.1 **General:** All reasonably available television pictures must be provided and used by the Video Goal Judge for the video replay system. The replay system available to the Video Goal Judge must be equivalent to the Olympic or IIHF standards and approved by the STC at least five days prior to the first day of competition.

11.14.2 **Reviewable situations:** The following situations are the only situations that will be subject to "Video Goal Judge Review":

- To determine if the puck has completely crossed the goal line.
- To determine if the puck entered the net prior to or after the goal frame was dislodged.
- To determine if the puck entered the net prior to or after expiration of time at the end of a period or the game.
- To determine if the puck was directed into the net by a hand or a sledge.
- To determine if a puck deflected into the net off of a game official.
- To determine if the puck was struck with a high stick, above the top of the head, by an attacking player, prior to the puck entering the net.
- To establish the correct time on the official game clock at the point that the puck completely crossed the goal line, provided that the game time is available on the Video Goal Judge's monitor.

11.14.3 **Procedure:** The following procedures will be followed for a Video Goal Judge Review:

(a) When the referee requests a video review of a disputed goal, the referee will contact the Video Goal Judge from the Scorekeeper's bench using a telephone system which has been installed for this purpose.

(b) When the Video Goal Judge requests a review, the Video Goal Judge will contact the Scorekeepers bench using the telephone system during the first stoppage of play after the incident has occurred in order to inform the Referee that the play is under video review.

(c) When a video review is requested by either the referee or by the Video Goal Judge, the Public Address Announcer will make the video judge review announcement ("*The play is being reviewed*").

(d) If the video review is inconclusive then the Video Goal Judge will report this to the Referee who will then make the final decision.

(e) Following the review and the subsequent decision, the appropriate announcement by the Public Address Announcer shall be made ("*A goal has been scored at…*" or "*No goal has been scored.*").

(f) A team does not have the authority to request a video review of a play.

(g) If the puck enters the net and play is stopped, the referee or the Video Goal Judge are to ask for a review during this stoppage of play. If there is no review during this stoppage of play then the result is final and no review of the play will be permitted at a later time.

(h) If the puck enters the net and play continues, then the review takes place during the first stoppage of play following the incident. If no review is performed during this first stoppage of play then no review of the play will be permitted at a later time.

(i) When a referee or a Video Goal Judge indicate that there is to be a video review, then all players must go to their respective team benches.

(j) A video review of the play may be called even though the first stoppage of play signals the end of a period or the end of a game.

11.15 Remuneration for appointed officials

All IPC appointed officials including referees, linesmen, technical delegate, classifiers and other officials appointed to work at IPC ISH Competitions and IPC ISH Sanctioned Competitions shall be compensated according to the IPC Cost Recovery Policy .

Chapter three: Competition calendar

2015 – 2018

Year 1 (2015)	Year 2 (2016)	Year 3 (2017)	Year 4 (2018)
World Championships A-Pool	World Championships C-Pool	World Championships A-Pool	Paralympic Winter Games
World Championships B-Pool	Regional Championships (European	World Championships B-Pool	

	Championships & Pan Pacific)		
		Paralympic Winter Games Qualification Tournament	World Championships C-Pool

12 Regional and World Championships

12.1 Year 1

12.1.1 **A-Pool:** The 2015 IPC Ice Sledge Hockey World Championships A-Pool will consist of the top six (6) ranked teams from the 2013 IPC Ice Sledge Hockey World Championships A-Pool and the top two (2) ranked teams from the 2013 IPC Ice Sledge Hockey World Championships B-Pool.

12.1.2 **B-Pool:** The 2015 IPC Ice Sledge Hockey World Championships B-Pool will consist of the two (2) teams ranked #7 and #8 from the 2013 IPC Ice Sledge Hockey World Championships A-Pool and the four (4) teams ranked #3, #4, #5 and #6 from the 2013 IPC Ice Sledge Hockey World Championships B-Pool.

12.2 Year 2

12.2.1 **C-Pool:** The 2016 IPC Ice Sledge Hockey World Championships C-Pool will consist of:

- one (1) relegated team following the 2015 IPC Ice Sledge Hockey World Championships B-Pool;
- any national teams of NPCs that did not attend the 2013 IPC Ice Sledge Hockey World Championships B-Pool; and
- any emerging national teams of NPCs newly practicing ice sledge hockey subject to being in a good standing with the IPC.

12.2.2 **Regional Championships:** The IPC Ice Sledge Hockey Regional Championships may be held in any region with three (3) or more NPCs widely and regularly practicing the sport.

- **European Championships:** This event will consist of the top 10 ranked European teams based on the previous year's World Championships A- & B-Pool results. The STC has the discretion to confirm the final composition and seeding of this championship.

- **Pan Pacific Championships:** This event will consist of the nations actively participating in ice sledge hockey in North America and Asia. The STC has the discretion to confirm the final composition and seeding of this championship.
- The STC will determine the viability and composition of any other Regional Championships.

12.3 Year 3

12.3.1 **A-Pool:** The 2017 IPC Ice Sledge Hockey World Championships A-Pool will consist of the top six (6) ranked teams from the 2015 IPC Ice Sledge Hockey World Championships A-Pool and the two (2) top teams ranked #1 and #2 from the 2015 IPC Ice Sledge Hockey World Championships B-Pool.

12.3.2 **B-Pool:** The 2017 IPC Ice Sledge Hockey World Championships B-Pool will consist of the two (2) teams ranked #7 and #8 from the 2015 IPC Ice Sledge Hockey World Championships A-Pool, the three (3) teams ranked #3, #4, #5 from the 2015 IPC Ice Sledge Hockey World Championships B-Pool and one (1) promoted team from the 2016 IPC Ice Sledge Hockey World Championships C-Pool.

12.3.3 **Paralympic Winter Games Qualification Tournament:** The Paralympic Winter Games Qualification Tournament will be held in Year 3 of the competition calendar.

12.4 Year 4

12.4.1 **Paralympic Winter Games:** The Paralympic Winter Games will be held in Year 4 of the competition calendar.

12.4.2 **C-Pool:** The 2018 IPC Ice Sledge Hockey World Championships C-Pool will consist of:

- one (1) relegated team following the 2017 IPC Ice Sledge Hockey World Championships B-Pool;
- any national teams of NPCs that did not attend the 2015 IPC Ice Sledge Hockey World Championships B-Pool; and
- any emerging national teams of NPCs newly practicing ice sledge hockey subject to meeting IPC minimum eligibility standards.

13 Paralympic Winter Games

13.1 Qualification and seeding

13.1.1 **Qualification procedures:** The Paralympic Winter Games Ice Sledge Hockey Tournament will consist of:

(a) the top five (5) ranked teams from the Ice Sledge Hockey World Championship in A-Pool Tournament ('top 5 teams') in year 3 of the competition cycle;

(b) the Paralympic Winter Games host nation NPC (if not otherwise qualified as a 'top 5' nation), subject to having competed in the previous two IPC Ice Sledge Hockey World Championships in either the A- or B-Pool Tournaments; and

(c) up to three teams from the Paralympic Winter Games Qualification Tournament (depending on the status of the host nation qualification).

13.1.2 **Seeding procedures:** The top 5 teams are "seeded" according to their final standings in the A-Pool tournament in year 3. The remaining teams are seeded from 5 to 8 according to their final positions in the Paralympic Winter Games Qualification Tournament.

13.2 Paralympic Winter Games Qualification Tournament

13.2.1 **General:** The Paralympic Winter Games Qualification Tournament shall be held to determine the remaining qualifying teams (after the top 5 have been established) and their seeding for the Paralympic Winter Games. If the host nation is amongst the top 5 teams (and therefore qualified) then they will not be entitled to compete in the Paralympic Winter Games Qualification Tournament and the Paralympic Winter Games Qualification Tournament will then determine the remaining 3 qualification slots and their order in the seeding. NPC participation in the Paralympic Winter Games Qualification Tournament is subject to pre-confirmation of team qualification slot usage.

13.2.2 **Participants:** This tournament shall be conducted as follows: The 6th, 7th and 8th ranked teams from the World Championship A-Pool Tournament in the year preceding the Paralympic Winter Games and the top 3 ranked teams from the World Championship B-Pool Tournament in that year will compete in a tournament for qualification in the Paralympic Winter Games. If the host nation is not included within the teams qualified for the Paralympic Winter Games Qualification Tournament and it wishes to participate at the Paralympic Winter Games then it will be ranked 8th seed for the Paralympic Winter Games. Any unused slots for the Paralympic Winter Games Qualification Tournament will be reallocated to the next ranked team from the World Championship B-Pool Tournament.

13.2.3 **Host nation participation:** If the host nation is not already qualified as one of the top 5, then the Paralympic Winter Games Qualification Tournament will determine the remaining 2 slots to be allocated. If the host nation takes part in the Paralympic Winter Games Qualification Tournament its finishing position shall determine its seeding position within the group of 3 nations that are not qualified within the top 5 teams.

13.2.4 **Qualification:**

(a) If the host nation has not qualified as a 'top 5' nation and it wishes to take up its host nation slot, then the top 2 teams from the Paralympic Winter Games Qualification Tournament (besides the host nation, if participating) shall be awarded the remaining positions at the Paralympic Winter Games.

(b) If the host nation has qualified as a 'top 5' nation or does not take up its host nation slot, then the top 3 teams from the Paralympic Winter Games Qualification Tournament shall be awarded the remaining positions at the Paralympic Winter Games.

13.2.5 **Reallocation of Unused Paralympic Games Slots:** Any unused slots for the Paralympic Winter Games will be reallocated to the next highest ranked NPC from the Paralympic Winter Games Qualification Tournament, which has not otherwise qualified. Any NPC that withdraws its team after confirming their participation may be subject to sanctions imposed by the IPC.

14 World Championship seeding

14.1 A-Pool

14.1.1 **Participants:** The top 8 teams based on the ISH World Ranking will be placed into the A-Pool.

14.1.2 **Groups:** The groups in A-Pool will be formed according to the ISH World Ranking as follows:

- Group A: 1-4-5-8
- Group B: 2-3-6-7

14.2 B-Pool

14.2.1 **Participants:** The teams placed 9-14 in the ISH World Ranking will be placed into B-Pool.

14.2.2 **Groups:** The groups in B-Pool will be formed according to the ISH World Ranking as follows:

- Group A: 1 (9WR) – 4 (12WR) – 5 (13WR)
- Group B: 2 (10WR) – 3 (11WR) – 6 (14WR)

14.2.3 **Alternative Format**: At the discretion of the STC, the B-Pool World Championships may be played as a "Round Robin" with the schedule determined by the ISH World Ranking.

14.3 C-Pool

14.3.1 **Participants:** The teams placed 14 and above (i.e. 15, 16 etc.) in the ISH World Ranking , any new national teams of NPCs that have not yet participated in a World Championships and Combined National Teams that comply with Section 14.3.3 below may be eligible to compete in the C-Pool. In order to determine the seeding for newly practicing nations who have not previously competed in a World Championships, seeding priority will be given to the nations in the order that their registration and team licensing is submitted and approved by the IPC ISH for that season. National teams will have seeding priority over Combined National Teams in the C-pool.

14.3.2 **Format:** The format of the C-Pool shall be determined by the STC based on the number of participants and the available facilities.

14.3.3 **Rules for Combined National Teams:** Combined National Teams are teams made up of players with a maximum of two represented nations per team. Players who compete for a Combined National Team must be a national of the country that his or her NPC represents as part of the combined team, in accordance with the provisions of the IPC Athlete Nationality Policy (IPC Handbook Section 2, Chapter 3.1). Combined National Teams will not be promoted to the B-Pool under any circumstances.

14.4 ISH World Ranking

The ISH World Rankings are determined by the most recent World Championships results. The Paralympic Winter Games results shall have no bearing on the ISH World Ranking system.

Chapter four: Rules and regulations review

15 General

The IPC Ice Sledge Hockey Rules and Regulations will be reviewed at the Sport Forum and recommendations will be made to the STC for potential changes. The Sport Forums will provide opportunities to discuss any sport related matters but the formal rule and regulations review will be discussed in the designated meeting in Year 3.

15.1 Year 1

Sport Forum: Topics determined by the STC.

15.2 Year 2

Sport Forum: Topics determined by the STC.

15.3 Year 3

Review of the Rules and Regulations and NPC recommendations made to the STC.

15.4 Year 4

Following the Paralympic Winter Games, the IPC Management Team will undertake a full review of the Rules and Regulations, including STC recommendations for additions, deletions and changes. Changes will be implemented by the STC and IPC GB prior to the start of the new season (i.e. by 1 July of Year 4).

International Paralympic Committee

Adenauerallee 212-214
53113 Bonn, Germany

Tel. +49 228 2097-200
Fax +49 228 2097-209

ipcicesledgehockey@paralympic.org
www.ipc-icesledgehockey.org

© 2016 International Paralympic Committee – ALL RIGHTS RESERVED
Photo ©: Getty Images

IPC SNOWBOARD

International
Paralympic Committee

Snowboard Rules and Regulations

December 2016

IPC SNOWBOARD

Official IPC Snowboard Supplier

LISKI
SPORT EQUIPMENT

www.IPC-Snowboard.org

@IPCSnowboard ParalympicSport.TV /IPCSnowboard

IPC Snowboard Rules and Regulations

For Snowboard Cross, Banked Slalom, Giant Slalom, Team Events

2016/2017 Season – valid until 1 October 2017

Contents

Section 1: Regulations 5

300 Joint Regulations for IPC Snowboard 5

301 IPCSB Competitions 5

An event is a competition in snowboard or in one of its disciplines. It results in a ranking and gives rise to the award of medals and/or trophies 6

302 World Cup (Level 0) and Continental Cup (Level 1) Point System, Rankings and Trophies 6

303 IPC Snowboard Calendar 7

304 IPC Snowboard Race Licence (IPCSB Licence) 9

305 Race Licence Pre-requisites 12

306 Competitor's Obligations and Rights 12

307 Sponsorships and Advertising 13

308 Display of Competition Equipment 13

309 Organisation of Competition 13

310 Invitation/Programme 14

311 Competition Administration and Fee Regulations (Athletes and Organising Committees) 14

312 Competition Entries 16

313 Team Captains Meetings 17

314 Draw 17

315 Start List/Publication of Results 17

316 Competitor Medical Examinations and Compliance with the IPC Anti-Doping Code 18

317 Medical Services Required from Event Organisers 18

318 Competition Equipment 19

319 Equipment Controls 20

320 Gambling and Competitions 20

321 Sanctions 20

322 Procedural Guidelines 22

323 Protests 23
324 Place of Submission 23
325 Deadlines for Submission 23
326 Form of Protests 24
328 Authorisation 24
329 Settlement of Protests by the Jury 25
330 Appeals 25
Section 2: Rules common to All Snowboard Disciplines 28
1300 Race organisation and management 28
1301 The Jury 34
1302 Roles of the Jury 35
1303 The Technical Delegate (TD) and his duties 38
1304 Gate Judges 39
1305 Course setter 40
1306 Forerunners 41
1307 Start, finish, timing and calculations 42
1308 Start and finish officials 42
1309 The Start 43
1310 Course and competition 44
1311 Competition 45
1312 The Finish 46
1313 Award ceremony 47
1314 Starting order 47
1316 Re-runs 47
1317 Interruption or Termination of the run or training 48
1318 Not permitted to start 49
1319 Disqualifications 49
1320 Competitions under artificial light 49

1321 Poles 49
1322 Gate flags 49
Section 6: Specific rules for IPCSB Snowboard 50
1400 IPC Snowboard courses 50
1401 Technical data for Snowboard Cross (SBX) 50
1402 Technical data for Banked Slalom (BSL) (LEVEL 0 – 1) 51
1403 Technical data for Giant Slalom (GS) 51
1404 Start 52
1404 Course design. Course building and maintenance plan 52
1407 Inspection/Training 53
1408 Execution of Snowboard Cross (head to head event) 53
1409 Finals Snowboard Cross (head to head event) 54
1410 Snowboard Cross (Head to Head events) 55
1411 Final Ranking 56
1412 Execution of Snowboard Cross, Banked Slalom and Giant Slalom (Time trail events) 57
1413 Race points calculation process 59
1414 Point scales 61
1415 IPCSB SBX BSL TT Points calculation process 68
GLOSSARY OF ACRONYMS 69

Section 1: Regulations

300 Joint Regulations for IPC Snowboard

300.1 All competitions on the IPC Snowboard (IPCSB) Calendar must be organised in accordance with IPC Handbook and IPC Snowboard Rules and Regulations.

300.2 **Participation and Recognition of National Organisations**
Competitions listed on the IPC Snowboard Calendar are only open to properly licensed competitors entered by their National Paralympic Committees (NPC) or organisations with the delegated authorization of the nation's NPC.

IPCSB recognizes only one national organisation per nation to enter competitors in IPCSB competitions. However, the NPC will maintain the exclusive right and recognition to enter athletes from their nation in the Paralympic Winter Games and IPC Snowboard World Championships.

300.3 **Sanctions / Penalties**
Every legal sanction or penalty imposed on and published in respect of a competitor, official, coach or Federation will be recognised by IPCSB and the NPC.

300.4 **Technical Control**
All competitions listed in the IPC Snowboard Calendar must be supervised by:

- appointed IPC Snowboard Technical Delegate, and
- for WCH and WC, an appointed IPC Snowboard Race Director.

300.5 Every legal sanction imposed and published in respect of a competitor, official or trainer will be recognised by IPCSB, the NPC, and the authorized National Ski Federations (NSF) respectively.

301 IPCSB Competitions

The following Snowboard competitions are sanctioned by IPCSB and are subject to regulations regarding participation and/or qualification:

- Paralympic Winter Games (PWG)
- IPC Snowboard World Championships (WCH)
- IPC Snowboard World Cups (WC)
- IPC Snowboard Continental Cups (COC)
  - IPCSB European Cup (EC)
  - IPCSB North American Cup (NORAM)
  - IPCSB South American Cup (SAC)
  - IPCSB Asian Cup (AC)
  - IPCSB Southern Hemisphere Cup (SHC)

- IPCSB National Championships (NC)
- IPC Snowboard SPECIAL events

A competition event may comprise one or several snowboard disciplines. For example, the IPC Snowboard World Cup Finals is an event, whereas the snowboard cross is a discipline.

301.1 **Paralympic Winter Games (PWG), World Championships (WCH), World Cups (WC), Continental Cups (COC), National Championships (NC), IPCSB Races (IPCSB), IPCSB Team Event**

Disciplines
The disciplines that may be considered for IPCSB events are as follows:

DISCIPLINES		CLASS
Snowboard Cross Head to Head	Men and Women	All Classes
Banked Slalom	Men and Women	All Classes
Snowboard Cross Time Trial	Men and Women	All Classes
Giant Slalom	Men and Women	All Classes

301.2 **Competitions with Non-Members of IPCSB**
The IPCSB STC can authorise one of its member NPCs or authorized NSF to invite a non-member organisation (military, masters, etc.) to competitions, or accept invitations from such an organisation.

301.3 **IPCSB Events**
An event is a competition in snowboard or in one of its disciplines. It results in a ranking and gives rise to the award of medals and/or trophies

302 World Cup (Level 0) and Continental Cup (Level 1) Point System, Rankings and Trophies

In order to have trophies awarded the following criteria must be met. World Cup (Level 0) requires events in at least two (2) different continents and at least two (2) different disciplines. Continental Cup (Level 1) requires events in at least two (2) different countries and at least two (2) different disciplines and a minimum of 6 races for overall trophy. A minimum of 4 races in a discipline are required in a competition calendar season to be eligible for the trophy in that discipline.

302.1 Cup Point System
Point system is apply to IPC Snowboard (see art. 1414)

302.2 Several Competitors Tied for the Same Position
If several racers are tied for one of the top thirty positions in a race, each of the competitors who are tied receives the points corresponding to that position. The

remaining competitors receive the points corresponding to their official classification in the race.

302.3 World Cup (Level 0), Continental Cup (Level 1) Individual/Overall Results

To calculate the individual rankings, all points in each discipline from the competition season are added.

To calculate the overall rankings, all points in all disciplines from the competition season are added.

In the event of a tie for the top three places, race points calculation in the discipline's races will be used to break the ties.

302.3 **World Cup (Level 0), Continental Cup (Level 1) Nations Ranking**

To calculate the nations ranking, all points from the competition season's individual standings of each nation will be added.

In the case of a tie the nation with less participants in that Cup will be awarded.

302.4 World Cup and Continental Cup Trophies

A World Cup trophy for the winner and medals for the top three (3) ranked athletes will be awarded in each category/discipline and the individual overall ranking competition.

The winners of the individual disciplines receive small World Cup trophies while the overall classification winners will receive large World Cup trophies.

A Continental Cup trophy for the winner and medals for the top three (3) ranked athletes will be awarded for each category in the overall ranking competition.

The Nations trophy will be awarded top ranked nation.

303 IPC Snowboard Calendar

The competition year begins 1 July and goes to 30 June of the following year.

303.1 **Bidding and Announcement**

303.1.1 Any National Paralympic Committee or authorised organisation is entitled to bid to organise the IPC Snowboard World Championships in accordance with the IPCSB Bid Application Process for World Championships.

303.1.2 Any National Paralympic Committee or authorised organisation is entitled to present a Host Expression of Interest for any IPCSB race (Levels WC,-COC, NC, IPCSB, Team Event.

Upon receipt of the application and approval by IPC Alpine Skiing the races will be included in the draft IPCSB calendar, www.ipc-alpineskiing.org/calendar. The

races will not be confirmed until IPC Alpine Skiing and Snowboard has received the signed agreement between the parties.

The organizer must send the event information to their National Paralympic Committee and the National Ski Association. The NSF must liaise with FIS secretary in order to obtain necessary Codex for the races.

303.1.3 *Appointment of Race Organiser*
In the event that the National Paralympic Committee or the National Ski Federation appoints a race organiser, such as an affiliated ski club, it shall do so using the form "Sanctioning Application" or by means of a similar written agreement. An application by a NPC or NSF for inclusion of an event on the IPCSB Calendar shall mean that the necessary agreement to organise the event has been established.

303.1.4 *Organisation of Races in other Countries*
Competitions that are organised by other National Paralympic Committee or National Ski Association may only be included in the IPCSB Calendar when the NPC or NSF of the country concerned where the competitions will be organised gives its approval, the approval must be sent to IPC Alpine Skiing and Snowboard.

303.1.5 In order to achieve a fixed competition calendar at least two years in advance, the following preferred dates for receipt of Host Expression of Interest apply.

Races	**Preferred submission date**	**Deadline**
Level 0, 1	2 years in advance	May meetings
Level 2, 3	1 year in advance	October meetings

The Interest Forms can be downloaded from:
http://www.ipc-alpineskiing.org/Downloads/
And must be sent to: ipcalpineskiing@paralympic.org

IPC Snowboard calendar is published on the website:
http://www.paralympic.org/snowboard/calendar

It will be periodically updated to reflect changes.

Official sanctioned IPCSB races must be published on the FIS calendar under the DAR category.

303.1.6 IPC Snowboard have to approve the courses where the competition will take the place as well in cases of force majeure new valid course.

303.1.7 In the case of a postponement/cancellation of a listed race from the IPCSB calendar, the organizer or hosting NPC or authorised NSF must inform IPC Alpine

Skiing immediately and a new invitation or notification must be released on the IPCSB website.

303.1.8 An organizer and its NPC failing to comply with the requirements set in the Sanctioning Application and/or formal Contract or Agreement is subject to sanctions by the IPC Alpine Skiing and Snowboard.

304 IPC Snowboard Race Licence (IPCSB Licence)

A licence to participate in IPCSB races is issued by an NPC to competitors who fulfill the criteria for participation through registering the competitor with IPCSB in the respective discipline(s).

304.1 The IPCSB licence year begins on July 1st and finishes on June 30th of the following year.

304.2. All athletes and guides competing in IPCSB races are required to have a valid IPCSB Licence.

All athletes competing at IPCSB events must comply with age criteria. Age is defined by birth year, eg.1998.

Athletes registration and licensing must be done through the SDMS on-line system http://www.paralympic.org/sdms/login.php. The registration requires the upload of the signed IPC Athlete Eligibility Code.

The new license will be valid after a maximum ten days (10) once the payment is confirmed.

Each NPC or authorised NSF has to purchase the licence for athlete ~~and guide~~ on a seasonal basis.

Licence has to be purchased ten (10) days prior to the first Team Captains Meeting of the alpine event the athlete competes in.

Each athlete must pay a 60 € fee. When paying after the October 1st of the competition year, the fee will be 90 €.

New athletes and guides, who have never held an IPCSB Licence, are allowed to purchase an IPCSB Licence by paying a 60 € fee at any time during their first season.

The IPC Governing Board will review the licence fees every 2 years.

Once the IPCSB Licence Fee has been paid, the competitor will be included in the next IPCSB Rankings Points List.

304.2.1 National Championship provisional licence (IPCSB NCP Licence)

Athletes competing in National Championships event (level 3) who do not hold a current IPCSB Licence need to purchase IPCSB NCP Licence to be included in an IPCSB draw.

NCP license registration must be done through the SDMS on-line system http://www.paralympic.org/sdms/login.php

The cost of the NCP license is 20 €. Holders of NCP license are allowed to start in all National Championships competitions. They are not eligible to compete in any other IPCSB sanctioned event.

The results achieved with this licence will not be included in the IPCSB points list. The athlete can upgrade to a full IPCSB Licence until the beginning of the following season (1 July) in order to have their results included in the IPCSB Points List.

An NCP licence allows competitors into Banked Slalom and Giant Slalom events only.

304.2.2 Youth License (IPCSB YL License)

Youth athletes from 10 to 17 years old can compete in NC races and Youth Competitions.

License fee is 20€

304.3 The IPCSB STC reserves the right in its absolute discretion, to grant or to decline to grant, a change of licence notwithstanding the fulfilment of the aforementioned conditions where it deems it is contrary to the spirit of the rule and in the best interests of IPCSB to do so (e.g. to decline to grant a change of licence if a member NPC tries to “import” a competitor).

304.4 In the event that a competitor does not fulfil all the criteria required to apply for a change of NPC licence registration, the onus shall be on the competitor to demonstrate in writing to the satisfaction of IPCSB that exceptional circumstances exist and it is in the best interests of IPCSB to grant the change.

304.4.1 A competitor will retain their IPCSB points if they change their NPC under the condition that the former NPC granted the release of the competitor.

304.4.2 In the event that any of the documents for an application to change licence registration submitted by the NPC (letter of release from the former NPC, passport, residency papers) are found to be false, IPCSB will sanction the competitor and the new NPC.

304.5 To compete at IPCSB Events,

An athlete must be IPCSB classified. Until an athlete has been IPCSB classified, he/she will be designated N status (New), and can only compete in:

IPC Snowboard competitions levels: 2, 3.

An athlete with N Status must compete in the highest class of his/her category (*)

An “N” status athlete has one (1) year to obtain the IPCSB international classification from the first race he competes. Results achieved throughout that period will not be recalculated.

304.6 By signing the Athlete Eligibility Code Form, the athlete confirms possession of valid liability insurance for IPCSB events and assumes full responsibility, through his/her National Paralympic Committee.

304.7 The IPCSB Licence will only be issued to athletes who meet the requirements of the IPC Athlete Nationality Code.

304.8 The IPCSB Licence will only be issued to athletes who meet the requirements of the IPC Snowboard minimum age limit requirements as follows.

304.9 In order to be eligible to compete in IPCSB Competitions, the competitors must comply with the regulations of section 304 and the following admitted years of birth:

IPCSB Competition Year	16/17	17/18	18/19	19/20
Minimum Age (Level 2 and 3)	2003	2004	2005	2006
Minimum Age (Level 0 and 1)	2002	2003	2004	2005

304.10 Youth competitors 13 to 17 may compete at a NC event if they have either an IPCSB or NCP licence. These competitors will be expected to follow NC race entry requirements, as outlined in 311.2.

304.11 An athlete whose licence has been suspended may have a new licence issued only after IPC Alpine Skiing and Snowboard has verified that any sanctions imposed have been fulfilled.

304.12 Application for a change of IPCSB Licence Registration

Refer to the IPC Handbook Athlete Nationality Policy

http://www.paralympic.org/sites/default/files/document/120203163705284_sec_ii_chapter_3_1_ipc_policy_on_the_nationality_of_competitors_gb_approved.pdf

304.13 Sex of the Competitor

304.13.1 Subject to article 304.13.3 below, an athlete shall be eligible to compete in men’s competition if he is:

- recognised as a male in law; and
- eligible to compete under these IPCSB Rules and Regulations.

304.13.2 Subject to article 304.13.3 below, an athlete shall be eligible to compete in women’s competition if she is:

- recognised as a female in law; and
- eligible to compete under these IPCSB Rules and Regulations.

304.13.3 IPCSB will deal with any cases involving transgender athletes in accordance with the International Olympic Committee's (IOC) transgender guidelines (as amended by the IOC from time to time) and any applicable IPCSB regulations.

304.13.4 The eligibility of persons recognised as third gender in law will be determined by the IPC on a case-by-case basis, in accordance with any applicable IPCSB regulations.

305 Race Licence Pre-requisites

IPCSB shall not issue a licence to any athlete who:

305.1 Has conducted his or herself in a manner that violates the principles of Fair Play[1];

305.2 Accepts or has accepted, directly or indirectly, any money / payments for their participation at competitions;

305.3 Has not signed the Athlete Eligibility Code Form;

305.4 Does not meet the conditions outlined in the IPC Nationality Code or age limit requirement outlined in regulation 304.9 and 304.10,

305.5 Is under suspension.

305.6 With the issuance of a licence and race entry the National Paralympic Committee assumes full responsibility and confirms that valid insurance (as per regulation 304.3) for training and competition is in place for all its athletes.

306 Competitor's Obligations and Rights

306.1 Athletes must comply with the IPC Handbook, the IPC Snowboard Rule and Regulation Book and must comply with the instructions of the Jury.

306.2 Competitor are not permitted to compete while under the influence of any substances or methods prohibited by the IPC Anti-Doping Code[2].

306.3 Competitor who do not attend the award ceremonies without prior notification, lose their claim to any prize granted including money prizes.

306.4 Competitor must behave in an appropriate and sportsmanlike manner towards members of the Organising Committee, officials and the public.

306.5 Competitor are prohibited from betting on the outcome of competitions in which they are participating.

[1] Change made on 9th December 2014 to reflect the adoption of the 2015 IPC Anti-Doping Code

[2] Change made on 9th December 2014 to reflect the adoption of the 2015 IPC Anti-Doping Code

307 Sponsorships and Advertising

307.1 Teams may enter into contracts with a commercial firm or organisation for financial sponsorship and or the supply of goods or equipment.

Paralympic Winter Games and World Championships have specific regulations that all NPCs must comply with.

307.2 Competitors are forbidden to display any advertising of brands related to tobacco, alcohol products or drugs (narcotics).

308 Display of Competition Equipment

308.1 Competitors are not permitted to take off snowboard before crossing the red/blue line in the finish area, as defined by the organiser.

308.2 A competitor is not allowed to take equipment (snowboard, boots, helmet, goggles) to the official ceremonies that have anthems and/or flag raising for Level 0 events (PWG/WCH/WC). Holding or carrying equipment on the victory podium after conclusion of the whole ceremony for press photos, pictures, etc. is permitted.

309 Organisation of Competition

309.1 The Organiser

309.1.1 The organiser of an IPCSB competition is the person or group of people who make the necessary preparations and directly carry out the running of the competition in the resort.

309.1.2 The organiser must ensure that accredited persons accept the regulations regarding the competition rules and Jury decisions.

309.2 The Organising Committee

The Organising Committee of an IPC Snowboard competition consists of those members (physical or legal) who are designated by the contracted party supplying the race service and approved by IPCSB. It carries the rights, duties and obligations of the organiser.

309.3 Liability Insurance

309.3.1 The organizer must sign into a liability and accident insurance for all staff (IPCSB Personnel included), including volunteers, all other accredited staff and athletes and visitors to protect the LOC against any claim related to the activities of the Organising Committee. IPCSB will additionally cover its employees and appointed officials, who are not members of the Organising Committee (e.g. TD, administrator personnel, medical supervisor, etc.), with liability insurance when they are acting on behalf of IPCSB. Despite this coverage during the event, IPCSB and IPC staff is considered part of the LOC staff and the insurance coverage only will apply if the LOC insurance will decline a potential claim.

309.3.2 Before the first training day or competition, the organiser must be in possession of a binder or cover notes issued by a recognised insurance company and present it to the Technical Delegate. The Organising Committee requires liability insurance with coverage of at least €700,000; whereby it is recommended that this sum is at least €2 million. Additionally, the policy must explicitly include liability insurance claims by any accredited participant, including athletes, against any other participant including but not limited to officials, course workers, coaches, etc.

310 Invitation/Programme

The Invitation/Programme (according to the standard template provided by IPCSB) must be approved and published by IPCSB, and must include:

310.1 Name, date and place of the competitions, together with information on the competition sites and the best ways of reaching them,

310.2 Technical data on the individual competitions and conditions for participation,

310.3 Names of principal officials with contact details (phone/e.mail)

310.4 Time and place for the first team captains meeting and the draw,

310.5 Timetable for the beginning of the official training and the start times,

310.6 Location of the official notice board,

310.7 Time and place for the prize giving,

310.8 Final date of entry and address for entries, including telephone, fax and e-mail address.

310.9 Download draft invitation from http://www.paralympic.org/alpine-skiing/downloads

311 Competition Administration and Fee Regulations (Athletes and Organising Committees)

IPC Alpine Skiing and Snowboard recommends the organiser invoice up to 30% of the total participation fee for payment one month prior to the event's opening date. Failure to pay this amount by the deadline will result in cancellation of the non-paying team's registration.

The LOC is responsible for complying with the aforementioned clause.

311.1 **Standard services for LOC accommodation**

If the LOC provides accommodation the standard services must comprise the following:

- Double room in a minimum of three star hotel style accommodations (half board).
- A number of wheelchair accessible rooms, calculated at a minimum of 15% of the total number of entries
- Waxing rooms:

– The organizer must make available a wheelchair accessible heated room/space with enough space for a wheelchair to turn and manoeuvre and for storing equipment. The waxing rooms must be sufficiently ventilated. These rooms should have a minimum height of 2.4 metres, and for total area provided, 2 square metres ($2m^2$) per athlete.

The LOC is responsible for complying with this clause.

311.2 **Race Entry Fee (Athletes)**

The race entry fee is the amount that must be paid per athlete to the LOC for each race, including the official snowboard training day, specified on the programme.

The race entry fee is non-refundable provided the Jury cancels the race.

COMPETITION TYPE	RACE FEE AMOUNT
Paralympic Winter Games	N/A
IPC Snowboard World Championships	According to IPC Competition Fee
Giant Slalom	15€
Banked Slalom	30 €
Snowboard Cross	30 €

311.3 Competition sanction fee (Organizing Committee)

An Organising Committee must pay all competition sanction fees to IPC Alpine Skiing and Snowboard according to the terms and conditions of the contract/agreement.

These competition sanction fees are non-refundable.

The fees for each type of race are as follows:

COMPETITION TYPE	FEE PER RACE
Paralympic Winter Games	N/A
IPCSB World Championships	As determined by IPC
WORLD CUP	500 €

CONTINENTAL CUP	300 €
GIANT SLALOM	150 €

The official Snowboard training runs will be invoiced accordingly to the competition level.

312 Competition Entries

312.1 Each NPC/NSF must comply with the online entries and accommodation entry according to the dates published on the corresponding competition invitation.

312.2 At the request of the LOC, the IPCSB Race Administrator will cancel a competitor's entry in a race/event if at the second team captains' meeting his/her delegation has not covered the full costs of that competitor's participation.

312.3 IPCSB management will send to the LOC or race administrator two days prior to the competition the official document with the race entries.

Special entry timelines and procedures shall apply for the Paralympic Winter Games and World Championships.

312.4 National Paralympics Committees and authorised National Ski Federations are not permitted to enter the same competitors in more than one competition on the same date. A monetary sanction will be applied to the NPC/NSF.

312.5 All competitors, trainers and team officials participating in IPCSB events must carry accident insurance, in sufficient amounts to cover accident, transport and rescue costs including race risks, as well as third party liability insurance. The NPC/NSF is responsible for adequate insurance coverage of all the competitors they license and enter into an IPCSB race or event.

312.6 The NPC/NSF trainers and team officials must be able to show proof of the respective insurance coverage at any time on request of IPCSB, one of its representatives or the organizing committee.

312.7 Only National Paralympic Committees and/or authorised National Ski Federations are entitled to submit entries for IPCSB Races.

Athlete race registration must be done through the IPCSB on-line entry system http://www.paralympic.org/sdms/ebs/login.php

312.8 The LOC and IPCSB may reject any entry/entries that do not comply with IPCSB Rules and Regulations

312.9 Race Entries Deadlines

WC/EC/NORAM

- Entries by number open 12 weeks prior to the event

- Entries by number close 6 weeks prior to the event
- Entries by name open 5 weeks prior to the event
- Entries by name closed 1 week prior to the event
- Wild card open 2 weeks prior to the event
- Wild card close 1 week prior to the event

IPCSB/NC

- Entries by name open 3 weeks prior to the event
- Entries by name close 1 week prior to the event

For WCH and Games based on Qualification criteria

313 Team Captains Meetings

313.1 The time and location of the first team captains meeting and of the draw must be published in the invitation/programme. The invitations for all other meetings have to be announced to the team captains at their first meeting.

313.2 Two representatives of each participating nation may attend the TCMs.

313.3 Representation by a substitute from another nation during discussions/voting at team captains meetings is not allowed.

313.4 Team captains and coaches must comply with the IPCSB Rules and Regulations, the decisions of the Jury and respect the IPC Code of Ethics.

http://www.paralympic.org/sites/default/files/document/130625114507663_IPC+Code+of+Ethics.pdf

314 Draw

314.1 Competitors' starting order for each event and each discipline is decided by random draw or IPCSB points order and IPCSB points order.

314.2 If a competitor is not represented at the draw by a team captain or trainer, they will only be drawn if their participation is confirmed by telephone, e-mail or fax to the LOC by the beginning of the team captains meeting.

314.3 The TD in his report must name the draw competitors not present during the competition, indicating if possible the reasons for absence.

314.4 If a competition has to be postponed by at least one day, the draw must be done again.

315 Start List/Publication of Results

315.1 For all IPCSB races, the LOC must provide the means to enable start lists and results distribution from the venue results room to the start area and for all gatekeepers/gate judges.

In the venue timing/results room, access to internet (at least DSL speed) and printer/photocopier (and its drivers) is required for World Cup, World Championships and Paralympic Games.

315.2 The start lists and results will be distributed on paper to all teams, officials, race office, sports presentation, protocol responsible person and media.

315.3 **Unofficial Times**

They should be posted on a scoreboard, which should be readily visible from the area provided for the competitors who have finished, and from the press area. Whenever possible, unofficial times should be announced to the public over loudspeakers.

315.4 **Announcement of Disqualifications**

After completion of the race disqualifications must be published on the official notice board and also at the finish. The time limit for protest is counted from the moment of this announcement.

316 Competitor Medical Examinations and Compliance with the IPC Anti-Doping Code

316.1 The National Paralympic Committee and the authorised organisations are responsible for the fitness of their competitors to race. All competitors are required to undergo a thorough evaluation of their medical health. This evaluation is to be conducted within the competitor's own nation.

316.2 All Competitors, Guides and each Athlete Support Personnel who participate in any of the Events or Competitions as coach, trainer, manager, Team staff, official, medical or paramedical personnel must comply with and are subject to the rules and regulations outlined in the IPC Anti-Doping Code (the “Code”) as a condition of their membership, accreditation and/or participation in the sport. The IPC Anti-Doping Code can be found in the IPC Handbook Section 2, Chapter 1.2: http://www.paralympic.org/the-ipc/handbook. Any conflict between the Code and these rules will be resolved in favour of the Code[3].

317 Medical Services Required from Event Organisers

The health and safety of all those involved in an IPCSB competition is a primary responsibility of all event organisers. This includes the competitors as well as race officials, volunteers, course workers and spectators.

The specific composition of the medical support system is dependent on several variables:

- The size and level of the event being held (World Championships, World Cup, Continental Cup, NC, IPCSB level, etc.)

[3] Change made on 9th December 2014 to reflect the adoption of the 2015 IPC Anti-Doping Code

- The estimated number of competitors, support staff and spectators
- The scope of responsibility for the Event Medical Organisation (competitors, support staff, spectators) should also be determined.

The Organiser/The Chief of Medical and Rescue Services must confirm with the race Director and the technical delegate that the required rescue facilities are in place before starting the official training or competition. In the event of an incident, all services must be in place before restarting the official training or competition. Refer to the IPC Handbook, Medical Code.

http://www.paralympic.org/sites/default/files/document/120131082554885_ipc+medical+code_final.pdf

318 Competition Equipment

A competitor may only take part in a competition on the IPC Snowboard Calendar with equipment that complies with the IPCSB Equipment Rule Book. In addition refer to the IPC Handbook, Sport Equipment Policy

http://www.paralympic.org/sites/default/files/document/120203164107739_sec_ii_chapter_3.10_ipc_sport_equipment_policy.pdf

318.1 A competitor is responsible for the competition equipment and adaptive equipment they use. It is each competitor's responsibility to check that the equipment they use conforms to the specifications and general safety requirements and is in working order.

318.2 The term "Competition Equipment" encompasses all manufactured equipment that is specified in the IPCSB Equipment Rule Book.

318.3 The term "Adaptive Equipment" refers to all the implements and apparatus adapted to the special needs of Paralympic athletes and used by athletes during competition on the field of play (e.g. sit-ski, protections, prostheses and orthoses) that is specified in the IPC Snowboard Equipment Rule Book.

318.4 IPC Alpine Skiing and Snowboard must approve the new adaptive equipment

The new adaptive equipment must be submitted in writing with supporting technical documentation and photographs and the approval form to be downloaded from http://www.ipc-alpineskiing.org/Downloads/.

The new adaptive equipment must be sent to the IPC Alpine Skiing and Snowboard for approval one month prior to be used in a competition (ipcalpineskiing@paralympic.org).

The new adaptive equipment to be used in PWG and WCH must be submitted by September 30 prior to the competition season in which equipment is going to be used.

318.5 The IPC Alpine Skiing and Snowboard does not take any responsibility for the approval of new technical developments, which at the time of introduction may contain unknown dangers to the health or cause an increase in the risk of accidents.

318.6 **Advertising on Competition Equipment**

The advertising on equipment that is used during IPC Paralympic Winter Games and World Championships must conform to the IPC Manufacturing and Trademark Guidelines. Please refer to Manufacturing and Trademark Guidelines for PWG and WCH.

318.7 Obscene names and/or symbols on clothing and equipment are forbidden.

319 Equipment Controls

319.1 IPC Alpine Skiing and Snowboard has full authority to control equipment. An official IPCSB designated Equipment Controller will carry out equipment controls. Should there be a violation of equipment regulations, the Jury will determine the appropriate sanction.

319.2 In the absence of equipment controllers, equipment issues are to be dealt with by the Jury.

320 Gambling and Competitions

Competitors, coaches, team officials and technical officials are prohibited from betting on the outcome of competitions in which they are involved.

321 Sanctions

321.1 **General Conditions**

321.1.2 An offence for which a sanction may apply and a penalty be imposed is defined as conduct that:

- is in violation or non-observance of these IPCSB Rules and Regulations;
- constitutes non-compliance with directives of the Jury or individual members of the Jury; and/or
- constitutes unsportsmanlike behaviour.

The following conduct shall also be considered an offence:

- attempting to commit an offence;
- causing or facilitating others to commit an offence; and/or
- counselling others to commit an offence.

321.1.3 In determining whether conduct constitutes an offence consideration should be given to:

- whether the conduct was intentional or unintentional; and/or
- whether the conduct arose from circumstances of an emergency.

321.1.4 All NPCs or approved NSFs, shall accept and acknowledge these rules and sanctions imposed, subject only to the right to appeal pursuant to these IPCSB Rule and Regulations and any relevant provision in the IPC Handbook.

321.2 **Applicability**

321.2.1 These sanctions apply to:

- all persons who are accredited by the IPCSB or the organiser for an event published in the IPCSB calendar (an event) both within and outside the confines of the competition area and any location connected with the competition; and
- all persons who are not accredited, within the confines of the competition area; and
- the group (trade team, team, national federation, etc.) to which the offender belongs and to its other members.

321.3 **Penalties**

321.3.1 The commission of an offence may subject a person or athlete/guide to the following penalties:

- Reprimand - written or verbal
- Withdrawal of accreditation
- Denial of accreditation
- Monetary fine not less than 80€

—

- Disqualification
- Impairment of their starting position
- Forfeiture of prizes and benefits in favour of the organiser
- Suspension from IPC events

—

321.3.2 All IPC members or approved NSFs are liable to IPCSB for the payment of any fines and incurred administrative expenses imposed on persons whose registration they arranged.

321.3.3 Payment of fines is due to IPCSB within 8 (eight) days following their imposition.

321.3.4 A competitor shall only be disqualified if his mistake would result in an advantage for him with regard to the end result, unless the rules state otherwise in an individual case.

321.3.5 A Jury has the authority to impose penalties including monetary fines for field of play breaches of these IPCSB Rules and Regulations. The Jury may not impose a monetary fine of more than 500 €.

321.3.6 IPCSB has the authority to impose penalties for outside the field of play breaches of these IPCSB Regulations and Rules including monetary fines.

321.4 **The following Penalty decisions may be given verbally:**

- Reprimands (provided they are recorded in writing)
- The withdrawal of accreditation for the current event from persons who had not been registered with the organiser through their NPCs or NSFs (provided the reasons for such withdrawal are subsequently provided in writing)

321.5 **The following Penalty decisions shall be in writing:**

- Monetary fines
- Disqualification
- Impaired starting position
- Competition suspensions
- Withdrawal of accreditation from persons who had been registered through their NPCs and NSFs Withdrawal of accreditation of IPCSB/IPC accredited persons
- Forfeiture of prizes and benefits in favour of the organiser

321.6 Written penalty decisions must be sent by the IPCSB TD to: the IPCSB mailbox ipcalpineskiing@paralympic.org , to the offender, and (if applicable) to the offender's NPC and/or the NSF.

321.7 Any sanction involving disqualification shall be recorded in the referee's and/or the TD's report.

321.8 All penalties shall be recorded in the TD's report.

322 Procedural Guidelines

322.1 **Competence of Jury**

The Jury at the event has the right to impose sanctions according to the above rules by majority vote. In the case of a tie, the chair of the Jury has the deciding vote.

322.2 **All written Penalty decisions shall include:**

322.3 The offence alleged to have been committed

322.4 The evidence of the offence

322.5 The rule(s) or Jury directives that have been violated

322.6 The penalty imposed

322.7 The penalty shall be appropriate to the offence. The scope of any penalty imposed by the Jury must consider any mitigating and aggravating circumstances.

322.8 **Remedies**

322..1 A penalty decision of the Jury may be appealed in accordance with the provisions in these IPCSB Rules and Regulations.

322.8.2 If an appeal is not filed within the deadline established in these IPCSB Rules and Regulations, the penalty decision of the Jury becomes final.

322.9 **Benefit Fund**

All monetary fines will be paid to the IPCSB account for the development of the sport.

323 Protests

Types of Protests

323.1 Against admittance of competitors or their competition equipment,

323.2 Against the course or its condition,

323.3 Against a competitor or against an official during the race,

323.4 Against disqualifications,

323.5 Against timekeeping,

323.6 Against instructions or decisions of the Jury.

324 Place of Submission

324.1 Protests must be submitted to the Jury at the location designated and announced at the team captains' meeting held prior to each event.

325 Deadlines for Submission

325.1 **Against the admittance of a competitor:**

- before the draw.

325.2 **Against the course or its condition:**

- at least 60 minutes before the competition starts

325.3 **Against competitor or competitor's equipment or against an official because of irregular behaviour during the competition:**

- within 15 minutes after the last competitor has passed the finish.
- for Snowboard before the next run begins.

325.4 **Against disqualification:**

- within 15 minutes after the posting or announcement of the disqualification.

325.5 **Against the timekeeping:**

- within 15 minutes after the posting of the unofficial result list.

325.6 **Against all instructions or decisions of the Jury:**

- immediately and within 15 minutes after the last competitor has passed the finish.

326 Form of Protests

326.1 A Jury only must accept a protest that demonstrates merit by including credible evidence.

Specific event-related IPC media policies apply for the PWG and WCH regarding personal photography and filming of athletes during such competitions and whether or not the use of such photographs and video footage shall be permitted as evidence to defend a protest. For all other events, the use of personal photographs and video footage is admissible as evidence and may be relied on to lodge or defend a protest.

326.2 All Jury decisions are final except those that may be protested or appealed in accordance with these IPCSB Rules and Regulations.

326.3 Protests must be submitted in writing to the Jury.

326.4 As exceptions, protests defined under art. 321.4 (made verbally), can be made verbally

327 **Protest Fees**

327.1 EUR 100 (or the equivalent in another valid currency) must be deposited with each protest. This deposit will be refunded if the protest is upheld. Otherwise, the funds will go to the IPCSB account and used for the development of the sport.

327.2 A protest may be withdrawn by the protesting party before the publication of a decision by the Jury. In this case, the deposit must be refunded.

327.3 Protests not submitted in time or in the correct manner or submitted without the protest fee will not be considered.

328 Authorisation

The following representatives are authorized to submit protests:

- the NPC or authorized NSF
- the Head Coach or his/her representative.

329 Settlement of Protests by the Jury

329.1 The Jury meets to deal with the protests at a predetermined place and time fixed and announced by it.

329.2 In dealing with a protest against disqualification the gate judge and, if needed, also the gate judge of the adjacent gate combinations or other involved officials, the competitor in question and the protesting team captain or trainer must be invited to attend the Jury hearing by the TD or Referee. The Jury will consider all the available and relevant information.

329.3 At the vote on the protest, only the Jury members are to be present. The IPCSB Race Director chairs the proceedings. Minutes of the proceedings are to be kept and signed by all voting members of the Jury. The decision requires a majority of all voting members of the Jury, not just of those present. In case of a tie, the IPCSB Race Director vote is decisive. Where an IPCSB Race Director appointment is not in place, the TD assumes these responsibilities.

329.4 The decision is to be made public immediately after the proceedings are completed.

330 Appeals

330.1 **Board of Appeal**

330.1.1 There shall be established a Standing Board of Appeal (Standing BoA) that will be composed of 5 members appointed by the STC Snowboard. The Standing BoA will be appointed during the spring meeting of the STC for the following competition season.

330.1.2 For each competition (PWG, WHCs and WCs) 3 members of the Standing BoA will be nominated by IPCSB (or for the PWG, by the IPC) to act as the BoA. Following receipt of a Notice of Appeal, the IPC Sport Staff will advise the BoA of that fact and will copy the Notice to all BoA members.

330.1.3 No person shall sit on an BoA to hear an Appeal if the circumstances of the Appeal are such that they may have a conflict of interest or may reasonably be seen as having a conflict or otherwise biased either for or against the Appellant, or where they have been involved in the decision being appealed, including as a witness.

330.1.4 The IPC Appointed Sport Staff person should advise all parties of the identity of the BoA members, and the email address for communication with the BoA as soon the notice has been circulated to the BoA.

330.2 **Right of Appeal**

330.2.1 Any sanction not related to the field of play may be appealed to the BoA and shall do so by filing with the IPCSB Appointed Sport Staff person a written Notice of Appeal within 2 hours of the first notification of the decision being appealed.

330.3 Notice of Appeal

330.3.1 The Notice of Appeal must be endorsed by the Appellant's NPC or NSF (assuming the Appellant is not such a body, in which case they will be required to sign in their capacity as Appellant) and must set out in full the grounds of the appeal, and evidence to be relied on and the legal and other arguments in support of the Appeal. The Notice must contain the appellants email contact and/or mobile or other telephone contact number and must be dated and signed by the Appellant.

330.3.2 Upon receipt, the BoA shall immediately conduct a review of the Notice of Appeal to determine whether the content, timing and delivery of the Notice of Appeal comply with these IPCSB Rules and Regulations.

330.3.3 If the Notice of Appeal does not comply with these IPCSB Rules and Regulations the BoA shall be entitled to dismiss the Appeal and if it does so it will notify the Appellant of its decision as soon as possible, which may be verbally or in writing. In this circumstance a fresh Notice of Appeal can be made within the applicable time limit for bringing appeals.

330.3.4 If the Notice of Appeal complies with these IPCSB Rules and Regulations then the Appeal will be forwarded to the Chair of the Jury that made the decision under Appeal and any other party considered by the BoA to be relevant and affected by the Appeal. The Chair of the Jury and all affected parties shall be asked to submit a response to the Notice of Appeal within 12 hours.

330.4 Appeal procedures

330.4.1 The Appeal should normally be decided within 24 hours of receipt of the Notice of Appeal.

330.4.2 All Appeals and responses must be submitted in writing in English, including any evidence the parties intend to offer in support of or in response to the Appeal.

330.4.3 The BoA shall decide on the location and detailed procedure for the Appeal.

330.4.4 The BoA members are required to respect the confidentiality of the Appeal until the decision is made public and to consult only with the other members of the BoA during the deliberations. The BoA will publish the decision once it is made

330.4.5 The Appellant must cover the cost of 750€ (or equivalent currency) when submitting the Notice of Appeal to the IPCSB Staff person. The Appellant will be responsible for any additional costs if the Appeal is lost.

330.4.6 Decisions of the BoA may be announced orally at the conclusion of the hearing and shall take effect from that time. The written decision, together with its reasoning, will be delivered to the parties involved, their NPC or authorized NSF and all members of the Jury whose decision was appealed as soon as possible following the hearing of the Appeal.

330.4.7 There shall be no further appeal or challenge to a decision of the BoA, which shall be considered final and binding on all parties including the IPC and IPCSB.

330.4.8 Other than in respect of the time limits set out, any failure of any party to follow the procedural requirements will not invalidate the decision of the BoA unless in the opinion of the BoA the failure had a material effect on the decision that was made, or renders the decision unfair in some material respect.

Section 2: Rules common to All Snowboard Disciplines

For the technical organisation of the Paralympic Winter Games and IPC Snowboard World Championships the IPC Handbook is mandatory.

1300 Race organisation and management

Reference is made to article 309

1300.1 The Organizing Committee consists of those members (physical or legal) who are delegated by the organiser and by IPCSB. It carries the rights, duties and obligations of the organiser.

1300.2 Appointments by IPC Alpine Skiing

1300.2.1 IPC Snowboard Race Director

The IPC Snowboard RD is the authority representing IPC Snowboard at all World Cup, WCH and Paralympic Games alpine skiing events. The IPC Snowboard RD may represent the sport at lower level events, such as Continental Cup races, but this will be determined on a case-by-case basis, with direction from IPC Alpine Skiing and Snowboard.

The IPC Snowboard Race Director reports to IPC Alpine Skiing and Snowboard about the specific activities related to the IPCSB events for which they have responsibility.

1300.2.1.1 Duties, rights and responsibilities

1300.2.1.2 Pre-Event

- Conducts site inspections prior to the event as determined by IPC Alpine Skiing and Snowboard
- Verifies the course with the TD and in a “force majeure” course change situation works with the TD and Chief of Course to choose an appropriate alternate slope
- Ensures all Technical Requirements (for both training and competition) and all contract provisions are implemented in a timely fashion by the Local Organizing Committee (LOC) both prior to and during the event/competition
- Ensure SDMS downloads are prepared for Team Captains’ Meetings (TCM)
- Ensure assigned National Anti Doping Organization (NADO) individuals are aware of event plan and logistics
- Ensure that arrangements have been made with the Head of Classification for events that will also host Athlete Classification, as to what requirements will be necessary at the event
- Ensure that Equipment Testing logistics are arranged at events in which the RD is required to provide this function in place of the assigned STC Member
- Ensures that the Technical Delegate (TD) has all information required regarding the IPC Snowboard Rules and Regulations, and any other documentation as requested or believed required by the TD

- Communicates with the TD and the Chief of Course prior to the event and works closely with them during the event
- Liaise with all IPC Alpine Skiing and Snowboard STC members as required
- Liaise with the OC to ensure they have the login details to post entries prior to the competition
- The IPC Snowboard RD will work with the IPC Alpine Skiing and Snowboard STC and IPC Head of Snow Sports, the OC and event sponsors (where applicable) in ensuring that event sponsors are fully supported with respect to contract expectations for the event
- To assist in determining opportunities and securing of sponsorship potential for the sport

1300.2.1.3 During Events

- Advocates for the athletes' safety by ensuring that all aspects of safety and fair play have been adhered to throughout the entire event

- Will work closely with the Jury throughout the event to ensure the safety and fairness of the event

- Listens to input from coaches (as athlete spokespersons), which occurs only through representatives of the CAG on issues that may arise during an event; and communicates with the jury to determine the outcome to be applied in all aspects of the event on-site

- Must be part of all jury inspections before a course is deemed open for inspection

- Chairs the Jury and can also assume the role of the Referee at IPCSB sanctioned events

- Conducts and chairs the Team Captains meetings

- Works with the nominated course setter for speed events in a collaborative fashion

- Supervises the complete execution of the race from course preparation during the event, course setting through to completion of the event when the last competitor has finished
- Ensures that all decisions are made collaboratively as the event jury, and communicates the outcomes of jury decisions in a timely fashion through a representative of the CAG (Connection Coach)
- Liaise with all IPC Alpine Skiing and Snowboard STC members as required
- Has to have a full understanding of the IPCSB software and supervise its correct use and assist in solving problems that may arise from OVR production (on venue results)
- Ensure that Adaptive Equipment meets the Field of Play (FOP) Rules
- Ensures that race results have been confirmed by the TD and correctly

submitted to IPC Alpine Skiing and Snowboard Headquarters in a timely manner
- Prepares and submits a post-event reports to the IPCSB STC that outlines pre-event and event summaries, highlighting areas requiring improvement for the future competitions in the present competition season (this includes any recommendations relating to the IPC Snowboard Rules and Regulations)
- Once the event TD has signed the official results, upload the PDF results to the IPCSB official webpage and FIS webpage
- The IPCSB RD will work with the IPC Alpine Skiing and Snowboard STC and IPC Head of Snow Sports and the OC to ensure that sponsor expectations are being met at the event

1300.2.1.4 Post Event
- Work together with the STC during the process of long-term competition calendar planning for all IPC Snowboard competitions in collaboration with IPCSB Head of Snow Sports and IPCSB STC
- Liaise with all IPC Alpine Skiing and Snowboard STC members as required
- Gather feedback on the completed event from the CAG and Athletes' Representative
- Prepares and submits a post-season report to the IPCSB STC that outlines pre-event and event summaries, highlighting areas requiring improvement for the future competition season (this includes any recommendations relating to the IPCSB Snowboard Rules and Regulations)
-The IPC Snowboard RD will work with the OC to prepare a post-event report on sponsorship promotion, placement and success, including direct feedback from sponsors on their perception of the events

1300.2.1.5 In IPCSB races in which the IPC Snowboard Race Director is not present, the TD and Jury assume the duties, rights and responsibilities of the IPC Snowboard Race Director (that relate directly to the event).

1300.2.2 In IPCSB World Cup and Continental Cup Races

- the IPCSB Snowboard Race Director
- the TD
- the finish referee
- the course builder

1300.1.2 For Paralympic Winter Games and IPCSB World Championships

- all Jury members

1300.1.3 In all other level of IPCSB races where the IPCSB Race Director is not present the Technical Delegate appoints:

- the referee

1300.1.4 By these appointments the above persons become members of the Organising Committee.

1300.2 **Appointments by the organiser**

The organiser appoints all other members of the Local Organising Committee. The chairman or his representative represents the committee in public, leads the meetings and makes decisions concerning all matters that are not made by other persons or groups. Before, during and after the competition he works closely with the IPCSB STC and their appointed officials. He takes on all other duties that are necessary for carrying out the competition.

The following officials must be appointed:

1300.2.1 *The Chief of Competition*

The Chief of Race directs all preparation of the competition and supervises the activities in the technical area. He summons meetings for consideration of technical questions and leads the team captains' meetings after consultation with the Technical Delegate.

1300.2.2 *The Chief of Course*

The chief of course is responsible for the preparation of the courses in accordance with the directives and decisions of the Jury. He must be familiar with local snow conditions on the terrain concerned. In case course builder is appointed Chief of Course may assist Course Builder in course building and maintenance

1300.2.3 *The Start Referee*

The start referee must remain at the start from the beginning of the official inspection time until the end of a training/event.

- He makes sure that the regulations for the start and the start organisation are properly observed.
- He determines late and false starts.
- He must be able to communicate immediately with the Jury at all times
- He reports to the referee the names of the competitors who did not start and informs the Jury of all infringements against the rules, such as false or delayed starts or violations against the rules for equipment.
- He must ensure that reserve bibs are at the start.

1300.2.4 *The Finish Referee*

The Finish Referee must remain at the finish from the beginning of the official inspection time until the end of a training/event throughout the training and the race.

- He makes sure that all the regulations for the organisation of the finish and the finish in-run and out-run are properly observed.

- He supervises the finish controller, the timing and the crowd control in the finish area.

- He must be able to communicate immediately with the Jury at all times.

- He reports the names of the competitors who did not finish to the Referee and informs the Jury of all infringements against the rules.

1300.2.5 *The Chief of Finish*

The Chief of Finish is responsible for the organisation and supervision of the finish area and the finish line Judges. The Chief of Finish will accept protests in the finish area. The Chief of Finish must report all protests immediately to the other jury members.

1300.2.4 *The Finish Referee*

The Finish Referee must remain at the finish from the beginning of the official inspection time until the end of a training/event throughout the training and the race.

- He makes sure that all the regulations for the organisation of the finish and the finish in-run and out-run are properly observed.

- He supervises the finish controller, the timing and the crowd control in the finish area.

- He must be able to communicate immediately with the Jury at all times.

- He reports the names of the competitors who did not finish to the Referee and informs the Jury of all infringements against the rules.

1300.2.6 *The Chief of Timing and Calculations*

The Chief of Timing and Calculations is responsible for the coordination of officials at the start and finish, including timing and calculations. The following officials are under his direction:

- starter

- assistant starter

- start recorder

- chief timekeeper

- assistant timekeepers

- finish controller

- chief of calculations and his assistants

1300.2.7 The Chief Gate Judge

The chief gate judge organises and supervises the work of the gate Judges.

He designates the gates each will supervise and places them in position.

At the end of the 1st run and the end of the competition he will collect the gate Judges control cards for delivery to the referee. He must distribute, in good time, to each gate judge the material that they need (control card, pencil, start list, etc.) and be prepared to offer assistance either to help keep the spectators off the course or to help maintain the course, etc.

He must make sure that the numbering and the marking of the gates is done within the required time.

1300.2.8 The Gate Judges

A gate judge will be responsible for the supervision of one or more gates.

A gate judge must observe accurately whether the passage of the competitor was correct through his area of observation. He must also fulfil a number of other important functions, all of which are described in detail under article 1304.

1300.2.9 *The Race Secretary*

The race secretary is responsible for all secretarial work for the technical aspects of the competition and amongst others for the preparation of the draw. He is responsible for the minutes of the technical officials, the Jury and team captains' meetings.

He ensures that all forms for start, finish, timing, calculations, and gate- judging are well prepared, and handed over to the officials concerned in good order at the proper time. He receives official protests and gives them to those who are concerned. He facilitates the calculation of results by appropriate preparation and ensures that they are duplicated and published as quickly as possible after the completion of the competition.

1300.2.10 *The Chief of Medical and Rescue Services*

The Chief of Medical and Rescue Services is responsible for organising adequate first aid and medical coverage during the official training periods and the actual competition.

He must arrange an appropriate facility to which injured competitors should be taken and treated.

He coordinates plans with the team doctors before the start of the official training or the start of any competition.

During training and the races he must be in telephone or radio communication with his assistants. He must co-ordinate plans with the Chief of Race before the start of the official training, or start of any competition.

A doctor, who should be a good skier, should be ready at the start to deal with any eventuality and must stay in contact with the Jury and the members of the rescue service. This task can be delegated to a team doctor.

1300.2.11 *The IPCSB OVR Race Administrator*

IPC Alpine Skiing appoints the IPCSB OVR race administrator.

He is responsible for:

- on-venue results, scoring and all printed documents,

- the communication between timer and race director.

1301 The Jury

The following members of the Jury are responsible for technical matters within the closed competition areas:

- the Technical Delegate
- the IPCSB Race Director
- the Referee
- the Chief of Competition
- the Start Referee
- the Finish Referee
- the Video Controller (Only for PWG/WCH/WC)
- the IPCSB OVR Race Administrator (Only for PWG/WCH/WC)
- COURSE BUILDER OR TECHNICAL ADVISOR

1301.1 Appointment by the IPC Alpine Skiing and Snowboard of the Jury for Paralympic Winter Games

- the Technical Delegate(s)
- the IPCSB Race Director
- the Referee
- the Chief of Competition
- the Start Referee
- the Finish Referee
- the Video Controller
- the IPCSB OVR Race Administrator (non – voting rights)
- the Equipment controller (non – voting rights)

The Jury should include one lady if possible.

1301.2 **Appointment by IPC Alpine Skiing and Snowboard of the Jury for International Competitions**

- the Technical Delegate(s) (WCH-WC-EC)

- the IPCSB Race Director (WCH-WC-EC)
- the Referee (WCH-WC-EC)
- the Finish Referee (WCH-WC-EC)
- COURSE BUILDER OR TECHNICAL ADVISOR (non-voting rights)

1301.3 All Jury members must communicate in the IPC official language, English.

1302 Roles of the Jury

1302.1 *The Technical Delegate (TD)*

1302.2 In order to qualify; a proposed member must hold a valid licence as a Technical Delegate of the FIS.

1302.3 For PWG, IPC Alpine Skiing will recommend the Technical Delegates to the IPC Governing Board for appointment.

1302.4 For WCH/WC/EC IPC Alpine Skiing will appoint the TD/TDs.

1302.5 For all other level of races the process will follow the IPCSB agreement with FIS.

1302.6 **Exclusions**

1302.7 A competitor cannot be a member of the Jury.

1302.8 *Tenure of the Jury*

The appointed Jury members gather for their first meeting prior to the first Team Captain's meeting.

1302.9 The active duty of the Jury begins with its first meeting and ends, if no protest is submitted, at the expiration of the protest deadline, otherwise after dealing with all submitted protests.

1302.10 *Voting*

The IPCSB Race Director is the chairman of the Jury. He/she conducts the Jury meetings. Each Jury member has a vote. In the absence of the IPCSB Race Director, the TD is the chair of the Jury.

1302.11 Decisions are made by simple majority vote of members present.

1302.12 In the case of a tie, the Chair of the Jury has the casting vote.

1302.13 Minutes are to be kept of all meetings and decisions of the Jury and signed by each individual member of the Jury, with each individual vote on decisions recorded.

The minutes must be written in English.

1302.14 In cases where an immediate decision must be made and it is not possible to convene the entire Jury, each member of the Jury has the right, prior to or during the race, to make decisions which according to the rules per se are reserved to

LISKI™
SPORT EQUIPMENT
MADE IN ITALY

FIS® SUPPLIER
IPC ALPINE SKIING
IPC NORDIC SKIING

World Snow Day
PREFERRED SUPPLIER

Winter Program
Worldwide experience

IPC ALPINE SKIING
IPC CROSS-COUNTRY SKIING

LISKI™
SPORT EQUIPMENT

LISKI srl
Via Veneto, 8
24041 BREMBATE (BG) ITALY

Tel. +39 035 4826195
Fax +39 035 4194192
www.liski.it
info@liski.it • liski@pec.it

the Jury as a whole; but only provisionally with the obligation to have the decision confirmed by the Jury as soon as possible.

1302.15 *Duties of the Jury*

The Jury monitors the adherence to the rules throughout the entire race, including the official training.

From a technical standpoint particularly by:
- Checking the race-course and training course conditions
- Checking the snow conditions
- Checking the final course preparation
- Checking course maintenance operations
- Approving the use of chemicals
- Checking the safety equipment installation like B fences, mats, air fences etc
- Checking the FOP signage and delimitation nets
- Checking the crowd control systems
- Checking the start, the finish and the run-out from the finish
- Checking the first aid service
- Checking the time equipment day before competition time
- Checking the venue requirements
- Checking on the location of the television towers according with safety and TV picture
- Asking and overviewing course testing
- Requiring course changes in case and overviewing the operations
- Appointing the course setters
- Fixing the time of course setting
- Overseeing the work of the course setters
- Spot-checking of the gate flags
- Opening or closing race courses for training after consideration of the technical preparations and the prevailing weather conditions
- Determining the method of the competitor's course inspection
- Inspection of the course before the race
- Determining the number of forerunners for each run and setting the start order of the forerunners
- Debriefing the forerunners as necessary
- Changing the start order after consideration of course conditions and in extraordinary conditions
- Changing the start intervals
- Giving instructions to and obtaining information from the gate judges

From an organisational viewpoint particularly by:
- Ranking of the competitors for the draw
- Division of the competitors without points into groups according to some

determined basis
- Granting of re-runs
- Cancellation of the race (beforehand), if snow conditions are unsuitable
- the recommendations of the Technical Advisor's report have not been carried out
- the first aid and medical service are inadequate or missing
- the crowd control is insufficient
- Shortening the course, if snow or weather conditions make this appear necessary
- Interruption/ Termination of the race if the prerequisites of article 1317 are present

From a disciplinary viewpoint particularly by:
- Decision on a proposal of the Technical Delegate or a Jury member to exclude a competitor for lack of physical and technical ability
- Enforcement of the checks on regulations concerning advertising on equipment and clothing in the competition area
- Decisions on limitation of quotas for officials, technicians and medical personnel for admission to the race-course
- Imposition of sanctions
- Decisions on protests
- Issue of particular directives throughout the entire event

1302.16 *Questions not Covered by Regulations*

In general, the Jury takes decisions on all questions not clarified by the Regulations

1302.17 *Radios*

At all competitions published in the IPCSB Calendar, the Jury members plus start and finish referee must be equipped with radios. These must function on a single reserved frequency and be free of interference.

1302.18 *Duties and rights of the referee*

- At the end of the first run, and again at the end of the race, the Referee will receive the Start and Finish Referees' reports, and any other official reports regarding breach of rules and disqualifications.
- Checks, signs and posts the Referee's Report on the official notice board at the end of each run, and at the end of the race, including a list of disqualified competitors, the gate numbers where the faults occurred, the name of the relevant gate judge or judges, and the exact time of the posting.
- Sends a report to IPCSB should unusual circumstances arise or in the event of a difference of opinion among the Jury members or in the case of severe injury to a competitor.

The Referee works very closely with the TD.

1303 The Technical Delegate (TD) and his duties

Works closely together with the IPCSB Race Director

1303.1 *Before the race*

- He reads the TD reports concerning previous events at the site and checks whether any improvements proposed in these reports have been carried out.
- Inspects the liability insurance certificate as required by article 309.3
- Reports when necessary to IPC Alpine Skiing & Snowboard
- Inspects the competition courses.
- Supervises official trainings.
- Spot checks the gate flags and poles.
- Collaborates in the administrative and technical preparations.
- Checks the official entry lists, including IPCSB points.
- Checks on the presence of sufficient radios for all members of the Jury (with separate frequencies).
- Takes note of the accreditation and the authorisation for entry to the competition course.
- Check the safety installations: mats, protection and delimitation fences
- Supervises the course setting together with the Jury.
- Supervises the locations of the first aid service along the course as well as the organisation of the medical care.
- Checks on all technical installations such as timekeeping, hand timing, communications, transport of people, etc.
- Is present in the race area during all official training.
- Takes part in all meetings of the Jury and of the team captains.
- Works closely together with the officials of the Organising Committee and the IPCSB Race Director.
- If necessary, appoints members to the Jury.

1303.2 *During the race*

- Must be present in the course area.
- Works closely with the Jury, the team captains and the coaches.
- Observes that the valid rules and directives with regard to advertising, on clothing and race equipment are obeyed.
- Supervises the technical and organisational conduct of the event.
- Advises the organisation concerning the observance of the IPCSB Rules and Regulations, and directives of the Jury.

1303.3 After the race

- Helps with the compilation of the Referee's report.
- Calculates the race and penalty points for the individual races. If the computer calculates these points, it is the TD's duty to re-check the points and to confirm their accuracy with his personal signature. Above all he checks the correct use of

the corresponding F value for each event.
- Presents properly submitted protests to the Jury for decision.
- Signs the official result lists provided by the race secretary and gives the authorisation for the award ceremony.
- Completes the TD report, including any supplementary reports and is responsible for their dispatch within three days to the FIS and the IPCSB.

1303.4 In general
- Decides on questions, which are not covered or are insufficiently covered by the IPCSB Rules, in so far as these have not already been decided by the Jury and do not fall within the scope of other authorities.
- Works very closely with the Referee..
- Has the right to propose to the Jury the exclusion of competitors from participating in the race.
- Has the right to obtain support from the Organising Committee and all Officials under its jurisdiction in all matters necessary for the fulfilment of his duties

1303.5 Course Builder / Course Technical Advisor

Works closely together with the IPC Snowboard Race Director and TD

1303.5.1 Duties of the Course Builder / Course Technical Advisor

- Prepare design proposal working together with LOC, according with IPCSB course requirements (section 6), slope characteristics and ski resort/LOC resources.

- Prepare a building and maintenance plan (snow volume, number of shapers, snowcats number and type, time-frame, equipment list, working schedule etc)

- Propose offseason improvements (snowmaking, ground works, anchor points etc.)

- Build the course according with the design agreed and approved by Race Director

- If needed, propose modifications in agreement with Race Director and LOC

1303.6 IPC Alpine Skiing and Snowboard can appoint Technical Advisors to support the Jury. The Technical Advisor has no voting rights

1303.7 The IPC Alpine Skiing and Snowboard can impose sanctions against a Jury or individual Jury members.

1304 Gate Judges

1304.1 Every gate judge receives a check card with the following notations
- Name of the gate judge

- Number(s) of the gate(s)
- Designation of the run (1st, 2nd and 3rd / Qualification or Final)

1304.2 Each gate judge must have a thorough knowledge of the competition rules and must follow instructions of the Jury.

1304.3 It can happen that despite close observation of the competitions, a competent gate judge does not recognise, a fault committed by a competitor or judges a fault in error.

1304.4 When an adjacent gate judge, a member of the Jury or an official video controller makes a report concerning a competitor which differs from the notes of the gate judge in question, the Jury will freely interpret these notes in view of a possible sanctioning of a competitor or of a decision concerning a protest.
The decision handed down by the gate judge must be clear and non partisan. His conduct must be calm, watchful and prudent. In case of doubt, the gate judge should hold to the principle, “give the benefit of the doubt to the competitor”.

1304.5 If the gate judge is in doubt whether a fault has occurred, he can consult the adjacent gate judge in order to confirm their notes. He can even request via a member of the Jury that the competition be briefly interrupted, so that the tracks on the course may be checked.

1304.6 In all IPC Snowboard events the responsibility of the gate judge begins with the approaching of the competitor to the first gate he controls and ends when the competitor has passed through the last gate under their jurisdiction.

1304.7 Responsibility to the Competitor

1304.7.1 A competitor may in the case of an error or a fall, question the gate judge. The gate judge, where possible, must inform a competitor if he has committed a fault that would lead to a sanction / disqualification.

1304.7.2 In either case with a clear, decisive voice, the gate judge answers the competitor's question or informs him with one of the following words:
»Go!» if the competitor should expect no sanction / disqualification, since the gate judge has determined that the gate passage was correct;
»Back!» if the competitor may expect a sanction / disqualification.

1304.7.3 The competitors themselves are fully responsible for their actions and in this respect they cannot hold the gate judge liable.

1305 Course setter

1305.1 For PWG/WCH/WC/EC the IPC Alpine Skiing will appoint the course setters/ course builder.

1305.2 For the other competitions entered in the IPCSB and the FIS Calendar appointments are done by the Jury or Organizer.

1305.3 The course setter work is supervised by the IPC Snowboard Race Director

1305.4 **Replacement of course setters**

The replacement course setter should have the same qualifications as the original course setter.

1305.5 **Rights of the course setter**

Recommend the introduction of changes in the competition terrain and in the safety measures.

To oversee the availability of a sufficient number of helpers for the setting of the course, so that he can concentrate solely on the course setting.

To control that a provision of all necessary materials is provided by the chief of course equipment.

1305.6 **Duties of the course setter**

In order to set the course appropriately, respecting the terrain, the snow cover and the ability of the participating competitors, the course setter conducts a pre-inspection of the race terrain in the presence of the TD, the Referee, the Chief of Race, and the chief of course.

The course setter sets the race course respecting the existing safety measures and course preparation. The course setter must take speed control into consideration.

All courses must be set according to the IPCSB Snowboard Rule and Regulation Book

The courses must be set and ready. The competitors are not to be disturbed during course inspection.

The course setting is a task of the course setter alone. He is responsible for adhering to the rules of the IPCSB and may be advised by members of the Jury, and by the IPCSB Snowboard Race Director.

The course setters must participate in all team captains' meetings at which a report is to be made about his course.

1306 Forerunners

The organiser is obliged to provide at least three forerunners who have signed the IPCSB Eligibility Code Form. The forerunner is a member of the Organising Committee. The forerunners should participate in all training runs. In extraordinary conditions, the Jury may increase the number of forerunners.

The Jury may designate different forerunners for each run.

The forerunners must wear forerunner's start numbers (bibs).

The nominated forerunners should have enough riding ability to cover the course in a racing manner.

Forerunners are not permitted to start in the competition.

The Jury determines the forerunners and their start order. After an interruption of the race additional forerunners may be authorised as necessary.

The times of the forerunners should not be published.

Upon request the forerunners must report to members of the Jury regarding the snow conditions, the visibility and the race line, as the case requires.

1307 Start, finish, timing and calculations

Communication

In all international competitions, multiple communications (telephone or radios, etc.) between the start and finish must be in place. Voice communication between starter and finish must be assured by fixed wire connection or radio. In case of radio, this must be on a separate channel from that used by any other function of the OC.

1307.1 Timing Equipment

For timing all events in the IPCSB Calendar, electronic timers, start gates and photocells homologated by the FIS and approved by IPCSB must be used.

A list of these approved devices will be published. Races using timing equipment other than those on the homologated IPCSB list will not be considered for IPCSB points.

Timing procedures are as per FIS Timing Booklet Alpine Skiing.

http://data.fis-ski.com/alpine-skiing/timing-and-data.html

1308 Start and finish officials

1308.1 The Starter

The starter must synchronise his watch with those of the assistant starter and by telephone or radio with the chief timekeeper within ten minutes of the start. The starter is responsible for the warning signal and the start command as well as for the accuracy of the intervals between these signals. He assigns the supervision of the competitors to the assistant starter.

1308.2 The Finish Controller

The finish controller has the following duties:

- Supervision of the section between the last gate and the finish

- Recording of the order of finishing of all racers who complete the course

1309 The Start

1309.1 **The Start area**

The start area must be closed off to everyone except the starting competitors, accompanied by only one trainer and the start officials. The start area must be protected appropriately against inclement weather. A special roped off area must be provided for trainers, team captains, service personnel etc., in which they may take care of the waiting competitors without being interrupted by the public. An adequate shelter must be prepared for the competitors waiting for the call to start. Benches may be placed near the start gates to help the competitors in the preparations.

1309.2 The Start Ramp

The start ramp shall be prepared in such a way that the competitors can stand relaxed on the starting line and can quickly reach full speed after leaving the start. Push off posts will be installed on the starting installation for all IPC Alpine Skiing Snowboard events, the specifications will be adjusted to the needs of the specific event.

1309.3 Start Procedure

No official or attendant who could possibly give an advantage to or disturb the starting competitor may be behind him. All outside help is forbidden.

By order of the starter, the competitor must take his place behind the wand or start mechanism. The starter must not touch the competitor at the start. Pushing off from the start posts or other similar aids is allowed.

1309.4 Start Signals/Commands

For all single timed events (SBX, BSL) the start signal is as follows:

Ten seconds before the start, the starter will tell each competitor »Ten Seconds». Five seconds before the start, he shall count »5, 4, 3, 2, 1» and then give the start command »Go – Partez – Los».

If possible, an automatic audible signal is to be used. The starter will let the competitor see the start clock.

For SBX Finals the start command is as follows:

„Riders ready – attention" – randomly 1–4 seconds before the doors open (this 1–4 seconds is up to the starter).

1309.5 **Start timing**

The start timing shall measure the exact time the competitor crosses the start line with his leg below the knee

1309.6 **Delayed start**

A competitor who is not ready to start on time will be sanctioned. The start referee may however excuse such a delay if, in his opinion the delay is due to "force majeure". For example, breakdown of a competitor's personal equipment or minor sickness of a competitor does not constitute "force majeure".

In case of doubt, the Jury may allow the start provisionally.

1309.7 The start referee makes the decisions after consultation with the Jury and must record the start numbers and names of competitors who were not allowed to start because of late appearance, or who were allowed to start in spite of late appearance, or who were allowed to start provisionally.

1309.8 **Valid start and false start**

In competitions with a fixed start interval the competitor must start on the start signal. The start time is valid if it occurs within the following limits: 5 seconds before and 5 seconds after the official start time. A competitor who does not start within that space of time will be disqualified.

The start referee must inform the Referee of the start numbers and names of the competitors who made a false start or have contravened the starting rules.

1310 Course and competition

1310.1 **Course Setting**

1310.1.1 *Assistance*

Assistance must be provided for the course setter, at a time to be fixed by the Jury, so that he can concentrate on the actual course setting and not be distracted by fetching poles, etc.

The chief of course equipment must provide enough of the following:

- sufficient number of blue and red poles and stubbies
- a corresponding number of gate panels, divided by colours
- hammers, drills, gate-keys, wedges etc.
- colouring substance for marking the position of the poles

1310.1.2 Triangular banners position

All gates with triangular banners must be set in a right degree angle (90°) to the general fall line of the course.

1310.1.3 *Marking of the gates*
The positions of the gate poles may be marked with an easily recognisable colouring substance which remains visible throughout the entire race.

1310.1.5 *Marking of the course and terrain*

Coloured dye used vertically from gate to gate as well as horizontally across the course or the inside and/or outside of the racing line before and after the gate notably on the approaches indicating changes in terrain, jumps, etc.

1310.1.*6* *Spare Poles*
The chief of course equipment is responsible for the availability and correct placing of enough spare poles. The poles are to be placed so that the competitors are not mislead by them.

1310.1.7 *Closing and Modification of the Course*
A course is closed from the time the course setting begins. Nobody except for the Jury is permitted to change gates, gate panels, markings, etc. or modify the course structure (jumps, bumps, etc.) on a closed course.
Competitors are not permitted to enter a closed competition course.
Trainers, servicemen etc., who are allowed on a closed competition course are to be decided by the Jury.
Photographers and camera teams are allowed into the closed course area for the necessary documentation of the competition. Their total number can be limited by the Jury. They will be located by the Jury where possible and must remain only in this area.
The Jury or the Organising Committee may close a course or sections of a course to competitors, trainers, media and service personnel outside of the actual competition or training times for preparation and maintenance purposes.

1310.1.8 *Warm up Slope*
Appropriate warm up slopes should be made available.

1311 Competition

1311.1 *Passage of the Gates*

A gate has been passed correctly when the competitor has at least the front foot fixed in the bindings on the board and the entire board crosses the gate line. In case of a fall, the competitor must pass through the turning gate line.

The gate line in triangular banner Banked Slalom and Snowboard Cross is the extension of the line past the turning pole which connects the two points at the base of the banner.

In the event that a competitor removes a pole from it's vertical position before the competitor's board and both feet have passed the gate line, the board and feet still must pass the original gate line (dye marking in the snow). In the event that a gate pole or stubbie is missing the competitor is obligated to turn around the

original placement mark to be considered as having passed the gate correctly.

1311.2 *Interdiction to Continue after a Gate Fault*

If a competitor misses a gate, he must no longer continue through further gates.

1312 The Finish

1312.1 The Finish Area

The finish area must be plainly visible to the competitor approaching the finish. It must be wide, with a gently sloped smooth outrun. It must be prepared.

In setting the course with gates, particular attention shall be paid to directing competitors across the finish on a natural line adapted to the terrain.

1312.2 The finish area is to be completely fenced in. Any unauthorised entry must be prevented. Finish installations and closures should be set up or secured through suitable security protection measures.

1312.3 For competitors who have finished their runs, a special area, separated from the actual finish, is to be provided. In this area or corridor, it should be possible if applicable to make contact with the press (written and audiovisual).

1312.4 The Finish Line and its Markings

The finish line is marked by two posts or vertical banners which are connected by a horizontal banner.

In SBX and BSL the finish must be no less than 10 m wide.

In exceptional cases, the Jury can decrease this distance for technical and security reasons or because of the terrain. The width of the finish is considered to be the distance between the two finish posts or banners. The timing supports must also be at least this far apart and are to be protected. The timing supports can usually be placed directly behind the finish posts or banners, on the downhill side. The finish line must be clearly marked horizontally with colouring substance.

1312.5 Crossing the finish line

The finish line must be crossed:

- with at least one foot attached to the board

- with both feet in case of a fall in the immediate finish area. In this case the time is taken when any part of the competitor's body or equipment stops the timekeeping system.

- in Snowboard Cross the competitors place of finish is determined when any part of the body or snowboard crosses the finish line.

1313 Award ceremony

The LOC will arrange the Award ceremonies in consultation with IPC Alpine Skiing.

1313.1 In the event an organizer chooses a flower or medal ceremony before the protest time has expired, it will be at its own risk and responsibility.

1314 Starting order

1314.1 The valid IPCSB Snowboard points list must be used for the ranking of riders. The first group will consist of 8 and can be reduced to 4 if there are less than 10 riders or such other number as determined by the Jury.

1314.2 For Snowboard Cross and Banked Slalom a random manual draw will take place for the first group. The remaining competitors will be placed according to their ranking. All competitors without points will be drawn.

The Jury has the ability to change the start order.

1315 Start intervals

1315.1 **Start Intervals in IPCSB Snowboard Races**

The start can take place in each discipline at variable intervals as determined by the Jury.

1316 Re-runs

A competitor who is obstructed while racing must stop immediately after the incident takes place and report this to the nearest gate judge. He may apply to any member of the Jury for a re-run. The team captain of the obstructed competitor can also make this claim. The competitor should make his way to the Finish along the side of the course.

In special situations (e.g. in case of missing gates, failure of the timekeeping system or other technical failures), the Jury may order a rerun.

1316.1 **Grounds of interference**

1316.1.1 Blocking of the course by an official, a spectator, an animal or other obstruction.

1316.1.2 Blocking of the course by a fallen competitor who does not clear the course quickly enough.

1316.1.3 Objects in the course such as equipment of a previous competitor.

1316.1.4 Activities of the first aid service which obstruct the racer.

1316.1.5 Absence of a gate knocked down by a previous competitor that has not been promptly replaced.

1316.1.6 Other similar incidents beyond the will and control of the competitor, which cause significant loss of speed or a lengthening of the racing line and consequently affect the competitors time.

1316.2 **Validity of a re-run**

1316.2.1 If the Referee or another Jury member is unable to question the appropriate officials immediately or to judge the justification for the re-run he may grant a provisional re-run, to avoid delay for the competitor. This re-run will be valid only if it is subsequently confirmed by the Jury.

1316.2.2 If the competitor was already disqualified before the incident entitling him to a re-run, the re-run is not valid.

1316.2.3 The provisional or subsequently approved run remains valid even if it proves slower than the obstructed one.

1316.3 **Start time of re-run**

The competitor must report to the start referee. The start referee will inform the competitor the start position.

1317 Interruption or Termination of the run or training

If an interrupted run cannot be finished on the same day, it is to be treated as a terminated run.

1317.1 By the Jury

1317.2 to allow course maintenance or to allow a fairer and more consistent course for all competitors.

1317.3 for unfavourable or inconsistent weather and snow conditions

1317.4 The competition is to be restarted as soon as the work on the course has finished and if the weather and snow conditions have changed so that a fair competition can be assured.

1317.5 A repeated interruption of the race ordered for the same reason should lead to a termination.

1317.6 Brief Interruption. Each member of the Jury is entitled to order a brief interruption of the run, including at the request of a gate judge

1317.7 The Jury will terminate a competition:

- if the competitors are significantly affected by outside disturbing influences.

- if conditions arise that interfere with the fairness of the race or if the proper conduct of the race may no longer be guaranteed.

1318 Not permitted to start

A competitor will not be permitted to start in any IPCSB Snowboard International competition who:

1318.1 wears obscene names and/or symbols on clothing and equipment or behaves in an unsportsmanlike manner in the start area

1318.2 does not wear a crash helmet that conforms to the competition equipment specifications or has not signed the waiver for equipment if needed

1318.3 was disqualified, (DSQ) did not start (DNS), did not finish (DNF) or did not qualify (DNQ)

1319 Disqualifications

A competitor will be disqualified if he:

1319.1 participates in the race under false pretences

1319.2 jeopardises the security of persons or property or causes actual injury or damage

1319.1 Disqualification occurs if an athlete/guide does not pass through a gate correctly or does not start within the time limits.

1320 Competitions under artificial light

Competitions under artificial light are permitted and must be approved by IPC Alpine Skiing.

1321 Poles

All poles used in the Snowboard Cross (SBX), Banked Slalom (BSL) and Giant Slalom (GS) are subdivided into rigid poles and flex poles.

For IPCSB competitions the poles must conform to the FIS specifications.

1322 Gate flags

For IPCSB competitions the gate flags must conform to the FIS specifications.

Section 6: Specific rules for IPCSB Snowboard

1400 IPC Snowboard courses

1401 Technical data for Snowboard Cross (SBX)

1401.1 Snowboard Cross Head To Head (LEVEL 0)

1401.1.1 Vertical drop. Vertical drop min 100 m - max 200 m. Vertical drop of the course may be reported in the starting list and final results.

1401.1.2 Length of the course min 500 m max 1.000 m. Course angle average 12°± 3° / 20 – 25%. Running time of approximately 40 seconds to 70 seconds. Length of the course may be reported in the starting list and final results.

1401.1.3 Width: slope may be minimum 40 m wide. In special case IPC Snowboard Race Director can authorize exceptions for short parts of the course. Course Width may be minimum 10 m, recommended 12 m minimum

1401.1.4 Start section of course may be a straight line between start and first bank, The section should be designed so as to separate the competitors as quickly as possible after the star. Technical data: Minimum 80 m length, 6-8° angle of track after the start platform, minimum 10m width.

1401.2 Snowboard Cross Time Trial (LEVEL 1)

1401.2.1 Vertical drop. Vertical drop min 70 m - max 150 m. Vertical drop of the course may be reported in the starting list and final results.

1401.2.2 Length of the course min 400 m max 700 m. Course angle average 12°± 3° / 20 – 25%. Running time of approximately 30 seconds to 60 seconds. Length of the course may be reported in the starting list and final results.

1401.2.3 Width: slope may be minimum 40 m wide. In special case IPC Snowboard Race Director can authorize exceptions for short parts of the course. Course Width may be minimum 6 m, recommended 10 m minimum

1401.2.3 Start section of course may be a straight line between start and first bank. Technical data: minimum 40 m length, 6-8° angle of track after the start platform, minimum 6 m width.

1401.3 General characteristic and terrain: The slope may be preferable classified blue – red slope/ varying from 10 to 20 degree, according with the requirements above. Various terrain is preferable. Starting section and finish area are the first two elements that need to be fixed.

1401.4 The course may be designed and built to put in conditions the riders to generate speed and not to have to control it during the performance. Various changes of speed and rhythms along the course are preferable.

1401.5 The ideal IPCSB Snowboard Cross may allow the construction of any features excluding: gap jumps, corner jumps, spines and double spines, cutting banks, GS turns, negative banks. Basically it is important to avoid the features with different transverse take-off and landing angle, and the ones that require a change of direction on air. In any case competitor safety considerations and riding level of the athletes must always be a priority.

1401.6 The track may be closed to the public and training camps at least 24 hours before the competitions.

1402 Technical data for Banked Slalom (BSL) (LEVEL 0 – 1)

1402.1 Vertical drop min 100 m - max 250 m. Vertical drop of the course may be reported in the starting list and final results.

1402.2 Length of the course min 400 m - max 1000 m. Course angle average 15°± 3° / 20 – 35%. Running time of approximately 30 seconds to 90 seconds. Length of the course may be reported in the starting list and final results.

1402.3 Width: slope may be minimum 25 m. Course width minimum 4 m.

1402.4 General characteristic and terrain: it may be medium pitched slope. It may be preferably a natural various terrain, plenty of bumps and dips, preferably a U shape/natural valley.

1402.5 The course may be designed and built following the terrain profile, preferably using natural snow. Any features are allowed, but competitors safety considerations and riding level of the athletes must always be a priority.

1402.6 The track course may be built in a way that the competitors are able to ride keeping always the board parallel to the surface during the performance. In the turns appropriate banks may be built and shaped. Minimum distance between the banks/gates after the first gate may be minimum 14 m.

1402.7 The track may be closed to the public and training camps at least 24 hours before the event.

1403 Technical data for Giant Slalom (GS)

1403.1 Vertical drop min 80 m - max 200 m. Vertical drop of the course may be reported in the starting list and final results.

1403.2 Length of the course min 250 m - max 600 m. Course angle average 15°± 3° / 20 – 35%. Running time of approximately 30 seconds to 80 seconds. Length of the course may be reported in the starting list and final results.

1403.3 Width: slope may be minimum 30 m.

1403.4 Minimum distance between the gates may be 14 m.

1403.5 General characteristic and terrain: medium pitched slope, preferably with various grades.

1403.6 The course may be perfectly groomed and the snow surface may be compacted.

1404 Start

1404.1 Start ramp and start gates

1404 Course design. Course building and maintenance plan.

1404.1 Design of course has to be approved by IPC Snowboard Race Director in advance.

1404.2 The building and maintenance plan of the course may be agreed by all the parts and approved in advance by IPC Snowboard Race Director.

1405 Course testing

1405.1 Before the event, the Jury may allow an official course testing

1405.2 All the safety equipment may be installed on the course

1405.3 Medical staff may be on place during the course testing

1405.4 Only competitors are allowed to test the course, according with the equipment requirements (helmet is mandatory)

1405.5 The teams may communicate to IPCSB the riders list available for the course testing 7 days before the competitions

1405.6 Jury may select minimum 3 or maximum 5 riders based on: competitors availability, local national team athlete/athletes, world cup ranking, one per gender, different classes, turnover principle.

1405.7 Only the coaches may attend the course testing, according with JURY indications and they are allowed to film the course testing

1405.8 The course may be set and gates may be on place

1406 Gates and course setting.

1406.1 Gates

1406.1.1 A snowboard cross gate consists of one stubby flex pole (turning pole) and one long slalom pole (outside pole) which are connected with a triangular gate flag.

1406.1.2 Consecutive gates must alternate in colour except banana gates (which are considered to be one turn therefore one colour) that must be the same colour gates and flags.

1406.1.3 The gates must be set so that the competitors can distinguish between them clearly and quickly even at high speed. The triangular gate flag of a gate should be set at right angles to the racing line.

1406.1.4 In certain circumstances competitors may be required to pass between two gates of the same colour (for example: corridors).

1406.2 Course setting

1406.2.1 The setting of the gates must be done before the official inspection and training and should incorporate the skilful use of the terrain with the integration of terrain features and jumps into the setting.

1406.2.2 Minor adjustments in the setting may be necessary during the training to adjust the course for a smooth race line.

1406.2.3 Any changes made during training should be announced in the start area so all competitors and Team Captains are aware of any such changes.

1406.2.4 Giant Slalom (GS) second run may be reset on the same slope according with rule 1310. A new course setter is preferable.

1406.2.5 Immediately after the course setting, the coaches have the possibility to inspect the course according with Jury recommendation. In the finish area the coaches can provide their remarks or official protest to the Jury regarding the course preparation and course setting, before official inspection and training.

1407 Inspection/Training

1407.1 The competitors are allowed to inspect the course by slowly sliding down through or alongside the course. Inspection times are at the discretion of the Competition Jury but should be a minimum of 15 minutes. Competitors must visibly wear their start numbers and their helmets.

1407.2 At least one training run prior to the actual competition is mandatory normally the training session should be 1–2 hours in length and if possible should be held the day before the actual competition (under certain mitigating circumstances the competition Jury may decide other possibilities).

1408 Execution of Snowboard Cross (head to head event)

1408.1 Formats 2 competitors per heat (16 men/ 8 women) or such other numbers as determined by the Jury. Qualification runs have one competitor on the track at a time. Qualification normally involves two runs but the jury can decide. The timed qualification runs are be used to qualify competitors for the finals.

One Run Qualifications – all competitors take one (1) timed run.

Two Run Qualification – all competitors take two (2) times runs, the best time one (1) run out of two runs timed runs determined the qualification ranking.

A competitors who did not finish (DNF) or were disqualified (DSQ) in qualification run one (1) or did not start (DNS) can participate in qualification run two (2).

1408.2 In SBX there are 2 start gates on the start platform. One gate may be used as start of qualification run 1 and the other one for qualification run 2 in order to guarantee the same snow conditions of the track during the finals.

1408.3 For the 2nd qualification run the top **8** competitors (or 4) - both men and ladies will start in the same order compared to the 1st qualification run. Competitors with start numbers **9** and higher will keep the same start position for the 2nd qualification run. DNS, DNF or DQ with better points are starting first in this group.

1408.5 Ties in Qualification – if two or more competitors have the same best time, the tie will be broken by their total time of the two qualifications runs. If they are still tied, the ties will be broken using the highest IPCSB Snowboard points standing. If they are still tied all of the competitors will receive the same rank but the competitor with the higher bib number will be ordered first. The following tie-breaking rules do not apply to competitors who are tied for the qualification rank of (8 ladies or 16 men's place). If two or more competitors are tied, all competitors will run as many run-offs as required until the ties are broken. If this run-off format both (or more) competitors run together.

1408.6 In special event Jury can decide to change the format in 4 or 6 per heat.

1409 Finals Snowboard Cross (head to head event)

1409.1 Finals are based on 16 men / 8 ladies / 2 competitors per heat or such other numbers as determined by the Jury. In special circumstances 32 men and/or 16 ladies are allowed.

1409.2 In case there are less than 16 men/ 8 ladies competitors per class, the brackets may be defined following the indications below:

- 16 men – minimum 13 competitors on the starting list with 3 bye
- 8 men / ladies minimum 6 competitors in the starting list with 2 bye
- 4 men/ladies minimum 3 competitors in the starting list with 1 bye
- 2 men/ladies 2 competitors in the starting list

Jury can decide to define different brackets in case of special events.

1409.3 SBX will be run according to a single knockout format.

The first competitor (2 riders per heat) advance from round to round as determined by their place of finish in each heat. Place of finish is determined by the first part of the body or Snowboard that crosses the finish line. Whenever possible, a finish line camera (video or photo finish) should be available. In case of a tie, at the finish line, such tie(s) will be broken after reviewing if available the photo-finish presentation If a tie still exists, the competitors concerned will be ranked according to the fastest qualification time. In the case where the same qualification time exists (best time out of two runs), the tie will be broken by using the total time of both qualification runs. If a tie still exists, the competitor with the higher bib number (based upon qualifying time) will be scored as first.

The competitors who do not advance in 1/8 finals heats will be grouped according to their placing in the heat and then ranked within that group according to their qualifying time. In any case a competitor who has qualified for a certain group (1/8 final, 1/4 final, etc.) will remain in this group and be ranked there. For example: Once a competitor is qualified for top 16 they will remain for scoring purposes in the top 16 group.

Special events Jury can change the number of competitors advance from round to round

1409.4 Race Bibs

May be 2 different colours in each heat or numbered bibs with numbers on front, back and sleeves for better visibility by the course judges.

To aid in competitor identification, 2 different coloured leg bands may be used in addition to race bibs.

Special event it may be required more than 2 different colours.

1409.5 The competitors who drop out/DNS without communicating and motivating the decision in advance to a Jury before the qualification run 1 or 2 or the finals will be sanctioned

1410 Snowboard Cross (Head to Head events)

Pairings for the finals will be according to the following, excluding Special Event

1410.1 FINALS

Ranking for 8 heats/2 per heat (16) MEN

HEAT #	1st position	2nd position
1	1	16
2	8	9
3	5	12
4	4	13
5	3	14
6	6	11
7	7	10
8	2	15

Ranking for 4 heats/2 per heat (8) LADIES

HEAT #	1st position	2nd position

1	1	8
2	4	5
3	3	6
4	2	7

1411 Final Ranking

1411.1 Competitors are ranked according to their place of finish in the final heat and in the consolation round. All remaining competitors' are ranked according to the round they go out in (e.g. quarter finals) and their qualification times within that round.

1411.2 DNS, DSQ, DNF in SBX Finals

If a competitor does not start in the round of 16 or the round of 8 they will be automatically ranked. If two or more competitors do not start, the DNS competitors only will be ranked according to their qualification times and so on with 3 or more DNS competitors. Order of placing – DNF/DSQ (sports disqualification to be ranked 4th place in the heat according to the qualification time. If two competitors are DNF/DSQ, they will be ranked in the heat on 3rd/4th position according to their qualification time. DSQ (intentional contact, etc.) to be ranked second at the end of the 4th ranked athletes and DNS to be ranked last.

Average points	Entry points	Applied Scales	Race levels
230	211	220	2,3,4
231	231	240	2,3,4
310	306	320	2,3
400*	381	260 (360) level 4 (3) races cannot be better than 260 (360) points	4 (3)

* IPCSB International competitions or IPCSB National Championships.

1412 Execution of Snowboard Cross, Banked Slalom and Giant Slalom (Time trail events)

1412.1 Format with single competitor timed runs

1412.1.1 Timed runs are used to rank competitors, with one competitor on course at a time.

1412.1.2 LEVEL 0 – 1 All competitors take three (3) timed runs for SBX - BSL – The best (fastest) timed run out of three (3) timed runs will be used to determine the final results. Under special circumstances jury may allow format with two (2) timed runs, best (fastest) timed run out of two (2) will be used to determine the final results. This jury decision should be announced on TC meeting before competition.

All competitors take two (2) timed runs for GS. The two times will be combined and used to determinate the final results.

1412.1.3 Start list 1st run: Random draw of best **8 (or 4)** by IPCSB Snowboard points, done on TC meeting.

1412.1.4 Start list 2nd run: Same order as athletes in 1st run.

DNF, DQ and DNS from 1st run are starting last, ordered by IPCSB points. DNS or DNF or DQ with better points are starting first in this group.

If there are less than 8 (or 5) competitors per class, the competitors who are ranked DNF, DNS or DSQ on the 1st run, they may be considered as last in the result list and they may be reversed in the new starting list. DNS, DNF or DQ with better points are starting after in this group.

1412.1.5 Start list 3rd run: Same order as athletes in 1st run.

Athletes with DNF, DQ and DNS (2nd run) are starting last in 3rd run ordered by their result from one of the runs they have completed (there must be at least one run completed).

DNF, DQ and DNS in one of the 2 runs are starting last, ordered by IPCSB points. DNS or DNF or DQ with better points are starting first in this group.

If there are less than 8 competitors per class, the competitors who are ranked DNF, DNS or DSQ in one of the two runs, they may be considered as last in the result list and they may be reversed in the new starting list. DNS, DNF or DQ with better points are starting after in this group.

1412.1.6 The competitors who drop out/DNS without communicating and motivating the decision in advance to a Jury member before any run will be sanctioned

1412.2 Re-runs

A competitor, who is hindered, stopped or interfered while competing by the error of an official, by a spectator, by an animal, or by any other justifiable causes outside their control can apply to any member of the Jury for a re-run immediately after the occurrence of the interference.

This claim can also be made by the team captain of the hindered competitor.

The competitor must leave the course immediately or as soon as possible after the interference and may not continue riding further down in the course (only on the side of the course).

In case competitor does not leave the course and continue to race down to the finish line, request for re-run will be considered not valid.

In special situations or other technical failures i.e. failure of start gate(s) or timing systems), the Jury may order a re-run.

If a competitor is stopped by a yellow flag, he has the right to request a provisional rerun, under the condition that the Jury considers this possible from an organizational point of view. The jury should ensure that the competitor's provisional re-run takes place before the last competitor on the start list.

1412.2.1 Grounds for interference

Blocking of the course by an official, a spectator, an animal, or other hindrance.

Blocking of the course by a fallen competitor, who did not clear the course soon enough

Stopped with yellow flag by competition official for any reason

Objects in the course such as equipment of a previous competitor

Activities of the first aid service which hinder the competitor.

Absence of a non-marked gate knocked down by a previous competitor, and not promptly replaced

Other similar incidents, which, beyond the will and control of the competitor, cause significant loss of speed or affects the competitors performance and thereby can affect his result.

1412.2.2 Provisional re-run

In case the Referee or another Jury member is unable to question immediately the appropriate official or judge the justification for the provisional re-run request, he may, to avoid delay for the competitor or competition, grant a provisional re-run. This provisional rerun will be valid only if it is confirmed by the Jury.

If the competitor was already disqualified before the incident entitling him to request a provisional re-run, the request for the provisional re-run is deemed to be not valid.

The provisionally or definitively approved re-run remains valid even if it proves worse than the original run.

If the claim for provisional re-run is shown to be unjustified, the competitor will be subject to sanction(s).

1412.2.3 Start time of the re-run

In case of fixed start intervals, the competitor may start a re-run at the fixed interval, after he has reported to the start referee. The start referee's should allow the competitor a reasonable amount of time to compose themselves prior to such start.

1412.3 Ties

If two (2) or more competitors have the same combined times, calculating the total time of their three (3) runs will break the tie. Ties in two (2) timed runs format will be broken by their total time of two (2) runs. If they are still tied, the tie will be broken using the IPCSB SBX Points list. If the tie cannot be broken, they will receive the same ranking and IPCSB SBX Points but the competitor with the higher start number shall be listed first on the official list of results.

1412.4 Gate judges

Between 4-8 gate judges (with control section gate judges being provided radios connected with the Finish Referee and the rest of the Jury) on a SBX is necessary. Control section gate judges must be familiar with the rules (Inspection, Training, Gate-DSQ´s, Contact etc.).

1413 Race points calculation process

For every international competition registered in the IPCSB calendar, IPCSB points are awarded from 1st place down to 90% of the ranked competitors or 100th place, whichever is the lower number.

The calculated 90% will be always rounded up (e.g. 41.1% becomes 42).

1413.1 Point-Scales

Points will be awarded according to the following scales:

The point values for all scales are based on the same percentage points awarded as in scale 1000 for 1st, 2nd , 3rd , 4th , 5th , ...99th , 100th place in relation to the first place.

1413.2 Competition levels and corresponding scales

1413.2.1 Level 1 competitions: Scale 1000

Paralympic Winter Games, World Championships, World Cup

1413.2.2 Level 2 competitions: Scale 500 to scale 50

Continental Cups

1413.2.3 Level 3 competitions: Scale 360 to scale 50

National Championships

1413.2.4 Level 4 competitions Scale 260 to scale 50

IPCSB International competitions

1413.2.5 Selection of the scale for level 2 and level 3 competitions

The calculation to apply the point scale is based on the average of the best 5 competitors points at start. The entry points give the scale to apply based on the average points.

To choose the best possible scale, the average point value must be equal to or higher than the corresponding entry point.

At an international IPCSB competition IPCSB points will be awarded if 5 competitors with or without IPCSB points have started and at least 3 have finished.

If only 3 or 4 competitors have finished the competition, the sum of their IPCSB Points is still divided by 5 to obtain the IPCSB points level for the competition. After the calculation of the average points, one of the scales, which are listed under item 1409, is selected.

1414 Point scales

Points will be awarded according to the following scales:

		Entry Points	1000	476	426	381	341	306	276	251	231	211
Pos.	**%**	**Scale**	**1000**	**500**	**450**	**400**	**360**	**320**	**290**	**260**	**240**	**220**
1	100		1000.000	500.000	450.000	400.000	360.000	320.000	290.000	260.000	240.000	220.000
2	80		800.000	400.000	360.000	320.000	288.000	256.000	232.000	208.000	192.000	176.000
3	60		600.000	300.000	270.000	240.000	216.000	192.000	174.000	156.000	144.000	132.000
4	50		500.000	250.000	225.000	200.000	180.000	160.000	145.000	130.000	120.000	110.000
5	45		450.000	225.000	202.500	180.000	162.000	144.000	130.500	117.000	108.000	99.000
6	40		400.000	200.000	180.000	160.000	144.000	128.000	116.000	104.000	96.000	88.000
7	36		360.000	180.000	162.000	144.000	129.600	115.200	104.400	93.600	86.400	79.200
8	32		320.000	160.000	144.000	128.000	115.200	102.400	92.800	83.200	76.800	70.400
9	29		290.000	145.000	130.500	116.000	104.400	92.800	84.100	75.400	69.600	63.800
10	26		260.000	130.000	117.000	104.000	93.600	83.200	75.400	67.600	62.400	57.200
11	24		240.000	120.000	108.000	96.000	86.400	76.800	69.600	62.400	57.600	52.800
12	22		220.000	110.000	99.000	88.000	79.200	70.400	63.800	57.200	52.800	48.400
13	20		200.000	100.000	90.000	80.000	72.000	64.000	58.000	52.000	48.000	44.000
14	18		180.000	90.000	81.000	72.000	64.800	57.600	52.200	46.800	43.200	39.600
15	16		160.000	80.000	72.000	64.000	57.600	51.200	46.400	41.600	38.400	35.200
16	15		150.000	75.000	67.500	60.000	54.000	48.000	43.500	39.000	36.000	33.000
17	14		140.000	70.000	63.000	56.000	50.400	44.800	40.600	36.400	33.600	30.800
18	13		130.000	65.000	58.500	52.000	46.800	41.600	37.700	33.800	31.200	28.600
19	12		120.000	60.000	54.000	48.000	43.200	38.400	34.800	31.200	28.800	26.400
20	11		110.000	55.000	49.500	44.000	39.600	35.200	31.900	28.600	26.400	24.200
21	10		100.000	50.000	45.000	40.000	36.000	32.000	29.000	26.000	24.000	22.000
22	9.0		90.000	45.000	40.500	36.000	32.400	28.800	26.100	23.400	21.600	19.800
23	8.0		80.000	40.000	36.000	32.000	28.800	25.600	23.200	20.800	19.200	17.600
24	7.0		70.000	35.000	31.500	28.000	25.200	22.400	20.300	18.200	16.800	15.400
25	6.0		60.000	30.000	27.000	24.000	21.600	19.200	17.400	15.600	14.400	13.200
26	5.0		50.000	25.000	22.500	20.000	18.000	16.000	14.500	13.000	12.000	11.000
27	4.5		45.000	22.500	20.250	18.000	16.200	14.400	13.050	11.700	10.800	9.900
28	4.0		40.000	20.000	18.000	16.000	14.400	12.800	11.600	10.400	9.600	8.800
29	3.6		36.000	18.000	16.200	14.400	12.960	11.520	10.440	9.360	8.640	7.920
30	3.2		32.000	16.000	14.400	12.800	11.520	10.240	9.280	8.320	7.680	7.040

		Entry Points	1000	476	426	381	341	306	276	251	231	211
Pos.	**%**	**Scale**	**1000**	**500**	**450**	**400**	**360**	**320**	**290**	**260**	**240**	**220**
31	2.8		28.000	14.000	12.600	11.200	10.080	8.960	8.120	7.280	6.720	6.160
32	2.6		26.000	13.000	11.700	10.400	9.360	8.320	7.540	6.760	6.240	5.720
33	2.4		24.000	12.000	10.800	9.600	8.640	7.680	6.960	6.240	5.760	5.280
34	2.2		22.000	11.000	9.900	8.800	7.920	7.040	6.380	5.720	5.280	4.840
35	2.0		20.000	10.000	9.000	8.000	7.200	6.400	5.800	5.200	4.800	4.400
36	1.97		19.700	9.850	8.865	7.880	7.092	6.304	5.713	5.122	4.728	4.334
37	1.94		19.400	9.700	8.730	7.760	6.984	6.208	5.626	5.044	4.656	4.268
38	1.91		19.100	9.550	8.595	7.640	6.876	6.112	5.539	4.966	4.584	4.202
39	1.88		18.800	9.400	8.460	7.520	6.768	6.016	5.452	4.888	4.512	4.136
40	1.85		18.500	9.250	8.325	7.400	6.660	5.920	5.365	4.810	4.440	4.070
41	1.82		18.200	9.100	8.190	7.280	6.552	5.824	5.278	4.732	4.368	4.004
42	1.79		17.900	8.950	8.055	7.160	6.444	5.728	5.191	4.654	4.296	3.938
43	1.76		17.600	8.800	7.920	7.040	6.336	5.632	5.104	4.576	4.224	3.872
44	1.73		17.300	8.650	7.785	6.920	6.228	5.536	5.017	4.498	4.152	3.806
45	1.70		17.000	8.500	7.650	6.800	6.120	5.440	4.930	4.420	4.080	3.740
46	1.67		16.700	8.350	7.515	6.680	6.012	5.344	4.843	4.342	4.008	3.674
47	1.64		16.400	8.200	7.380	6.560	5.904	5.248	4.756	4.264	3.936	3.608
48	1.61		16.100	8.050	7.245	6.440	5.796	5.152	4.669	4.186	3.864	3.542
49	1.58		15.800	7.900	7.110	6.320	5.688	5.056	4.582	4.108	3.792	3.476
50	1.55		15.500	7.750	6.975	6.200	5.580	4.960	4.495	4.030	3.720	3.410
51	1.52		15.200	7.600	6.840	6.080	5.472	4.864	4.408	3.952	3.648	3.344
52	1.49		14.900	7.450	6.705	5.960	5.364	4.768	4.321	3.874	3.576	3.278
53	1.46		14.600	7.300	6.570	5.840	5.256	4.672	4.234	3.796	3.504	3.212
54	1.43		14.300	7.150	6.435	5.720	5.148	4.576	4.147	3.718	3.432	3.146
55	1.40		14.000	7.000	6.300	5.600	5.040	4.480	4.060	3.640	3.360	3.080
56	1.37		13.700	6.850	6.165	5.480	4.932	4.384	3.973	3.562	3.288	3.014
57	1.34		13.400	6.700	6.030	5.360	4.824	4.288	3.886	3.484	3.216	2.948
58	1.31		13.100	6.550	5.895	5.240	4.716	4.192	3.799	3.406	3.144	2.882
59	1.28		12.800	6.400	5.760	5.120	4.608	4.096	3.712	3.328	3.072	2.816
60	1.25		12.500	6.250	5.625	5.000	4.500	4.000	3.625	3.250	3.000	2.750
61	1.22		12.200	6.100	5.490	4.880	4.392	3.904	3.538	3.172	2.928	2.684
62	1.19		11.900	5.950	5.355	4.760	4.284	3.808	3.451	3.094	2.856	2.618

		Entry Points	1000	476	426	381	341	306	276	251	231	211
Pos.	**%**	**Scale**	**1000**	**500**	**450**	**400**	**360**	**320**	**290**	**260**	**240**	**220**
63	1.16		11.600	5.800	5.220	4.640	4.176	3.712	3.364	3.016	2.784	2.552
64	1.13		11.300	5.650	5.085	4.520	4.068	3.616	3.277	2.938	2.712	2.486
65	1.10		11.000	5.500	4.950	4.400	3.960	3.520	3.190	2.860	2.640	2.420
66	1.07		10.700	5.350	4.815	4.280	3.852	3.424	3.103	2.782	2.568	2.354
67	1.04		10.400	5.200	4.680	4.160	3.744	3.328	3.016	2.704	2.496	2.288
68	1.01		10.100	5.050	4.545	4.040	3.636	3.232	2.929	2.626	2.424	2.222
69	0.98		9.800	4.900	4.410	3.920	3.528	3.136	2.842	2.548	2.352	2.156
70	0.95		9.500	4.750	4.275	3.800	3.420	3.040	2.755	2.470	2.280	2.090
71	0.92		9.200	4.600	4.140	3.680	3.312	2.944	2.668	2.392	2.208	2.024
72	0.89		8.900	4.450	4.005	3.560	3.204	2.848	2.581	2.314	2.136	1.958
73	0.86		8.600	4.300	3.870	3.440	3.096	2.752	2.494	2.236	2.064	1.892
74	0.83		8.300	4.150	3.735	3.320	2.988	2.656	2.407	2.158	1.992	1.826
75	0.80		8.000	4.000	3.600	3.200	2.880	2.560	2.320	2.080	1.920	1.760
76	0.77		7.700	3.850	3.465	3.080	2.772	2.464	2.233	2.002	1.848	1.694
77	0.74		7.400	3.700	3.330	2.960	2.664	2.368	2.146	1.924	1.776	1.628
78	0.71		7.100	3.550	3.195	2.840	2.556	2.272	2.059	1.846	1.704	1.562
79	0.68		6.800	3.400	3.060	2.720	2.448	2.176	1.972	1.768	1.632	1.496
80	0.65		6.500	3.250	2.925	2.600	2.340	2.080	1.885	1.690	1.560	1.430
81	0.62		6.200	3.100	2.790	2.480	2.232	1.984	1.798	1.612	1.488	1.364
82	0.59		5.900	2.950	2.655	2.360	2.124	1.888	1.711	1.534	1.416	1.298
83	0.56		5.600	2.800	2.520	2.240	2.016	1.792	1.624	1.456	1.344	1.232
84	0.53		5.300	2.650	2.385	2.120	1.908	1.696	1.537	1.378	1.272	1.166
85	0.50		5.000	2.500	2.250	2.000	1.800	1.600	1.450	1.300	1.200	1.100
86	0.47		4.700	2.350	2.115	1.880	1.692	1.504	1.363	1.222	1.128	1.034
87	0.44		4.400	2.200	1.980	1.760	1.584	1.408	1.276	1.144	1.056	0.968
88	0.41		4.100	2.050	1.845	1.640	1.476	1.312	1.189	1.066	0.984	0.902
89	0.38		3.800	1.900	1.710	1.520	1.368	1.216	1.102	0.988	0.912	0.836
90	0.35		3.500	1.750	1.575	1.400	1.260	1.120	1.015	0.910	0.840	0.770
91	0.32		3.200	1.600	1.440	1.280	1.152	1.024	0.928	0.832	0.768	0.704
92	0.29		2.900	1.450	1.305	1.160	1.044	0.928	0.841	0.754	0.696	0.638
93	0.26		2.600	1.300	1.170	1.040	0.936	0.832	0.754	0.676	0.624	0.572
94	0.23		2.300	1.150	1.035	0.920	0.828	0.736	0.667	0.598	0.552	0.506

		Entry Points	1000	476	426	381	341	306	276	251	231	211
Pos.	**%**	**Scale**	**1000**	**500**	**450**	**400**	**360**	**320**	**290**	**260**	**240**	**220**
95	0.20		2.000	1.000	0.900	0.800	0.720	0.640	0.580	0.520	0.480	0.440
96	0.17		1.700	0.850	0.765	0.680	0.612	0.544	0.493	0.442	0.408	0.374
97	0.14		1.400	0.700	0.630	0.560	0.504	0.448	0.406	0.364	0.336	0.308
98	0.11		1.100	0.550	0.495	0.440	0.396	0.352	0.319	0.286	0.264	0.242
99	0.08		0.800	0.400	0.360	0.320	0.288	0.256	0.232	0.208	0.192	0.176
100	0.05		0.500	0.250	0.225	0.200	0.180	0.160	0.145	0.130	0.120	0.110

		Entry Points	191	171	156	146	136	126	116	106	96	86	66	0
Pos.	**%**	**Scale**	**200**	**180**	**160**	**150**	**140**	**130**	**120**	**110**	**100**	**90**	**70**	**50**
1	100		200.000	180.000	160.000	150.000	140.000	130.000	120.000	110.000	100.000	90.000	70.000	50.000
2	80		160.000	144.000	128.000	120.000	112.000	104.000	96.000	88.000	80.000	72.000	56.000	40.000
3	60		120.000	108.000	96.000	90.000	84.000	78.000	72.000	66.000	60.000	54.000	42.000	30.000
4	50		100.000	90.000	80.000	75.000	70.000	65.000	60.000	55.000	50.000	45.000	35.000	25.000
5	45		90.000	81.000	72.000	67.500	63.000	58.500	54.000	49.500	45.000	40.500	31.500	22.500
6	40		80.000	72.000	64.000	60.000	56.000	52.000	48.000	44.000	40.000	36.000	28.000	20.000
7	36		72.000	64.800	57.600	54.000	50.400	46.800	43.200	39.600	36.000	32.400	25.200	18.000
8	32		64.000	57.600	51.200	48.000	44.800	41.600	38.400	35.200	32.000	28.800	22.400	16.000
9	29		58.000	52.200	46.400	43.500	40.600	37.700	34.800	31.900	29.000	26.100	20.300	14.500
10	26		52.000	46.800	41.600	39.000	36.400	33.800	31.200	28.600	26.000	23.400	18.200	13.000
11	24		48.000	43.200	38.400	36.000	33.600	31.200	28.800	26.400	24.000	21.600	16.800	12.000
12	22		44.000	39.600	35.200	33.000	30.800	28.600	26.400	24.200	22.000	19.800	15.400	11.000
13	20		40.000	36.000	32.000	30.000	28.000	26.000	24.000	22.000	20.000	18.000	14.000	10.000
14	18		36.000	32.400	28.800	27.000	25.200	23.400	21.600	19.800	18.000	16.200	12.600	9.000
15	16		32.000	28.800	25.600	24.000	22.400	20.800	19.200	17.600	16.000	14.400	11.200	8.000
16	15		30.000	27.000	24.000	22.500	21.000	19.500	18.000	16.500	15.000	13.500	10.500	7.500
17	14		28.000	25.200	22.400	21.000	19.600	18.200	16.800	15.400	14.000	12.600	9.800	7.000
18	13		26.000	23.400	20.800	19.500	18.200	16.900	15.600	14.300	13.000	11.700	9.100	6.500
19	12		24.000	21.600	19.200	18.000	16.800	15.600	14.400	13.200	12.000	10.800	8.400	6.000
20	11		22.000	19.800	17.600	16.500	15.400	14.300	13.200	12.100	11.000	9.900	7.700	5.500
21	10		20.000	18.000	16.000	15.000	14.000	13.000	12.000	11.000	10.000	9.000	7.000	5.000
22	9.0		18.000	16.200	14.400	13.500	12.600	11.700	10.800	9.900	9.000	8.100	6.300	4.500
23	8.0		16.000	14.400	12.800	12.000	11.200	10.400	9.600	8.800	8.000	7.200	5.600	4.000
24	7.0		14.000	12.600	11.200	10.500	9.800	9.100	8.400	7.700	7.000	6.300	4.900	3.500
25	6.0		12.000	10.800	9.600	9.000	8.400	7.800	7.200	6.600	6.000	5.400	4.200	3.000
26	5.0		10.000	9.000	8.000	7.500	7.000	6.500	6.000	5.500	5.000	4.500	3.500	2.500
27	4.5		9.000	8.100	7.200	6.750	6.300	5.850	5.400	4.950	4.500	4.050	3.150	2.250
28	4.0		8.000	7.200	6.400	6.000	5.600	5.200	4.800	4.400	4.000	3.600	2.800	2.000
29	3.6		7.200	6.480	5.760	5.400	5.040	4.680	4.320	3.960	3.600	3.240	2.520	1.800
30	3.2		6.400	5.760	5.120	4.800	4.480	4.160	3.840	3.520	3.200	2.880	2.240	1.600
31	2.8		5.600	5.040	4.480	4.200	3.920	3.640	3.360	3.080	2.800	2.520	1.960	1.400
32	2.6		5.200	4.680	4.160	3.900	3.640	3.380	3.120	2.860	2.600	2.340	1.820	1.300
33	2.4		4.800	4.320	3.840	3.600	3.360	3.120	2.880	2.640	2.400	2.160	1.680	1.200
34	2.2		4.400	3.960	3.520	3.300	3.080	2.860	2.640	2.420	2.200	1.980	1.540	1.100
35	2.0		4.000	3.600	3.200	3.000	2.800	2.600	2.400	2.200	2.000	1.800	1.400	1.000
36	1.97		3.940	3.546	3.152	2.955	2.758	2.561	2.364	2.167	1.970	1.773	1.379	0.985
37	1.94		3.880	3.492	3.104	2.910	2.716	2.522	2.328	2.134	1.940	1.746	1.358	0.970

		Entry Points	191	171	156	146	136	126	116	106	96	86	66	0
Pos.	**%**	**Scale**	**200**	**180**	**160**	**150**	**140**	**130**	**120**	**110**	**100**	**90**	**70**	**50**
38	1.91		3.820	3.438	3.056	2.865	2.674	2.483	2.292	2.101	1.910	1.719	1.337	0.955
39	1.88		3.760	3.384	3.008	2.820	2.632	2.444	2.256	2.068	1.880	1.692	1.316	0.940
40	1.85		3.700	3.330	2.960	2.775	2.590	2.405	2.220	2.035	1.850	1.665	1.295	0.925
41	1.82		3.640	3.276	2.912	2.730	2.548	2.366	2.184	2.002	1.820	1.638	1.274	0.910
42	1.79		3.580	3.222	2.864	2.685	2.506	2.327	2.148	1.969	1.790	1.611	1.253	0.895
43	1.76		3.520	3.168	2.816	2.640	2.464	2.288	2.112	1.936	1.760	1.584	1.232	0.880
44	1.73		3.460	3.114	2.768	2.595	2.422	2.249	2.076	1.903	1.730	1.557	1.211	0.865
45	1.70		3.400	3.060	2.720	2.550	2.380	2.210	2.040	1.870	1.700	1.530	1.190	0.850
46	1.67		3.340	3.006	2.672	2.505	2.338	2.171	2.004	1.837	1.670	1.503	1.169	0.835
47	1.64		3.280	2.952	2.624	2.460	2.296	2.132	1.968	1.804	1.640	1.476	1.148	0.820
48	1.61		3.220	2.898	2.576	2.415	2.254	2.093	1.932	1.771	1.610	1.449	1.127	0.805
49	1.58		3.160	2.844	2.528	2.370	2.212	2.054	1.896	1.738	1.580	1.422	1.106	0.790
50	1.55		3.100	2.790	2.480	2.325	2.170	2.015	1.860	1.705	1.550	1.395	1.085	0.775
51	1.52		3.040	2.736	2.432	2.280	2.128	1.976	1.824	1.672	1.520	1.368	1.064	0.760
52	1.49		2.980	2.682	2.384	2.235	2.086	1.937	1.788	1.639	1.490	1.341	1.043	0.745
53	1.46		2.920	2.628	2.336	2.190	2.044	1.898	1.752	1.606	1.460	1.314	1.022	0.730
54	1.43		2.860	2.574	2.288	2.145	2.002	1.859	1.716	1.573	1.430	1.287	1.001	0.715
55	1.40		2.800	2.520	2.240	2.100	1.960	1.820	1.680	1.540	1.400	1.260	0.980	0.700
56	1.37		2.740	2.466	2.192	2.055	1.918	1.781	1.644	1.507	1.370	1.233	0.959	0.685
57	1.34		2.680	2.412	2.144	2.010	1.876	1.742	1.608	1.474	1.340	1.206	0.938	0.670
58	1.31		2.620	2.358	2.096	1.965	1.834	1.703	1.572	1.441	1.310	1.179	0.917	0.655
59	1.28		2.560	2.304	2.048	1.920	1.792	1.664	1.536	1.408	1.280	1.152	0.896	0.640
60	1.25		2.500	2.250	2.000	1.875	1.750	1.625	1.500	1.375	1.250	1.125	0.875	0.625
61	1.22		2.440	2.196	1.952	1.830	1.708	1.586	1.464	1.342	1.220	1.098	0.854	0.610
62	1.19		2.380	2.142	1.904	1.785	1.666	1.547	1.428	1.309	1.190	1.071	0.833	0.595
63	1.16		2.320	2.088	1.856	1.740	1.624	1.508	1.392	1.276	1.160	1.044	0.812	0.580
64	1.13		2.260	2.034	1.808	1.695	1.582	1.469	1.356	1.243	1.130	1.017	0.791	0.565
65	1.10		2.200	1.980	1.760	1.650	1.540	1.430	1.320	1.210	1.100	0.990	0.770	0.550
66	1.07		2.140	1.926	1.712	1.605	1.498	1.391	1.284	1.177	1.070	0.963	0.749	0.535
67	1.04		2.080	1.872	1.664	1.560	1.456	1.352	1.248	1.144	1.040	0.936	0.728	0.520
68	1.01		2.020	1.818	1.616	1.515	1.414	1.313	1.212	1.111	1.010	0.909	0.707	0.505
69	0.98		1.960	1.764	1.568	1.470	1.372	1.274	1.176	1.078	0.980	0.882	0.686	0.490
70	0.95		1.900	1.710	1.520	1.425	1.330	1.235	1.140	1.045	0.950	0.855	0.665	0.475
71	0.92		1.840	1.656	1.472	1.380	1.288	1.196	1.104	1.012	0.920	0.828	0.644	0.460
72	0.89		1.780	1.602	1.424	1.335	1.246	1.157	1.068	0.979	0.890	0.801	0.623	0.445
73	0.86		1.720	1.548	1.376	1.290	1.204	1.118	1.032	0.946	0.860	0.774	0.602	0.430
74	0.83		1.660	1.494	1.328	1.245	1.162	1.079	0.996	0.913	0.830	0.747	0.581	0.415

		Entry Points	191	171	156	146	136	126	116	106	96	86	66	0
Pos.	**%**	**Scale**	**200**	**180**	**160**	**150**	**140**	**130**	**120**	**110**	**100**	**90**	**70**	**50**
75	0.80		1.600	1.440	1.280	1.200	1.120	1.040	0.960	0.880	0.800	0.720	0.560	0.400
76	0.77		1.540	1.386	1.232	1.155	1.078	1.001	0.924	0.847	0.770	0.693	0.539	0.385
77	0.74		1.480	1.332	1.184	1.110	1.036	0.962	0.888	0.814	0.740	0.666	0.518	0.370
78	0.71		1.420	1.278	1.136	1.065	0.994	0.923	0.852	0.781	0.710	0.639	0.497	0.355
79	0.68		1.360	1.224	1.088	1.020	0.952	0.884	0.816	0.748	0.680	0.612	0.476	0.340
80	0.65		1.300	1.170	1.040	0.975	0.910	0.845	0.780	0.715	0.650	0.585	0.455	0.325
81	0.62		1.240	1.116	0.992	0.930	0.868	0.806	0.744	0.682	0.620	0.558	0.434	0.310
82	0.59		1.180	1.062	0.944	0.885	0.826	0.767	0.708	0.649	0.590	0.531	0.413	0.295
83	0.56		1.120	1.008	0.896	0.840	0.784	0.728	0.672	0.616	0.560	0.504	0.392	0.280
84	0.53		1.060	0.954	0.848	0.795	0.742	0.689	0.636	0.583	0.530	0.477	0.371	0.265
85	0.50		1.000	0.900	0.800	0.750	0.700	0.650	0.600	0.550	0.500	0.450	0.350	0.250
86	0.47		0.940	0.846	0.752	0.705	0.658	0.611	0.564	0.517	0.470	0.423	0.329	0.235
87	0.44		0.880	0.792	0.704	0.660	0.616	0.572	0.528	0.484	0.440	0.396	0.308	0.220
88	0.41		0.820	0.738	0.656	0.615	0.574	0.533	0.492	0.451	0.410	0.369	0.287	0.205
89	0.38		0.760	0.684	0.608	0.570	0.532	0.494	0.456	0.418	0.380	0.342	0.266	0.190
90	0.35		0.700	0.630	0.560	0.525	0.490	0.455	0.420	0.385	0.350	0.315	0.245	0.175
91	0.32		0.640	0.576	0.512	0.480	0.448	0.416	0.384	0.352	0.320	0.288	0.224	0.160
92	0.29		0.580	0.522	0.464	0.435	0.406	0.377	0.348	0.319	0.290	0.261	0.203	0.145
93	0.26		0.520	0.468	0.416	0.390	0.364	0.338	0.312	0.286	0.260	0.234	0.182	0.130
94	0.23		0.460	0.414	0.368	0.345	0.322	0.299	0.276	0.253	0.230	0.207	0.161	0.115
95	0.20		0.400	0.360	0.320	0.300	0.280	0.260	0.240	0.220	0.200	0.180	0.140	0.100
96	0.17		0.340	0.306	0.272	0.255	0.238	0.221	0.204	0.187	0.170	0.153	0.119	0.085
97	0.14		0.280	0.252	0.224	0.210	0.196	0.182	0.168	0.154	0.140	0.126	0.098	0.070
98	0.11		0.220	0.198	0.176	0.165	0.154	0.143	0.132	0.121	0.110	0.099	0.077	0.055
99	0.08		0.160	0.144	0.128	0.120	0.112	0.104	0.096	0.088	0.080	0.072	0.056	0.040
100	0.05		0.100	0.090	0.080	0.075	0.070	0.065	0.060	0.055	0.050	0.045	0.035	0.025

1415 IPCSB SBX BSL TT Points calculation process

1415.1 Evaluated results

For each new list the average of the competitor's best two results from the previous 12 months will be calculated in order to give their IPCSB SBX Point on that list.

1415.2 No results

If a competitor does not have any valid results in the previous 12 months, a penalty of reducing the 40 % of the SBX points will be applied.

1415.3 One result

If a competitor has only one result in the previous 12 months, a penalty of reducing the 20 % of the SBX points will be applied

GLOSSARY OF ACRONYMS

SB	Snowboard
IPC	International Paralympic Committee
IPCSB	International Paralympic Committee Alpine Skiing
STC	Sport Technical Committee
WCH	Alpine Skiing World Championships
WC	World Cup
COC	Continental Cup
EC	European Cup
AC	Asian Cup
FIS	Fédération Internationale de Ski (International Ski Federation)
ICR	International Competition Rules (of FIS)
NORAM	North American Cup
NC	National Championship
NG	Number of Gates
NPC	National Paralympic Committee
NSF	National Ski Federation
LOC	Local Organizing Committee
PWG	Paralympic Winter Games
SHC	Southern Hemisphere Cup
TD	Technical Delegate
VD	Vertical Drop
TT	Time Trial
BSL	Banked Slalom
SBX	Snowboard Cross
HH	Head to Head
GS	Giant Slalom

International Paralympic Committee

Adenauerallee 212-214
53113 Bonn, Germany

Tel. +49 228 2097-200
Fax +49 228 2097-209

ipcsnowboard@paralympic.org
www.ipc-snowboard.org

© 2016 International Paralympic Committee – ALL RIGHTS RESERVED
Photo ©: Getty Images, Oriol Molas

CLASSIFICATION RULES
WHEELCHAIR CURLING

Wheelchair curling should be restricted to individuals with substantial demonstrable impairments in leg/gait function who use a wheelchair for daily mobility and who qualify within eligibility criteria.

The role of classification in wheelchair curling is to determine eligibility to compete.

International classification is undertaken before an Athlete takes part in international competition and is the responsibility of Classification Panel appointed by the World Curling Federation (WCF).

The purpose of classification in Paralympic Sport is to minimise the impact of impairment on the outcome of competition so that the Athletes who succeed in competition are those with the best anthropometry, physiology and psychology and who have enhanced them to best effect, training hard, with quality coaching.

It is intended that the Classification Rules for Wheelchair Curling will be in compliance with the Classification Code to which the World Curling Federation as the governing body was a signatory.

The World Curling Federation will maintain a Classification Master List of Athletes including the Athlete's name, date of birth, country, Sport Class and Sports Class Status.

The Classification Master List is used to identify Athletes that enter international competitions. The WCF makes the Classification Master List available to National Federations and relevant National Paralympic Committees (NPC).

CLASSIFICATION PERSONNEL

Classifiers will be registered medical practitioners or registered accredited physiotherapists/occupational therapist.

The WCF requires to see documentation confirming the professional qualifications of potential classifiers prior to appointment.

Classifiers will work as members of a classification panel which has 2 members so long as the number of classifiers trained for wheelchair curling and their geographical locations allow. There may be an interim requirement for classifiers to work alone at times until the appropriate expansion of classifiers occurs.

A Head of Classification, appointed by the WCF will have overall responsibility for international classification, classifier training and supervision, maintaining secure classification data and regularly updating it and ensuring such records are accurate, and liaising with all relevant external parties such as the International Paralympic Committee (IPC) Classification Committee, IPC Medical and Scientific Department and Organising Committees.

A Chief Classifier is appointed for a specific competition.

This may be the Head of Classification or it may be another fully certified international classifier.

The Chief Classifier will ensure that the classification rules are applied appropriately during a specific competition and that classification facilities are provided at the competition which allow high professional standards to be maintained.

Classifiers will be certified after undergoing training which includes both theoretical and practical aspects and an assessment of required competencies in carrying out classifications and applying the classification rules of wheelchair curling.

CONDUCT OF CLASSIFIERS

The role of the classifier is to act as an impartial evaluator in determining an Athletes eligibility and Sport Class Status. The integrity of Classification in the Paralympic movement rests on the professional conduct and behaviour of each individual classifier. It is important that confidence in the Classification Rules and the Classification Personnel is preserved and developed and that it is based on transparent and agreed standards of practice which define a meaningful set of guidelines for the professional conduct of classification personnel.

Classifiers should value and respect the Athletes and Athlete Support Personnel and treat them with understanding patience and dignity while being courteous, objective, honest and impartial in performing their classification duties.

Classifiers should accept responsibility for all actions and decisions taken and be open to discussion and interaction with Athletes and Athletic Support Personnel in accordance with the International Standards for Athlete Evaluation and the International Standard for Protest and Appeals.

Confidentiality of Athlete information must be maintained whenever possible according to the International Standards for Athlete Evaluation and Protests and Appeals.

Classifiers should respect the Classification Rules.

The Head of Classification shall maintain a list of certified classifiers and the events at which each has undertaken classification duties.

CRITERIA FOR ELIGIBILITY TO COMPETE

The Athlete must meet one of the following eligibility criteria to compete in the World Wheelchair Curling Championship, World Wheelchair Curling Qualification events and the Paralympic Winter Games, i.e. to obtain an International Classification.

Athletes with a confirmed classification 'C' prior to the adaption of the 2014 Version of the Classification Rules coming into force will not be require to be re classified.

1. LOSS OF POWER

Loss of power in the lower limbs so that any residual power in the legs is less than a total of 40 out of 80 points. The movements tested are

at the hips – flexion, extension, adduction, abduction

at the knees – flexion, extension

at the ankles – plantar flexion and dorsi flexion

Power will be rated according to the Oxford Scale – 0 - 5. Grade 1 and 2 will be counted as 0.

Examples: Spinal Cord Injury
Poliomyelitis
Transverse myelitis
Spina Bifida
Polyneuropathy

2. LOWER LIMB DEFICIENCY

Bilateral above ankle amputation
Unilateral hip disarticulation
Unilateral above knee amputation and muscle strength in the other leg of less than 25/40 defined as above

3. HYPERTONIA

Hypertonia in the lower limbs graded using the Ashworth Scale at grade 3 or grade 4 and sufficient to prevent all ambulation or limit it to very short distances indoors

Examples Cerebral Palsy

Hypertonia can be associated with levels of strength in the legs greater than

40/80 even although ambulation is severely limited and therefore it is reasonable to use the level of spasticity as a separate eligibility criterion.

4. INCOORDINATION

Incoordination in the lower limbs, possibly in combination with loss of strength and hypotonia with the objective signs of ataxia so that ambulation is prevented or limited to very short distances indoors.

Example Multiple Sclerosis
Cerebral Palsy

5. RESTRICTION OF MOVEMENT

Severe permanent loss of joint range of 50% or more across 2 or more of the large joints (hip, knee, ankle) in both legs.

Example Arthrogryposis

6. COMBINATION OF ABOVE IMPAIRMENT

Any combination of above impairment, which is severe enough to confine athlete to wheelchair for daily activity.

THE CLASSIFICATION PATHWAY

When attending for evaluation the Athlete is required to produce:

- Evidence of identity – passport
- Passport sized photograph
- Copies of medical documentation – for instance a report from General Practitioner or hospital giving a summary of the case and where necessary a translation into English.

The WCF may require an Athlete to provide detailed specialist medical documentation and the Chief Classifier has the discretion not to determine eligibility without this documentation. It is the responsibility of the National Federation to ensure that any Athlete whose impairment is the result of a rare or uncommon condition provides supporting specialist documentation in English when presenting the Athlete for evaluation.

Presentation for Evaluation

Athletes must dress appropriately and must bring all equipment including competition or daily use wheelchair, competition or daily use prosthesis or orthoses.

The Athlete may be accompanied by an interpreter and not more than one representative of the Athlete's NPC/National Federation.

If the Athlete has a health condition that produces pain which limits or prohibits full effort during evaluation it may not be appropriate for evaluation to take place at that time. It may be possible to reschedule the evaluation but ultimately the Athlete will not be eligible to compete at international level until such an evaluation is satisfactorily completed.

The Athlete must consent to evaluation by signing a CLASSIFICATION CONSENT FORM to indicate their willingness to be classified and confirm their agreement to provide full effort and cooperation during the classification process.

Physical Assessment

The classification panel should conduct a physical assessment of the Athlete. This will include but is not limited to the examination of motor power, muscle tone, coordination, range of movement and observation of any residual ability to ambulate.

Video footage and/or photography maybe utilised by the classification panel for all classification purposes connected to the competition.

Ineligibility

In circumstances where a Sport Class of Ineligible to compete is allocated by a classification panel the Athlete has the right to be examined again by a second classification panel immediately. If the second classification panel, whose members could not have taken part in the first evaluation confirms the ineligibility the Athlete will not be permitted to compete and will have no further protest option.

Outcome

A member of the Classification Panel will inform the Athlete of the panel's decision. It is expected that this will occur as soon as possible after the decision has been taken.

Written notification must be provided to the Athlete. A WCF Wheelchair Curling Classification Card is completed.

Post competition tasks

The Chief Classifier must complete a post competition report which is forwarded to the Head of Classification. The Head of Classification has the responsibility of updating the Classification Master List after each competition at which classification has taken place.

SPORT CLASS ALLOCATION

In Wheelchair Curling the allocation is either

- Eligible (WC-E)
- Non eligible (WC-NE)

SPORT CLASS STATUS ALLOCATION

Sport class status new (N)

Sport class status new (N) is assigned to an Athlete who has not been previously evaluated by an International Classification Panel.

Sport class status N Athletes include those who have been allocated a sport class by their National Federation for entry purposes.

Sport class N Athletes must complete evaluation prior to competing at World Wheelchair Curling Championships, World Wheelchair Curling Qualification Events or Paralympic Winter Games.

Sport class review (R)

Sport class review (R) status is assigned to an Athlete who has been previously evaluated by an International Classification Panel but for reasons determined by the WCF Head Classifier requires a review of their sport class for example because their condition appears to have changed.

Sport class status R Athletes must complete evaluation prior to competing at World Wheelchair Curling Championships, World Wheelchair Curling Qualification Events or Paralympic Winter Games.

Sport class confirmed (C)

Sport class status of confirmed (C) may only be allocated following evaluation by certified WCF classification panel/classifiers. When a wheelchair curler has confirmed status further evaluation is not required. The status of a confirmed Athlete cannot be protested by another NPC or NF after it comes into effect 24 hours after first appearance at the first international competition following the process of evaluation.

PROTESTS AND APPEALS

Definition – Protest

The procedure by which a formal objection to an Athlete's sports class is made and subsequently resolved.

An Athlete's sports class should generally only be protested once with the exception of Protests in Exceptional Circumstances.

The Chief Classifier may make a Protest in Exceptional Circumstances in respect of any Athlete at any time during or prior to a Competition if the Chief Classifier reasonably believes that an Athlete's Sport Class no longer reflects the Athlete's ability to compete equitably within that Sport Class.

Exceptional circumstances may result from:

- A change in the degrees of impairment of an Athlete;
- An Athlete demonstrating significantly less or greater ability prior to or during Competition which does not reflect the Athlete's current Sport Class;
- An error made by a Classification Panel which has led to the Athlete being allocated a Sport Class which is not keeping with the Athlete's ability; or
- Sport Class allocation criteria having changed since the Athlete's most recent evaluation.

The Chief Classifier shall advise the Athlete and relevant National Federation and/or National Paralympic Committee that a Protest is being made in Exceptional Circumstances.

Athlete Evaluation following a Protest shall follow the same process as described in these regulations. All relevant parties shall be notified of the Protest decision as quickly as possible following Athlete Evaluation.

A protest should not be resolved by the classification panel that was involved in the allocation of the sport class that is being protested.

Protests will generally be submitted during competitions and can be submitted by a designated representative of an NPC or NF or by the Chief Classifier.

Athletes who have undergone evaluation of eligibility either as new (N) or (R) designations can only be the subject of a protest within a period of 24 hours following first appearance at the first International Competition following evaluation. Protests must be submitted to the Chief Classifier within that period otherwise the protest will be void.

Athletes with a confirmed status cannot be the subject of a protest from an NPC/NF but can be the subject of a protest by the Chief Classifier.

DOCUMENTATION

A protest form which should include the following should be submitted in English.

- The name and nation of the Athlete whose eligibility is being protested
- Details of the decision being protested
- The reason for the protest
- Any documents and other evidence to be offered in support of the protest
- The signature of the NPC/NF representative or the Chief Classifier
- A fee of 100 USD which will be returned if the protest is successful.

If the protest has been submitted without all necessary information it shall be dismissed by the Chief Classifier.

PROTEST PANEL

- Appointed by the Chief Classifier
- Minimum of 2 members. There may be an interim requirement for classifiers to work alone at times until the appropriate expansion of classifiers occurs.
- Those members were not involved in the previous evaluation
- All documentation submitted with the Protest Form shall be provided to the Protest Panel
- The Protest Panel should conduct the protest evaluation without reference to the Classification Panel which conducted the initial evaluation
- The Protest Panel may seek medical, sport or scientific expertise in reviewing an Athletes sport class

Communication of outcome

All relevant parties should be notified of the Protest decision in writing and as soon as possible after the Protest Panel have performed their evaluation.

The Classification Master List may require to be updated.

APPEALS

Definition – Appeal

A procedure by which a formal objection to the manner in which classification procedures have been conducted is submitted and subsequently resolved.

The Appeal Body shall have the jurisdiction to review classification decisions in order to

- Ensure all appropriate sports class allocation procedures have been followed
- Ensure all appropriate protest procedures have been followed

BUT no appeal body shall have jurisdiction to review the merits of an allocation of Sport Class or Sport Class Status and under no circumstances shall the appeal body modify a classification decision by allocating a new Sport Class or Sport Class Status.

The Appeal Body shall hear appeals only in cases in which all other available remedies including but not limited to protest procedures have been exhausted. Upon receipt of a notice of appeal the WCF shall conduct a review to determine whether all other available remedies have been exhausted by the party bringing the appeal. If all other remedies have not been exhausted the WCF shall issue a written decision dismissing the appeal.

The Notice of Appeal must

- Specify the party who is requesting the appeal
- Provide the name of the Athlete whose sport class or sport class status is the subject of the appeal
- Identify the decision being appealed by attaching a copy of the decision if written or briefly summarising it.
- Specify the grounds for the appeal
- Identify all documents evidence and witnesses to be put forward in support of the appeal

The appeal body for all appeals submitted during a Paralympic Games is the IPC Board of Appeal of Classification. The WCF has the option to refer all appeals to this body in the period outside Paralympic Games. The Appeal Body members will at no stage have been involved with or have been informed of the dispute brought before the Appeal Body.

APPEAL BODY DECISION

Appeal proceedings are confidential.
The Appeal Body shall issue a written decision resolving any appeal after the hearing.
The decision shall be provided to all parties.
The Appeal decisions are final and not subject to any further appeal.

THE BASIS OF CLASSIFICATION

The WCF and the classifier body will promote and stimulate studies which endeavour to provide a scientific basis to underpin the scheme of classification. Such research would be expected to enhance confidence in the classification system and encourage its future development.

PRINCIPLES OF FAIR PLAY AND ACCOUNTABILITY

The WCF Classification Rules set out a consistent policy which puts the Athlete first and ensures fair play and contains mechanisms which protect the rights of all Athletes and of Classifiers in the evaluation of Athletes and a thorough system of Protests and Appeals, should there be any individual breakdown in the process of classification. The risk of such mistake occurring are substantially reduced by the programme of classifier training, assessment and ongoing development outlined above.

CLASSIFICATION RULES FOR WHEELCHAIR CURLING

The Classification Rules are included in the WCF wheelchair curling rules. All participants in the sport of wheelchair curling accept these rules as a condition of participation in wheelchair curling.

CLASSIFICATION DUTIES DURING COMPETITION

During a competition members of a Classification Panel should not have any responsibilities towards or attachment to a National Team/Squad.